ZT111
Quick Start Guide

PAP

P1127660-03EN

Zebra Technologies | 3 Overlook Point | Lincolnshire, IL 60069 USA
zebra.com

ZEBRA and the stylized Zebra head are trademarks of Zebra Technologies Corp., registered in many jurisdictions worldwide. All other trademarks are the property of their respective owners. © 2022 Zebra Technologies Corp. and/or its affiliates. All rights reserved.

① Install the Printer Driver

IMPORTANT

Go to zebra.com/zt111-info and install the driver for your printer.

zebra.com/zt111-info

The driver MUST be installed before connecting the printer to the computer, or it will cause complications. If your Microsoft Windows-based computer does not have the driver installed for this printer, download it from zebra.com/zt111-info and install it before continuing.

② Remove the Printer from the Box

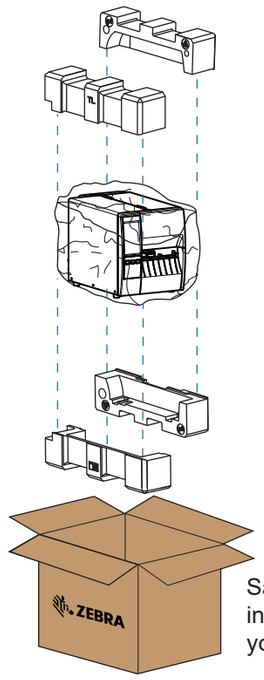

Verify that you have the items shown.

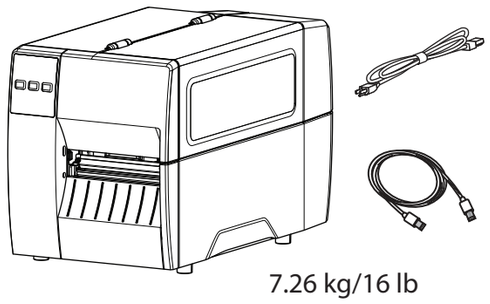

7.26 kg/16 lb

Save the box and packaging materials in case you need to store or ship your printer in the future.

③ Connect the USB Cable

a - Remove the port blocker label.
b - Connect the USB cable to the printer and your computer.

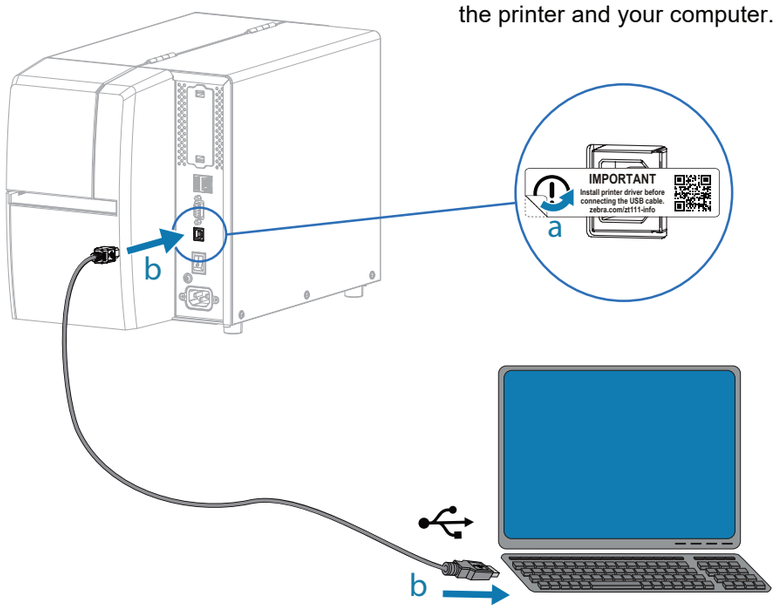

④ Plug the Printer into an Electrical Outlet

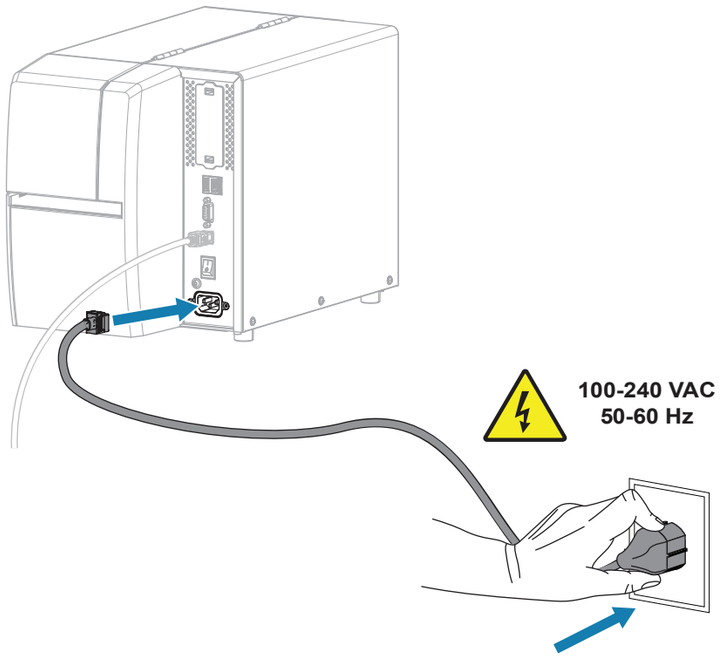

⑤ Turn on the Printer Power

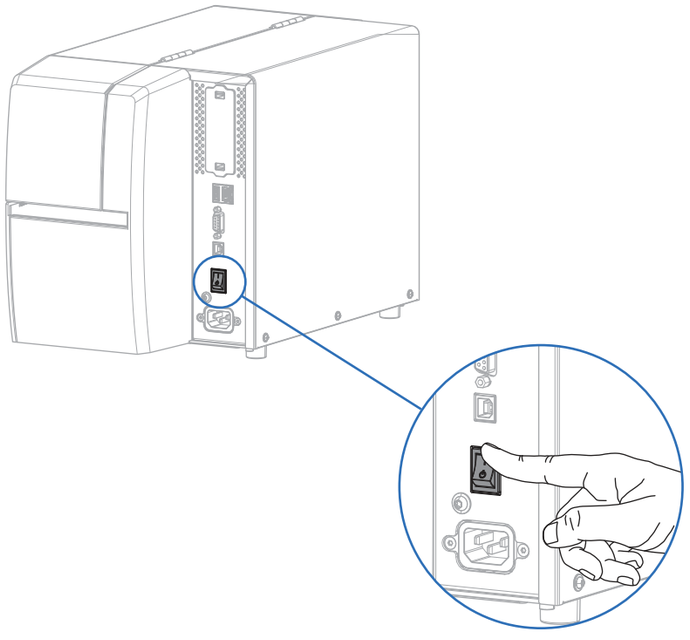

⑥ Open the Media Cover

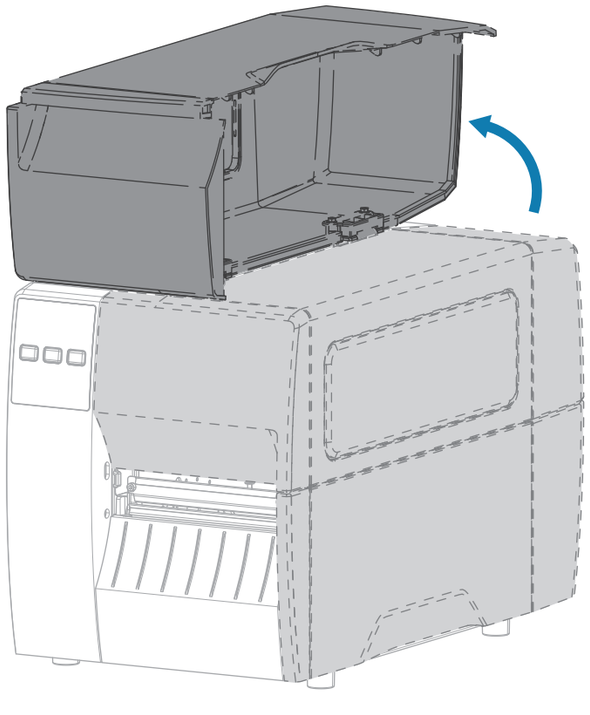

⑦ Release the Printhead Assembly

Rotate the printhead latch (a) to release the printhead assembly (b).

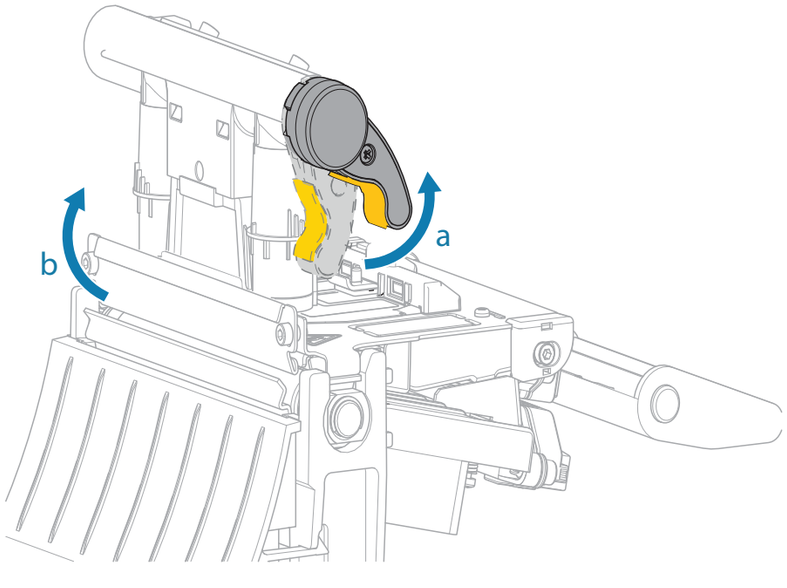

⑧ Remove Damaged Labels

Remove and discard any dirty or torn labels.

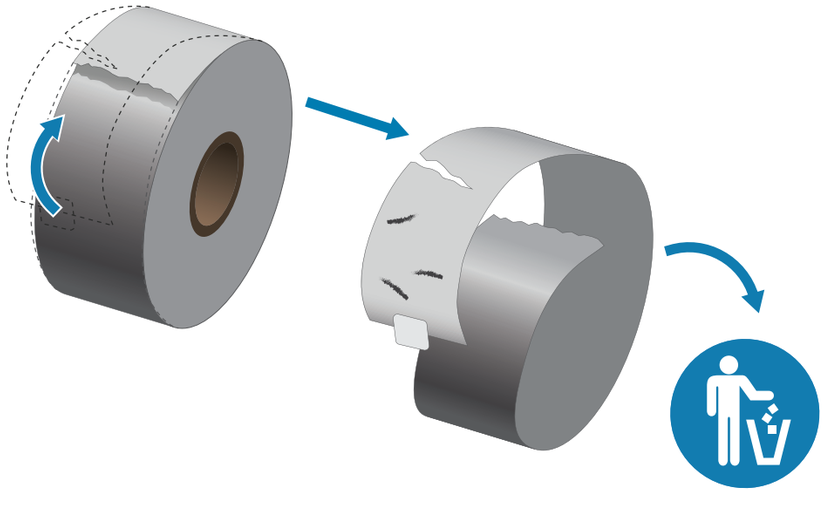

9 Load Media

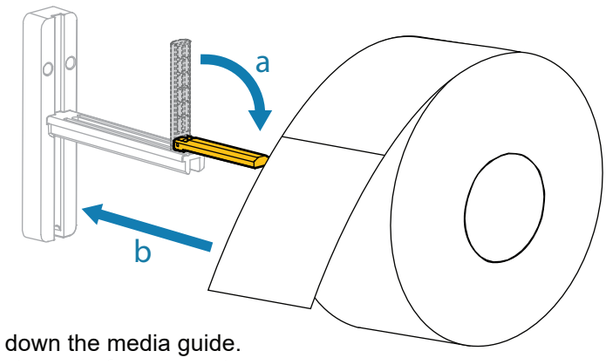

a - Fold down the media guide.
b - Hang the roll of media on the media hanger.

Fold up the media guide, and then slide it in until it almost touches the edge of the media.

Watch the video

Navigate to zebra.com/zt111-info. Watch the video **ZT111 Ribbon and Media Load**

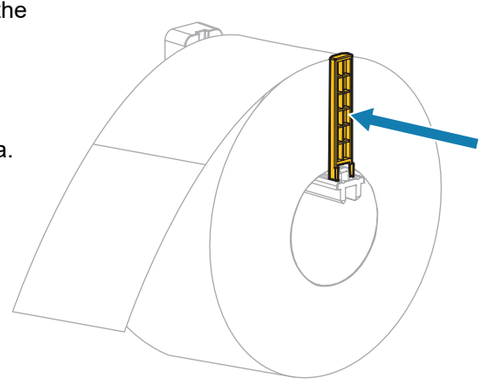

Feed the media as shown:
a - Under the black media dancer.
b - Inside the gap sensor.
c - Under the inner media guide.

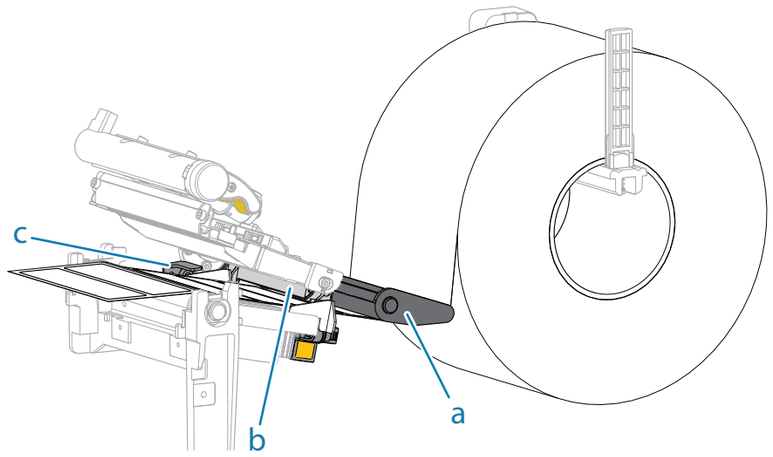

Adjust the outer media guide until it almost touches the edge of the media.

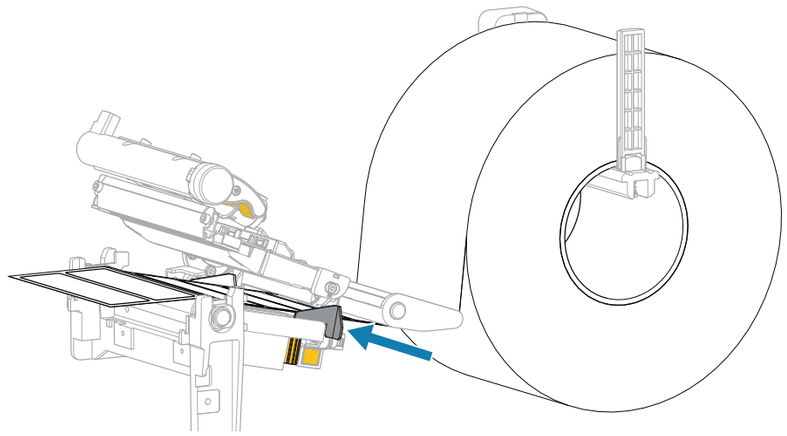

10 Load Ribbon

Place the ribbon on the ribbon supply spindle as shown. Push the roll back as far as it will go.

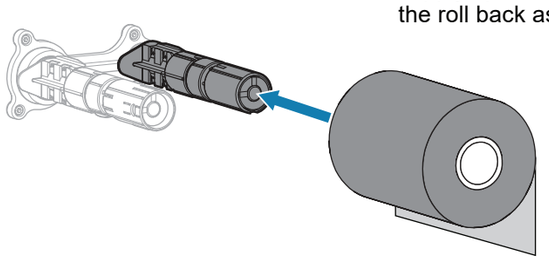

Place an empty core on the ribbon take-up spindle as shown. Push the core back as far as it will go.

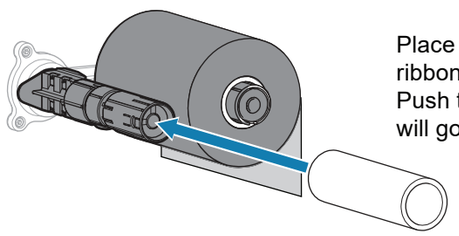

Feed the ribbon as shown.

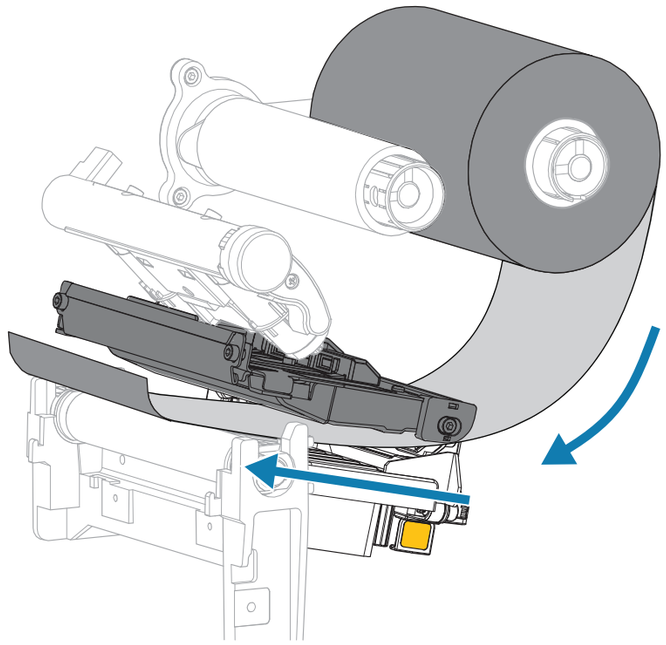

Wrap the ribbon around the core several times, and then rotate the spindle to tighten and align the ribbon.

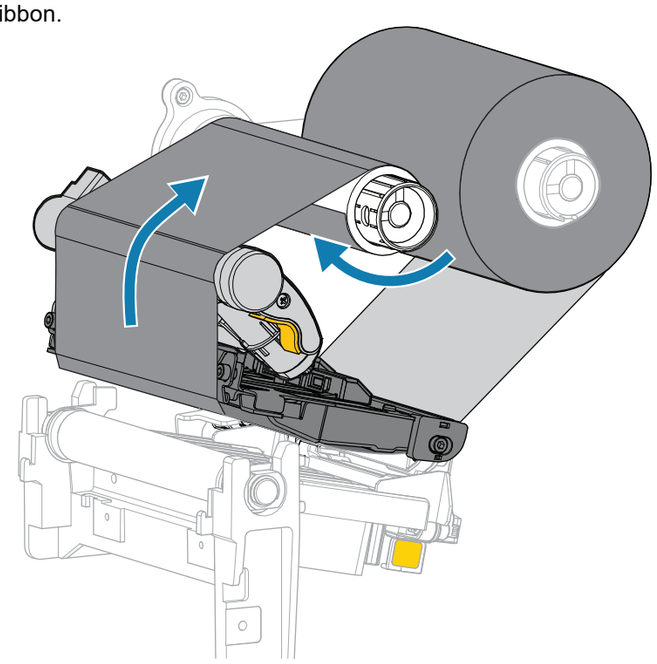

Support and information

View user documentation and how-to videos.
zebra.com/zt111-info

View Quick Answers and Knowledge Base.
zebra.com/knowledge

Need to design a label?
zebra.com/zebradesigner

Join Community Connection of Zebra users and ambassadors.
zebra.com/supportcommunity

Learn about genuine Zebra supplies.
zebra.com/supplies

Contact Zebra about your printer.
zebra.com/contactsupport

Need to manage your printer?
zebra.com/profilemanager

Need to secure your printer?
zebra.com/printsecure

ZEBRA

11 Prepare for Printing

Rotate the printhead lever down to close the printhead.

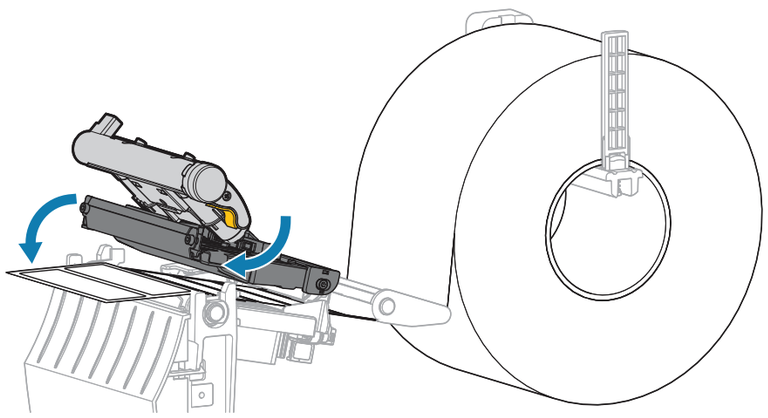

Close the media cover.

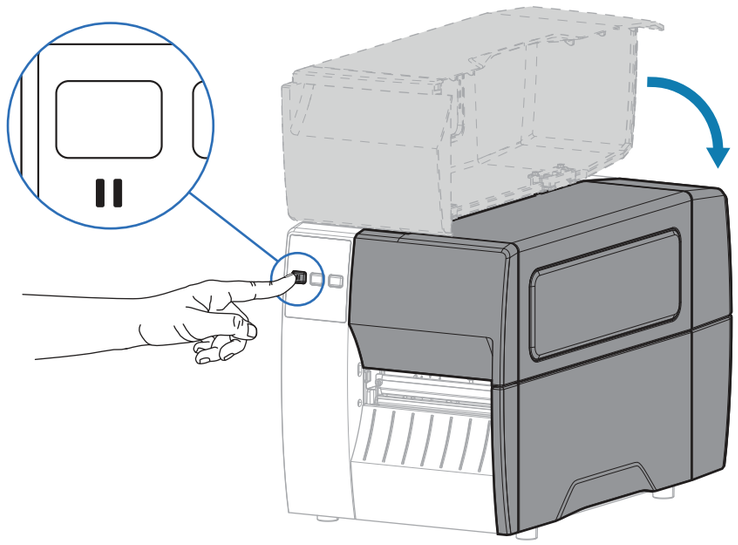

Press **PAUSE**.
- The printer auto-calibrates and several labels feed.
- The ribbon tightens and aligns on the printhead.