MINDEO

MP168 Screen Barcode Image Platform

User Manual

Version: MP168_UM_EN_V1.1.1

Notice

⚠	Ensure that the optional DC adapter works at + 5 VDC, especially for the RS-232 interface cable.

1. All software, including firmware, furnished to the user is on a licensed basis.
2. The right is reserved to make changes to any software or product to improve reliability, function, or design.
3. The material in this manual is subject to change without notice.
4. A standard packing includes an image platform, and a CD (or a user manual).

Contents

1 Specifications **1**

1-1 Technical specifications 1

1-2 Default setting for each barcode 2

2 Getting started **3**

2-1 Dimensions 3

2-2 Introduction to installation 4

2-2-1 Installation - RS-232 4

2-2-2 Installation - USB 4

2-2-2 Installation – PS/2 5

3 Parameter programming **6**

3-1 Example 1: Single-parameter setting by scanning 1D barcodes 6

3-2 Example 2: Multiple-parameter setting by scanning a QR code barcode 7

3-3 Operate the platform by receiving command via UART 8

3-4 Interface selection 9

3-5 PS/2 interface 10

3-6 RS-232 interface 14

3-7 USB interface 16

3-8 Scan mode & some global settings 18

3-9 Indication 23

3-10 Decode illumination 24

3-11 Other settings 26

3-12 UPC-A 28

3-13 UPC-E 30

3-14 UPC-E1 32

3-15 EAN-13 (ISBN/ISSN) 34

3-16 EAN-8 36

3-17 Code 39 (Code 32, Trioptic Code 39) 38

3-18 Interleaved 2 of 5 41

3-19 Industrial 2 of 5 43

3-20 Matrix 2 of 5 44

3-21 Codabar 45

3-22 Code 128 47

3-23 UCC/EAN 128 49

3-24 ISBT 128 51

3-25 Code 93 52

3-26 Code 11 53

3-27 MSI/Plessey 55

3-28 UK/Plessey 57

3-29 China Post 58

3-30 GS1 DataBar (GS1 DataBar Truncated) 59

3-31 GS1 DataBar Limited 60

3-32 GS1 DataBar Expanded 61
3-33 China Finance 62
3-34 PDF417 65
3-35 MicroPDF417 66
3-36 QR Code 67
3-37 Data Matrix 68
3-38 Han Xin Code 69
3-39 Aztec Code 70
3-40 G1-G6 & C1-C3 & FN1 substitution string setting 71
3-41 G1-G4 string position & Code ID position 76
3-42 String transmission 77
4 Other settings 80
4-1 General settings 80
4-2 Volume of voice broadcast 81
5 Maintenance 82
6 ASCII Table 83
7 Barcode representing non-printable character 84
8 Test symbols 85
9 Return default parameters & firmware version list 88
10 Configuration alphanumeric entry barcode 89

1 Specifications

1-1 Technical specifications

Dimensions	Height × Width × Depth: 124.5 mm × 97.0 mm × 93.0 mm	
Weight	260 g, without cable	
Indicator	Speaker	
Interface	RS-232, PS/2, USB Keyboard, USB virtual COM	
Operating Mode	Auto-detection	
Programming Method	Reading special barcode	
Program Upgrade	Online	
Input Voltage	3.8 – 5.5 VDC	
Current	105 mA (standby) @ 5 VDC, 150 mA (scanning) @ 5 VDC	
Image Size	640 × 480 pixels	
Field of View	Horizontal: 40°, vertical: 30°	
Scanning Angle	± 58°, ± 65°, 360° (Skew, Pitch, Roll)	
Print Contrast	20% minimum reflectance difference	
Decoding Capability	1D: UPC-A, UPC-E, UPC-E1, EAN-13, EAN-8, ISBN (Bookland EAN), ISSN, Code 39, Code 39 full ASCII, Code 32, Trioptic Code 39, Interleaved 2 of 5, Industrial 2 of 5, Matrix 2 of 5, Codabar (NW7), Code 128, UCC/EAN 128, ISBT 128, Code 93, Code 11 (USD-8), MSI/Plessey, UK/Plessey, China Post, China Finance, GS1 DataBar (formerly RSS) variants	
	2D: PDF417, MicroPDF417, QR Code, DataMatrix, Han Xin Code, Aztec Code	
Minimum Resolution	1D (Code 39): 10mil, 2D (QR): 10mil	
Decoding Depth	10mil Code 39 (3 chars)	0 mm – 35 mm
	13mil UPC (6 chars)	0 mm – 55 mm
	20mil Code 39 (1 char)	0 mm – 90 mm
	10mil QR (20 chars)	0 mm – 10 mm
	20mil QR (20 chars)	0 mm – 50 mm
	Screen barcode (5.5-inch display)	0 mm – 320 mm
Temperature	-10° to 45°C (14° to 113°F), operating; -20° to 70°C (-4° to 158°F), storage	
Humidity	5% to 95% (non-condensing)	
Safety	EMC: EN55022, EN55024 Electrical Safety: EN60950-1 Photobiological Safety: EN62471:2008 Illumination: 0~100,000 LUX ESD Protection: ± 4 KV (contact discharge), ± 8 KV (air discharge) Sealing: IP52 Drop Resistance: Withstands multiple 1.5 m (4.9 ft.) drops to concrete	

1-2 Default setting for each barcode

Code type	Read enable	Check digit verification	Check digit transmission	Min. code length	Proprietary code ID	AIM code ID
UPC-A	√	√	√	(12)[2]	A	]Em
UPC-E	√	√	√	(8)[2]	D	]Em
UPC-E1	-	√	√	(8)[2]	D	]Em
EAN-13	√	√	√	(13)[2]	A	]Em
EAN-8	√	√	√	(8)[2]	C	]Em
ISBN (Bookland EAN) / ISSN[1]	√	√	√	(13)[2]	B	]Em
Code 39	√	-	-	1	M	]Am
Interleaved 2 of 5	√	-	-	6	I	]Im
Industrial 2 of 5	-	-	-	4	H	]Im
Matrix 2 of 5	√	-	-	6	X	]Im
Codabar	√	-	-	4	N	]Fm
Code 128	√	√	-	1	K	]Cm
UCC/EAN 128	√	√	-	1	K	]Cm
ISBT 128	√	√	-	1	K	]Cm
Code 93	√	√	-	1	L	]Gm
Code 11	-	√	-	4	V	-
MSI/Plessey	-	-	-	4	O	]Mm
UK/Plessey	-	√	-	1	U	]Mm
China Post	√	-	-	(11)[2]	T	]Im
China Finance	-	-	-	(10)[2]	Y	-
GS1 DataBar	√	-	-	(16)[2]	R	]em
GS1 DataBar Truncated[3]	√	-	-	(16)[2]	R	]em
GS1 DataBar Limited	√	-	-	(16)[2]	R	]em
GS1 DataBar Expanded	√	-	-	1	R	]em
PDF417	√	-	-	-	p	]Lm
MicroPDF417	-	-	-	-	p	]Lm
DataMatrix	√	-	-	-	d	]dm
QR code	√	-	-	-	q	]Qm
Han Xin Code	-	-	-	-	h	]X0
Aztec Code	-	-	-	-	a	]zm

Note: [1]The settings for ISBN/ISSN and EAN-13 must be the same except the code ID.

[2] Fixed-length barcodes.

[3]The settings for GS1 DataBar Truncated and GS1 DataBar must be the same.

2 Getting started

2-1 Dimensions

Units: mm

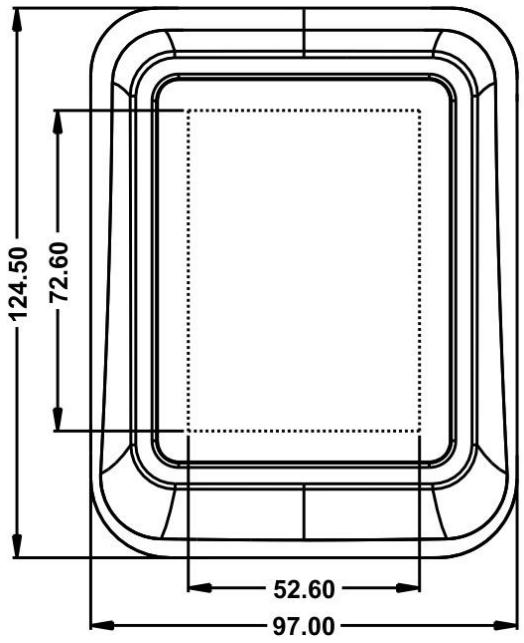

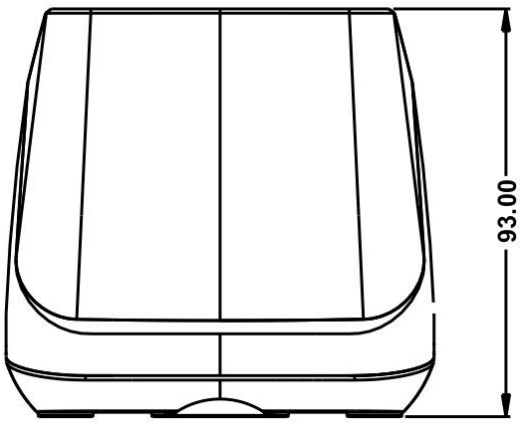

2-2 Introduction to installation

Note: If any of the below operation is incorrect, turn off the power immediately and check the platform for any improper connections. Go through all steps again.

2-2-1 Installation - RS-232

1) Connect the RS-232 interface cable to the bottom of the platform.
2) Connect the other end of the interface cable to the serial port on the host. Tighten the two screws to secure the connector to the port.
3) If the host does not have power supply (on PIN 9), connect the external power supply (DC adapter) to the RS-232 cable.

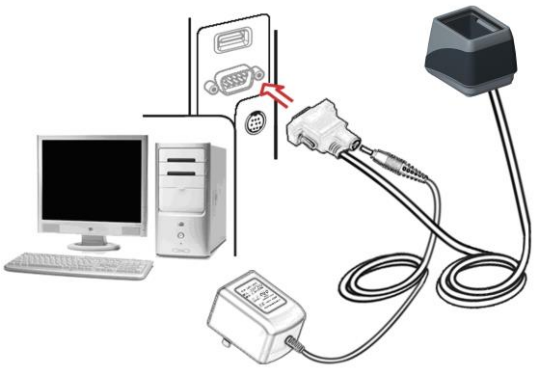

2-2-2 Installation - USB

The platform attaches directly to a USB host, and is powered by it. No additional power supply is required.

1) Cconnect the USB interface cable to the bottom of the platform.
2) Plug the series connector in the USB host, or an available port of the terminal.
3) Windows will automatically detect the USB device.

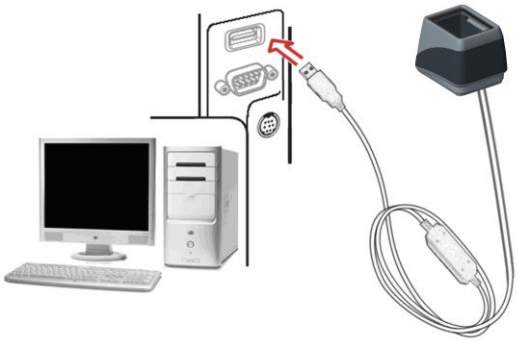

2-2-2 Installation – PS/2

The platform attaches directly to a USB host, and is powered by it. No additional power supply is required.

1) Connect the USB interface cable to the bottom of the platform.
2) Plug the series connector in the USB host, or an available port of the terminal.
3) Windows will automatically detect the USB device.

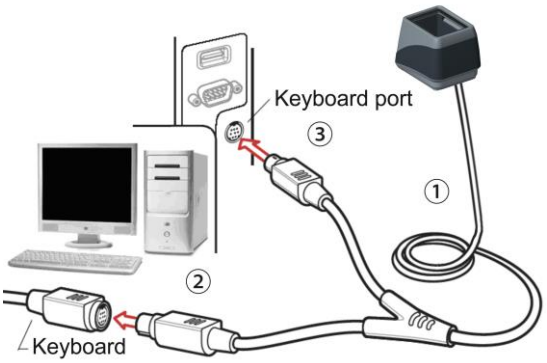

3 Parameter programming

3-1 Example 1: Single-parameter setting by scanning 1D barcodes

Important notes:

1) After each successful programming, the platform will beep twice.
2) Throughout the programming barcode menus, the factory default settings are indicated with asterisks (*).

Two programming modes have been provided as bellows:

❶ Single-scan setting

Scan the appropriate Single-scan setting (e.g. %0101D00%) according to the user's demand.

Example: To set Flow control to be XON/XOFF.

Steps: Scan the following barcode.

%0301D03%

❷ Multiple-scan setting

Step 1. Scan the Option barcode barcode (e.g. %0101M%) according to the user's demand.

Step 2. To the right of the option barcode, the necessary alphanumeric inputs are listed. Scan two alphanumeric entries from 0 to 9 or A to F, refer to 10 Configuration alphanumeric entry barcode.

Step 3. Repeat Step 2, if more user parameters input are required.

Step 4. Scan the %END% barcode, listed on the lower left hand corner of each parameter setting part.

Example: To set Flow control to be XON/XOFF.

Steps: Referring to 3-6 RS-232 interface, scan the following barcodes in order.

%0301M%

0

3

%END%

3-2 Example 2: Multiple-parameter setting by scanning a QR code barcode

User can customize a QR code barcode to set multiple parameters. The platform can set multiple parameters by scanning this single QR code barcode.

1. The data format of the QR code barcode is as following.

%	Parameter set 1	%	Parameter set 2	%	• • •	Parameter set N	%

<Option barcode index><D/H><Alpha. entries>

Note that:

- <Option barcode index> means the corresponding 4 digits of Option barcode.
- <D/H> means “D” or “H” character. D means that the type of alphanumeric entry is decimal; and H means that the type of alphanumeric entry is hexadecimal.
- <Alpha. entries> is a character string with various length of 2, 4, or other values.

Example: Set 0401->03 (decimal); 8002->0D0A (hexadecimal); 8202->01 (decimal). The customized QR code barcode contents and symbol are as following.

%0401D03%8002H0D0A%8202D01%

2. Notes of making QR code barcode

The model is chosen as M2. Other requirements, e.g. ECC level, Start mode, etc, are not specified.

Other notes:

1) The contents of a QR code barcode can include several same <Option barcode index> associated with same or different <Alpha. entries>. In the case of with different <Alpha. entries>, the latest <Alpha. entries> is the valid one.
2) If any one of the parameter settings is invalid, the total setting is failed. The invalid setting can be caused by one of the following problems: invalid <Option barcode index>, invalid type of <D/H>, invalid type, length or value range of <Alpha. entries>, etc.

3-3 Operate the platform by receiving command via UART

Note:

1- The information in this chapter is provided for the platform with RS232 cable or USB cable.

2- If the platform is with USB cable, the setting of USB device type must be set as "USB virtual COM". Please refer to 3-7 USB interface.

3- Please read 3-8 Scan mode & some global settings about the setting of Scanning mode in details.

UART parameter should be set as below:

(1) Baud rate: 9600 bps;

(2) Data bits: 8 bits;

(3) Stop bit: 1 bit;

(4) Parity check bit: None;

(5) Flow control: None.

Guide of control command: all commands are sent by UART

1) Start command: "0x54" (T)

When the platform received the above command, it will start barcode scanning following the setting of Scanning mode. If the platform is in the mode of "Auto-detection", the platform will have a single scan, then returns to "Auto-detection" mode.

2) Stop command: "0x50" (P)

If the Scanning mode is set as "Alternate continue" or "Continue", and the platform received the above command, it will stop barcode scanning and act as in an idle mode.

3) Restart command: "0x35" (R)

Once the platform received the above command, it will restart.

Returning message from the platform

1) A successful decode

Once the platform successfully decoded a barcode, the platform will stop scanning and returns the barcode data to the Host.

2) Not a successful decode

Once the platform failed to decode a barcode before stopping scanning, the platform will return a message to the Host. The message is set as "0x25, 0x25, 0x4E, 0x6F, 0x52, 0x65, 0x61, 0x64" (%%NoRead).

3-4 Interface selection

This platform supports interfaces such as RS-232 serial wedge, USB interface, and PS/2 interface. In most of the cases, simply selecting an appropriate cable provided by the manufacturer will work for a specific interface.

Interface selection:

Auto detection- By setting this function, the platform will automatically detect the RS-232 interface or USB interface or PS/2 interface for user.

Multiple-scan setting			Single-scan setting
Option barcode	Option	Alpha. entry	
Interface selection %0101M%	Auto detection(RS-232/USB/PS/2)	00*	%0101D00% *
	PS/2	01	%0101D01%
	RS-232	02	%0101D02%
	USB	03	%0101D03%

%END%

3-5 PS/2 interface

Keyboard type: As a keyboard interface, the platform supports most of the popular PCs and IBM terminals.

Keyboard layout: The platform supports different national keyboard layouts.

Clock period: According to the PS2 protocol, the clock is provided by the device, e.g. keyboard or platform, with the period between 60us to 100us.

Delay-after-compound-key: In some rare occasions, machine with low speed PS2 communication port would require a free time gap following the press/release of the compound key (Shift, Ctrl or Alt).

Numeric key:

Alphabetic key- the platform will output code result as alphabetic key.

Numeric key- the platform will output code result as pressing numeric keypad ('0', '1', '2', '3', '4', '5', '6', '7', '8', '9', '.', '+', '-', '/', '*' only).

Alt+ keypad- the platform will output code result as pressing Alt+ numeric key (on keypad). Note that the Num Lock control key must be ON. This setting can be specially adapted for use with different national keyboard layout.

Power-on simulation: All of the PCs check the keyboard status during power-on self test. It simulates keyboard timing and passes keyboard present status to the PC during power-on.

Inter-character delay: This delay is inserted after each data character transmitted.

Inter-byte delay: This delay is inserted after each byte transmitted. Normally a character is comprised of three or above bytes.

Block trans. delay: It is a delay timer between barcode data output. This feature is used to transfer continually with shorter barcode data.

Caps Lock reversion: By setting enable, the status of Caps Lock key (i.e. being pressed ON or OFF) on the keyboard is simulated in a reversion status.

Caps Lock override: If this function is enabled, on AT or AT notebook hosts, the keyboard ignores the state of the Caps Lock key. Therefore, an 'A' in the barcode is sent as an 'A' no matter what the state of the keyboard's Caps Lock key.

A guide of setting while the scanned data is incorrectly displayed on the host

- If some characters are missed or some additional characters are incorrectly displayed on the host, set the Inter-byte delay (0208) to be "01" or greater value.
- If some capital character (e.g. "A") or compound-key-characters (e.g."shift+", "Ctrl + ", "Alt+") are displayed incorrectly, set the Delay-after-compound-key (0204) to be "01" or greater value.
- If some digits are incorrectly displayed as some symbol characters (e.g. "1" and "2" are displayed incorrectly as "!" and "@"), set the Clock period (0203) to be greater value (e.g. 04, 05).

Multiple-scan setting			Single-scan setting
Option barcode	Option	Alpha. entry	
Keyboard type %0201M%	IBM AT, PS/2	00*	%0201D00% *
	Apple Mac compatibles	01	%0201D01%
Keyboard layout %0202M%	USA	00*	%0202D00% *
	Turkish F	01	%0202D01%
	Turkish Q	02	%0202D02%
	French	03	%0202D03%
	Italian	04	%0202D04%
	Spanish	05	%0202D05%
	Slovak	06	%0202D06%
	Denmark	07	%0202D07%
	Japanese	08	%0202D08%
	German	09	%0202D09%
	Belgian	10	%0202D10%
	Russian	11	%0202D11%
	Czech	12	%0202D12%
Character encoding system %0413M%	Refer to 3-8 Scan mode & some global settings.		
Clock period %0203M%	60 us	00	%0203D00%
	70 us	01	%0203D01%
	80 us	02*	%0203D02% *
	90 us	03	%0203D03%
	100 us	04	%0203D04%

Multiple-scan setting			Single-scan setting
Option barcode	Option	Alpha. entry	
	200 us	05	%0203D05%
Delay-after-compound-key %0204M%	0 ms	00*	%0204D00% *
	10 ms	01	%0204D01%
	20 ms	02	%0204D02%
	40 ms	03	%0204D03%
	80 ms	04	%0204D04%
Numeric key %0205M%	Alphabetic key	00*	%0205D00% *
	Numeric keypad	01	%0205D01%
	Alt+ keypad	02	%0205D02%
Power-on simulation %0206M%	Disable	00*	%0206D00%
	Enable	01	%0206D01%
Inter-character delay %0207M%	0 ms	00*	%0207D00% *
	5 ms	01	%0207D01%
	10 ms	02	%0207D02%
	20 ms	03	%0207D03%
	40 ms	04	%0207D04%
	80 ms	05	%0207D05%
Inter-byte delay %0208M%	1 ms	00*	%0208D00% *
	2 ms	01	%0208D01%
	4 ms	02	%0208D02%
	8 ms	03	%0208D03%
Caps Lock reversion	Disable	00*	%0209D00% *

Multiple-scan setting			Single-scan setting
Option barcode	Option	Alpha. entry	
%0209M%	Enable	01	%0209D01%
Caps Lock override %0210M%	Disable	00*	%0210D00% *
	Enable	01	%0210D01%

%END%

3-6 RS-232 interface

Flow control:

None-The communication only uses TxD and RxD signals without any hardware or software handshaking protocol.

RTS/CTS- If the platform wants to send the barcode data to host computer, it will issue the RTS signal first, wait for the CTS signal from the host computer, and then perform the normal data communication. If there is no replied CTS signal from the host computer after the timeout duration, the platform will issue an error indication. By setting (Host idle: Low RTS) or (Host idle: High RTS), the platform can be set to match the Serial Host RTS line.

XON/XOFF- An XOFF character turns the platform transmission off until the platform receives an XON character.

ACK/NAK- After transmitting data, the platform expects either an ACK (acknowledge) or NAK (not acknowledge) response from the host. When a NAK is received, the platform transmits the same data again and waits for either an ACK or NAK. After three unsuccessful attempts to send data when NAKs are received, the platform issues an error indication and discards the data.

Inter-character delay: This delay is inserted after each data character transmitted.

Response delay: This delay is used for serial communication of the platform when it waits for a handshaking acknowledgment from the host.

Multiple-scan setting			Single-scan setting
Option barcode	Option	Alpha. entry	
Flow control %0301M%	None	00*	%0301D00% *
	RTS/CTS (Host idle: Low RTS)	01	%0301D01%
	RTS/CTS (Host idle: High RTS)	02	%0301D02%
	XON/XOFF	03	%0301D03%
	ACK/NAK	04	%0301D04%
Inter-character delay %0302M%	0 ms	00*	%0302D00% *
	5 ms	01	%0302D01%
	10 ms	02	%0302D02%
	20 ms	03	%0302D03%
	40 ms	04	%0302D04%
	80 ms	05	%0302D05%

Multiple-scan setting			Single-scan setting
Option barcode	Option	Alpha. entry	
Response delay %0304M%	00-99 (100 ms)	00-99	
		00*	%0304D00% *
Baud rate %0305M%	300	00	%0305D00%
	600	01	%0305D01%
	1200	02	%0305D02%
	2400	03	%0305D03%
	4800	04	%0305D04%
	9600	05*	%0305D05% *
	19200	06	%0305D06%
	38400	07	%0305D07%
	57600	08	%0305D08%
	115200	09	%0305D09%
Parity bit %0306M%	None	00*	%0306D00% *
	Odd	01	%0306D01%
	Even	02	%0306D02%
Data bit %0307M%	8 bits	00*	%0307D00% *
	7 bits	01	%0307D01%
Stop bit %0308M%	1 bit	00*	%0308D00% *
	2 bits	01	%0308D01%

%END%

3-7 USB interface

USB device type:

HID keyboard– By setting, the platform is used as a USB HID keyboard emulation device.

USB virtual COM– By setting, the platform emulates a regular RS232-based COM port. If a Microsoft Windows PC is connected to the platform, a driver is required to install on the connected PC. The driver will use the next available COM Port number. The driver and the installation guide can be found in the associated CD and on the manufacturer's website. A Windows-based software COM_Text is recommended to display the barcode data in text format. COM_Text emulates some kind of serial-key typing.

Note: When changing USB Device Type, the platform automatically restarts.

Simple COM Port Emulation- Please contact the manufacturer for the instruction.

Keyboard layout: The platform supports different national keyboard layouts.

Inter-character delay: This delay is inserted after each data character transmitted. By selecting, the user can change the output speed of the platform to match the speed of the host USB communication port.

Numeric key:

Alphabetic key- the platform will output code result as alphabetic key.

Numeric key- the platform will output code result as pressing numeric keypad ('0', '1', '2', '3', '4', '5', '6', '7', '8', '9', '.', '+', '-', '/', '*' only).

Alt+ keypad- the platform will output code result as pressing Alt+ numeric key (on keypad). Note that the Num Lock control key must be ON. This setting can be specially adapted for use with different national keyboard layout.

Multiple-scan setting			Single-scan setting
Option barcode	Option	Alpha. entry	
USB device type %0901M%	HID keyboard	00*	%0901D00% *
	HID keyboard for Apple Mac	01	%0901D01%
	USB virtual COM	02	%0901D02%
	Simple COM Port Emulation	03	%0901D03%
Keyboard layout %0902M%	USA	00*	%0902D00% *
	Turkish F	01	%0902D01%
	Turkish Q	02	%0902D02%
	French	03	%0902D03%

Multiple-scan setting			Single-scan setting
Option barcode	Option	Alpha. entry	
	Italian	04	%0902D04%
	Spanish	05	%0902D05%
	Slovak	06	%0902D06%
	Denmark	07	%0902D07%
	Japanese	08	%0902D08%
	German	09	%0902D09%
	Belgian	10	%0902D10%
	Russian	11	%0902D11%
	Czech	12	%0902D12%
Character encoding system %0413M%	Refer to 3-8 Scan mode & some global settings.		
Inter-character delay %0903M%	0 ms	00	%0903D00%
	5 ms	01*	%0903D01% *
	10 ms	02	%0903D02%
	20 ms	03	%0903D03%
	40 ms	04	%0903D04%
	60 ms	05	%0903D05%
Numeric key %0904M%	Alphabetic key	00*	%0904D00% *
	Numeric keypad	01	%0904D01%
	Alt+ keypad	02	%0904D02%

%END%

3-8 Scan mode & some global settings

Scan mode:

Good-read off-The trigger button must be pressed once to activate scanning. The light source of platform stops scanning when there is a successful reading or no code is decoded after the Stand-by duration elapsed.

Momentary-The trigger button acts as a switch. Press button to activate scanning and release button to stop scanning. The light source of platform stops scanning when there is a successful reading or no code is decoded after the Stand-by duration elapsed.

Alternate continue-The trigger button acts as a toggle switch. Press button to activate or stop scanning.

Continue-The platform always keeps scanning, and it does not matter when the trigger button is pressed or duration is elapsed.

Timeout off-The trigger button must be pressed once to activate scanning. The light source of platform stops scanning when no code is successful decoded after the Stand-by duration elapsed.

Auto-detection- Good-read off – By setting Enable, the platform will start operating if any nearby object has been detected. The platform will stop scanning when there is a successful reading or no code is decoded after the Stand-by duration elapsed. Once the platform stops scanning, the present object must be removed to enable Auto-detection.

Auto-detection- Good-read on – By setting Enable, the platform will start operating if any nearby object has been detected. The platform stops scanning when no code is successful decoded after the Stand-by duration elapsed. Once the platform stops scanning, the present object must be removed to enable Auto-detection.

Auto-detection sensitivity: It is the sensitivity of platform to ambient brightness change. Sensitivity is expressed as a percentage value of ambient light change, in the range of 5% to 50%. The smaller the percentage value, the higher the sensitivity, the easier the platform will be triggered.

Same barcode delay time for 1D symbols: This feature is activated only when the Scan mode is in alternate or continuous mode. Once a 1D barcode has been scanned and output successfully, the optics module's lights must be off or moved away from the barcode beyond delay time to active a next scanning on the same barcode.

Same barcode delay time for 2D symbols: This feature is activated only when the Scan mode is in alternate or continuous mode. Once a 2D barcode has been scanned and output successfully, the optics module's lights must be off or moved away from the barcode beyond delay time to active a next scanning on the same barcode.

Double confirm: If it is enabled, the platform will require a several times of same-decoded-data to confirm a valid reading.

Global Max./Min. code length for 1D symbol: These two lengths are defined as the valid range of decoded 1D barcode data length. Make sure that the minimum length setting is no greater than the maximum length setting, or otherwise the labels of the symbol will not be readable. In particular, the same value can be set for both minimum and maximum reading length to force the fixed length barcode decoded.

Notes:

1. Please set the max./min. length for individual barcode in later sections, if special demand is requested.

2. The number of check digits is included in max./min. code length.

3. These two settings have no effect on the symbols with fixed-length, e.g. UPC-A, UPC-E, EAN-13, EAN-8 and China Post.

Global G1-G6 string selection: The platform offer one or two string group for ALL symbols. By setting one or two digits to indicate which string group you want to apply. You may refer to 3-40 G1-G6 & C1-C3 & FN1 substitution string setting and 3-41 G1-G4 string position & Code ID position.

Example: Group 1 → set 01 or 10. Group 2 and 4 → set 24 or 42.

All valid settings include 00, 01, 02, 03, 04, 05, 06, 10, 11, 12, 13, 14, 15, 16, 20, 21, 22, 23, 24, 25, 26, 30, 31, 32, 33, 34, 35, 36, 40, 41, 42, 43, 44, 45, 46, 50, 51, 52, 53, 54, 55, 56, 60, 61, 62, 63, 64, 65 and 66.

Element amendment: If it is enabled, the platform can read the barcode comprised with bars and spaces in different scale.

Character output restraint:

Printable character only- If this option is selected, the platform will output the printable characters only, i.e. in ASCII from 20H to 7EH.

Alphanumeric character only- If this option is selected, the platform will output the alphanumeric characters only, i.e. “A”-“Z”, “a”-“z”, “0”-“9”.

Decoder optimization: If it is enabled, the platform will optimize the decoder with error correction. This function is not effective for all types of barcodes.

Data output delay in continue-scan mode: If it is enabled, in the continue-scan mode, the platform can store the data while continue-scanning. The platform will output the data after the predefined delay elapsed. The maximum storage of data is 1000 characters. If this parameter is set to be “00”, the platform will not store data. And if the parameter is set to be “FF”, the platform will output data after stopping scanning.

Character encoding system: A character encoding system consists of a code that pairs each character from a given repertoire. Common examples include Morse code, the Baudot code, the ASCII and Unicode. If the data received does not display with the proper characters, it may be because the barcode being scanned was created using a character encoding system that is different from the one the host program is expecting. Try alternate options to find the proper one.

Complete data output before next decode attempt: This setting is active only when USB device type is set as “HID keyboard” or “HID keyboard for Apple Mac”, refer to 3-7 USB interface. If it is enabled, the platform will not start next decode attempt until previous data output is completed.

Multiple-scan setting			Single-scan setting
Option barcode	Option	Alpha. entry	
Scan mode %0401M%	Good-read off	00	%0401D00%
	Momentary	01*	%0401D01% *
	Alternate continue	02	%0401D02%
	Continue	03	%0401D03%
	Good-read on	04	%0401D04%
	Auto-detection- Good-read on	06	%0401D06%
	Auto-detection- Good-read off	07	%0401D07%
Auto-detection sensitivity %0604M%	5%	00*	%0604D00% *
	10%	01	%0604D01%
	15%	02	%0604D02%
	20%	03	%0604D03%
	25%	04	%0604D04%
	30%	05	%0604D05%
	35%	06	%0604D06%
	40%	07	%0604D07%
	45%	08	%0604D08%
	50%	09	%0604D09%
Standby duration %0402M%	4 seconds	00*	%0402D00% *
	8 seconds	01	%0402D01%
	16 seconds	02	%0402D02%
	24 seconds	03	%0402D03%
	30 seconds	04	%0402D04%

Multiple-scan setting			Single-scan setting
Option barcode	Option	Alpha. entry	
	1 minute	05	%0402D05%
	1.5 minutes	06	%0402D06%
	2 minutes	07	%0402D07%
	5 minutes	08	%0402D08%
	7 minutes	09	%0402D09%
	10 minutes	10	%0402D10%
	15 minutes	11	%0402D11%
	20 minutes	12	%0402D12%
	30 minutes	13	%0402D13%
	45 minutes	14	%0402D14%
	1 hour	15	%0402D15%
Same barcode delay time for 1D symbol %0403M%	00-FF_{16} (50 ms)	00-FF_{16}	
		00	%0403H00%
		08*	%0403H08% *
Same barcode delay time for 2D symbol %0415M%	00-FF_{16} (50 ms)	00-FF_{16}	
		00	%0415H00%
		08*	%0415H08% *
Double confirm %0404M%	00-09 (00: no)	00-09	
		00*	%0404D00% *
Global max. code length for 1D symbol %0405M%	04-99	04-99	
		99*	%0405D99% *
Global min. code length for	01-99	01-99	

Multiple-scan setting			Single-scan setting
Option barcode	Option	Alpha. entry	
1D symbol %0406M%		04*	%0406D04% *
Global G1-G6 string selection %0407M%	00-66	00-66	
		00*	%0407D00% *
Element amendment %0408M%	Disable	00	%0408D00%
	Enable	01*	%0408D01% *
Character output restraint %0409M%	None	00*	%0409D00% *
	Printable character only	01	%0409D01%
	Alphanumeric character only	02	%0409D02%
Decoder optimization %0410M%	Disable	00	%0410D00%
	Enable	01*	%0410D01% *
Data output delay in continue-scan mode %0411M%	00-99 (100 ms) FF (Never)	00-FF_{16}	
		00*	%0411H00% *
Character encoding system %0413M%	ASCII	00*	%0413D00% *
	UTF-8	01	%0413D01%
	Windows-1251	02	%0413D02%
Complete data output before next decode attempt %0414M%	Disable	00*	%0414D00% *
	Enable	01	%0414D01%

%END%

3-9 Indication

Power on alert: After power-on the platform will generate an alert signal to indicate a successful self-test.

Speaker indication: After each successful reading, the platform will beep to indicate a good barcode reading.

Multiple-scan setting			Single-scan setting
Option barcode	Option	Alpha. entry	
Power on alert %0501M%	Disable	00	%0501D00%
	Enable	01*	%0501D01% *
Speaker indication %0503M%	Disable	00	%0503D00%
	Enable	01*	%0503D01% *

%END%

3-10 Decode illumination

Decode illumination mode: Enable illumination causes the platform to turn on the illumination to aid decoding. Disable illumination to turn off illumination for the platform during decoding. Better quality images could be obtained with illumination support. The effectiveness of the illumination decreases as the distance to the target increases.

Level of decode illumination: This parameter can be adjusted for different level of decode illumination.

Illumination mode of Auto-detection:

Always off- Illumination LED will be always turned off.

Enable illumination in low light conditions- In low light conditions, the platform will turn on illumination LED automatically to ensure normal work. While in other light conditions, the illumination LED will be turned off automatically.

Always on- Illumination LED will be always turned on (Default).

Note: This function is only valid in Auto-detection mode.

Multiple-scan setting			Single-scan setting
Option barcode	Option	Alpha. Entry	
Decode illumination %9001M%	Always Off	00	%9001D00%
	Always On	01	%9001D01%
	Flashing	02	%9001D02%
	Always-On when reading	03*	%9001D03% *
Level of decode illumination %9003M%	Disable decode illumination	00	%9003D00%
	Low	01	%9003D01%
	Middle	02*	%9003D02% *
	High	03	%9003D03%
Illumination mode of Auto-detection %0605M%	Always off	00	%0605D00%
	Enable illumination in low light conditions	01	%0605D01%
	Always on	02*	%0605D02% *

%END%

3-11 Other settings

1D symbols read: A global setting of 1D symbols readability.

2D symbols read: A global setting of 2D symbols readability.

Vertical centering read: By setting Enable, the platform reads only the barcode centered by the aimer in vertical direction. However, the platform will read either one of two barcodes which are positioned horizontally.

Mobile screen read: By setting enable, the platform can read barcodes on a mobile screen better. However, this will slow the reading speed of normal barcodes a little bit, and the decode illumination will flash.

Multiple-scan setting			Single-scan setting
Option barcode	Option	Alpha. entry	
1D symbols read %1005M%	Follow respective 1D symbol setting	00*	%1005D00% *
	All 1D OFF	01	%1005D01%
2D symbols read %1001M%	Follow respective 2D symbol setting	00*	%1001D00% *
	All 2D OFF	01	%1001D01%
	All 2D ON	02	%1001D02%
	Only PDF417 ON	03	%1001D03%
	Only QR code ON	04	%1001D04%
	Only Data Matrix ON	05	%1001D05%
	Only MaxiCode ON	06	%1001D06%
	Only Aztec Code ON	07	%1001D07%
	Only Han Xin Code ON	08	%1001D08%
Vertical centering read %1004M%	Disable	00*	%1004D00% *
	Enable	01	%1004D01%
Mobile screen read %1007M%	Disable	00	%1007D00%
	Enable	01*	%1007D01% *

%END%

3-12 UPC-A

Read:

Format

System character	Data digits (10 digits)	Check digit

Check digit verification: The check digit is optional.

Check digit trans.: By setting Enable, check digit will be transmitted.

Code ID setting: Code ID is a one-or-two-character string used to represent the symbol upon a succeeding reading. If you want application to transmit Code ID, you must set Code ID transmission to be enabled. Refer to 3-42 String transmission.

Insertion group selection: Refer to Global insertion group selection of 3-8 Scan mode & some global settings.

Supplement digits: The Supplement digits barcode is the supplemental 2 or 5 characters.

Format

System character	Data digits (10 digits)	Check digit	Supplement digits 2 or 5

Truncation/Expansion:

Truncate leading zeros- The leading “0” digits of UPC-A data characters can be truncated when the feature is enabled.

Expand to EAN-13- It extends to 13-digits with a “0” leading digit when the feature is enabled.

Truncate system character- The system character of UPC-A data can be truncated when the feature is enabled.

Add country code- The country code (“0” for USA) can be added when the feature is enabled.

Multiple-scan setting			Single-scan setting
Option barcode	Option	Alpha. entry	
Read %1101M%	Disable	00	%1101D00%
	Enable	01*	%1101D01% *
Check digit verification %1102M%	Disable	00	%1102D00%
	Enable	01*	%1102D01% *
Check digit trans. %1103M%	Disable	00	%1103D00%
	Enable	01*	%1103D01% *
Code ID setting %1104M%	00-FF_{16} (ASCII)	00-FF_{16}	
		<A>*	%1104H41% *
Insert group selection %1105M%	00-66	00-66	
		00*	%1105D00%
Supplement digits %1106M%	None	00*	%1106D00% *
	2 digits	01	%1106D01%
	5 digits	02	%1106D02%
	2 or 5 digits	03	%1106D03%
Truncation/Expansion %1107M%	None	00*	%1107D00% *
	Truncate leading zeros	01	%1107D01%
	Expand to EAN-13	02	%1107D02%
	Truncate system character	03	%1107D03%
	Add country code	04	%1107D04%

%END%

3-13 UPC-E

Read:

Format

System character “0”	Data digits (6 digits)	Check digits

Check digit verification: The check digit is optional and made as the sum of the numerical value of the data digits.

Check digit trans.: By setting Enable, check digit will be transmitted.

Code ID setting: Refer to Code ID setting of 3-12 UPC-A.

Insertion group selection: Refer to Insertion group selection of 3-12 UPC-A.

Supplement digits:

Format

System character “0”	Data digits (6 digits)	Check digit	Supplement digits 2 or 5

Truncation/Expansion:

Truncate leading zeros- Refer to Truncation/Expansion of 3-12 UPC-A.

Expand to EAN-13- It extends to 13-digits with “0” digits when the feature is set to be enabled.

Example: Barcode “0123654”,

Output: “0012360000057”.

Expand to UPC-A- It extends to 12-digits when the feature is set to be enabled.

Truncate system character- The system character “0” of UPC-E data can be truncated when the feature is enabled.

Multiple-scan setting			Single-scan setting
Option barcode	Option	Alpha. entry	
Read %1201M%	Disable	00	%1201D00%
	Enable	01*	%1201D01% *
Check digit verification %1202M%	Disable	00	%1202D00%
	Enable	01*	%1202D01% *
Check digit trans. %1203M%	Disable	00	%1203D00%
	Enable	01*	%1203D01% *
Code ID setting %1204M%	00-FF_{16} (ASCII)	00-FF_{16}	
		<D>*	%1204H44% *
Insert group selection %1205M%	00-66	00-66	
		00*	%1205D00% *
Supplement digits %1206M%	None	00*	%1206D00% *
	2 digits	01	%1206D01%
	5 digits	02	%1206D02%
	2 or 5 digits	03	%1206D03%
Truncation/Expansion %1207M%	None	00*	%1207D00% *
	Truncate leading zeros	01	%1207D01%
	Expand to EAN-13	02	%1207D02%
	Expand to UPC-A	03	%1207D03%
	Truncate system character	04	%1207D04%

%END%

3-14 UPC-E1

Read:

Format

System character “1”	Following 5 data digits	Check digits

Check digit verification: The check digit is optional and made as the sum of the numerical value of the data digits.

Check digit trans.: By setting Enable, check digit will be transmitted.

Code ID setting: Refer to Code ID setting of 3-12 UPC-A.

Insertion group selection: Refer to Insertion group selection of 3-12 UPC-A.

Supplement digits:

Format

System character “1”	Data digits (6 digits)	Check digit	Supplement digits 2 or 5

Truncation/Expansion:

Expand to EAN-13- It extends to 13-digits with “0” digits when the feature is set to be enabled.

Expand to UPC-A- It extends to 12-digits when the feature is set to be enabled.

Truncate system character- The system character “1” of UPC-E1 data can be truncated when the feature is enabled.

Multiple-scan setting			Single-scan setting
Option barcode	Option	Alpha. entry	
Read %3401M%	Disable	00*	%3401D00% *
	Enable	01	%3401D01%
Check digit verification %3402M%	Disable	00	%3402D00%
	Enable	01*	%3402D01% *
Check digit trans. %3403M%	Disable	00	%3403D00%
	Enable	01*	%3403D01% *
Code ID setting %3404M%	00-FF_{16} (ASCII)	00-FF_{16}	
		<D>*	%3404H44% *
Insert group selection %3405M%	00-66	00-66	
		00*	%3405D00% *
Supplement digits %3406M%	None	00*	%3406D00% *
	2 digits	01	%3406D01%
	5 digits	02	%3406D02%
	2 or 5 digits	03	%3406D03%
Truncation/Expansion %3407M%	None	00*	%3407D00% *
	Expand to EAN-13	02	%3407D02%
	Expand to UPC-A	03	%3407D03%
	Truncate system character	04	%3407D04%

%END%

3-15 EAN-13 (ISBN/ISSN)

Read:

Format

Data digits (12 digits)	Check digit

Check digit verification: The check digit is optional and made as the sum of the numerical value of the data digits.

Check digit transmission: By setting Enable, check digit will be transmitted.

EAN-13 code ID setting: Refer to Code ID setting of 3-12 UPC-A.

Insertion group selection: Refer to Insertion group selection of 3-12 UPC-A.

Supplement digits:

Format

Data digits (12 digits)	Check digit	Supplement digits 2 or 5

ISBN/ISSN conversion: The ISBN (International Standard Book Number, or Bookland EAN) and ISSN (International Standard Serial Number) are two kinds of barcode for books and magazines. The ISBN is 10 digits with leading “978” and the ISSN is 8 digits with leading “977” of the EAN-13 symbol.

Example:

Barcode “9780194315104”, Output: “019431510X”.

Barcode “9771005180004”, Output: “10051805”.

ISBN/ISSN code ID setting: Refer to Code ID setting of 3-12 UPC-A.

Multiple-scan setting			Single-scan setting
Option barcode	Option	Alpha. entry	
Read %1301M%	Disable	00	%1301D00%
	Enable	01*	%1301D01% *
Check digit verification %1302M%	Disable	00	%1302D00%
	Enable	01*	%1302D01% *
Check digit transmission %1303M%	Disable	00	%1303D00%
	Enable	01*	%1303D01% *
EAN-13 code ID setting %1304M%	00-FF$_{16}$ (ASCII)	00-FF$_{16}$	
		<A>*	%1304H41% *
Insert group selection %1305M%	00-66	00-66	
		00*	%1305D00% *
Supplement digits %1306M%	None	00*	%1306D00% *
	2 digits	01	%1306D01%
	5 digits	02	%1306D02%
	2 or 5 digits	03	%1306D03%
ISBN/ISSN conversion %1307M%	Disable	00*	%1307D00% *
	Enable	01	%1307D01%
ISBN/ISSN code ID setting %1309M%	00-FF$_{16}$ (ASCII)	00-FF$_{16}$	
		<B>*	%1309H42% *

%END%

3-16 EAN-8

Read:

Format

Data digits (7 digits)	Check digit

Check digit verification: The check digit is optional and made as the sum of the numerical value of the data digits.

Check digit trans.: By setting Enable, check digit will be transmitted.

Code ID setting: Refer to Code ID setting of 3-12 UPC-A.

Insertion group selection: Refer to Insertion group selection of 3-12 UPC-A.

Supplement digits:

Format

Data digits (7 digits)	Check digit	Supplement Digits 2 or 5

Truncation/Expansion: Refer to Truncation/Expansion of 3-12 UPC-A.

Multiple-scan setting			Single-scan setting
Option barcode	Option	Alpha. entry	
Read %1401M%	Disable	00	%1401D00%
	Enable	01*	%1401D01% *
Check digit verification %1402M%	Disable	00	%1402D00%
	Enable	01*	%1402D01% *
Check digit trans. %1403M%	Disable	00	%1403D00%
	Enable	01*	%1403D01% *
Code ID setting %1404M%	$00\text{-}FF_{16}$ (ASCII)	$00\text{-}FF_{16}$	
		<C>*	%1404H42% *
Insert group selection %1405M%	00-66	00-66	
		00*	%1405D00% *
Supplement digits %1406M%	None	00*	%1406D00% *
	2 digits	01	%1406D01%
	5 digits	02	%1406D02%
	2 or 5 digits	03	%1406D03%
Truncation/Expansion %1407M%	None	00*	%1407D00% *
	Truncate leading zero	01	%1407D01%
	Expand to EAN-13	02	%1407D02%

%END%

3-17 Code 39 (Code 32, Trioptic Code 39)

Read:

Format

*	Data digits (variable)	Check digit (optional)	*

Check digit verification: The check digit is optional and made as the sum module 43 of the numerical value of the data digits.

Check digit transmission: By setting Enable, check digit will be transmitted.

Max./Min. code length: Each symbol has own max./min. code length. If both setting of max./min. code length are "00"s, the setting of global max./min. code length is effective. The length is defined as to the actual barcode data length to be sent. Label with length exceeds these limits will be rejected. Make sure that the minimum length setting is no greater than the maximum length setting, or otherwise all the labels of the symbol will not be readable. In particular, you can see the same value for both minimum and maximum reading length to force the fixed length barcode decoded.

Code ID setting: Refer to Code ID setting of 3-12 UPC-A.

Insertion group selection: Refer to Insertion group selection of 3-12 UPC-A.

Start/End transmission: The start and end characters of Code 39 are "*"s. You can transmit all data digits including two "*"s.

"*" as data character: By setting Enable, "*" can be recognized as data character.

Convert Code 39 to Code 32: Code 32 is a variant of Code 39 used by the Italian pharmaceutical industry. Note that Code 39 must be enabled in order for this parameter to function.

Format of Code 32

"A" (optional)	Data digits (8 digits)	Check digit

Code 32 Prefix "A" transmission: By setting Enable, the prefix character "A" can be added to all Code 32 barcodes.

Trioptic Code 39 read: Trioptic Code 39 is a variant of Code 39 used in the marking of magnetic tapes and computer cartridges. Trioptic Code 39 symbols always contain six characters.

Format

$	Data digits (6 digits)	$

Trioptic Code 39 Start/End transmission: The start and end characters of Trioptic Code 39 are "$"s. You can transmit all data digits including two "$"s.

Multiple-scan setting			Single-scan setting
Option barcode	Option	Alpha. entry	
Read %1501M%	Disable	00	%1501D00%
	Enable	01*	%1501D01% *
Check digit verification %1502M%	Disable	00*	%1502D00% *
	Enable	01	%1502D01%
Check digit transmission %1503M%	Disable	00*	%1503D00% *
	Enable	01	%1503D01%
Max. code length %1504M%	00-99	00-99	
		00*	%1504D00% *
Min. code length %1505M%	00-99	00-99	
		01*	%1505D01% *
Code ID setting %1506M%	00-FF_{16} (ASCII)	00-FF_{16}	
		<M>*	%1506H4D% *
Insert group selection %1507M%	00-66	00-66	
		00*	%1507D00% *
Format %1508M%	Standard	00*	%1508D00% *
	Full ASCII	01	%1508D01%
Start/End transmission %1509M%	Disable	00*	%1509D00% *
	Enable	01	%1509D01%
"*" as data character %1510M%	Disable	00*	%1510D00% *
	Enable	01	%1510D01%
Convert Code 39 to Code 32 %1511M%	Disable	00*	%1511D00% *
	Enable	01	%1511D01%

Multiple-scan setting			Single-scan setting
Option barcode	Option	Alpha. entry	
Code 32 Prefix “A” transmission %1512M%	Disable	00*	%1512D00% *
	Enable	01	%1512D01%
Trioptic Code 39 read %1513M%	Disable	00*	%1513D00% *
	Enable	01	%1513D01%
Trioptic Code 39 Start/End transmission %1514M%	Disable	00*	%1514D00% *
	Enable	01	%1514D01%
%END%			

3-18 Interleaved 2 of 5

Read:

Format

Data digits (Variable)	Check digit (optional)

Check digit verification: The check digit is made as the sum module 10 of the numerical values of all data digits. There are two optional check digit algorithms: the specified Uniform Symbol Specification (USS) and the Optical Product Code Council (OPCC).

Check digit transmission: By setting Enable, check digit will be transmitted.

Max./Min. code length: Refer to Max./Min. code length of 3-17 Code 39.

Code ID setting: Refer to Code ID setting of 3-12 UPC-A.

Insertion group selection: Refer to Insertion group selection of 3-12 UPC-A.

Multiple-scan setting			Single-scan setting
Option barcode	Option	Alpha. entry	
Read %1601M%	Disable	00	%1601D00%
	Enable	01*	%1601D01% *
Check digit verification %1602M%	Disable	00*	%1602D00% *
	USS	01	%1602D01%
	OPCC	02	%1602D02%
Check digit transmission %1603M%	Disable	00*	%1603D00% *
	Enable	01	%1603D01%
Max. code length %1604M%	00-99	00-99	
		00*	%1604D00% *
Min. code length %1605M%	00-99	00-99	
		06*	%1605D06% *
Code ID setting %1606M%	00-FF_{16} (ASCII)	00-FF_{16}	
		<I>*	%1606H49% *
Insert group selection %1607M%	00-66	00-66	
		00*	%1607D00% *

%END%

3-19 Industrial 2 of 5

Read:

Format

Data digits (variable)

Max./Min. code length: Refer to Max./Min. code length of 3-17 Code 39.

Code ID setting: Refer to Code ID setting of 3-12 UPC-A.

Insertion group selection: Refer to Insertion group selection of 3-12 UPC-A.

Multiple-scan setting			Single-scan setting
Option barcode	Option	Alpha. entry	
Read %1701M%	Disable	00*	%1701D00% *
	Enable	01	%1701D01%
Max. code length %1702M%	00-99	00-99	
		00*	%1702D00% *
Min. code length %1703M%	00-99	00-99	
		00*	%1703D00% *
Code ID setting %1704M%	00-FF$_{16}$ (ASCII)	00-FF$_{16}$	
		<H>*	%1704H48% *
Insert group selection %1705M%	00-66	00-66	
		00*	%1705D00% *

%END%

3-20 Matrix 2 of 5

Read:

Format

Data digits (variable)	Check digit (optional)

Check digit verification: The check digit is made as the sum module 10 of the numerical values of all data digits.

Check digit transmission: By setting Enable, check digit will be transmitted.

Max./Min. code length: Refer to Max./Min. code length of 3-17 Code 39.

Code ID setting: Refer to Code ID setting of 3-12 UPC-A.

Insertion group selection: Refer to Insertion group selection of 3-12 UPC-A.

Multiple-scan setting			Single-scan setting
Option barcode	Option	Alpha. entry	
Read %1801M%	Disable	00	%1801D00%
	Enable	01*	%1801D01% *
Check digit verification %1802M%	Disable	00*	%1802D00% *
	Enable	01	%1802D01%
Check digit transmission %1803M%	Disable	00*	%1803D00% *
	Enable	01	%1803D01%
Max. code length %1804M%	00-99	00-99	
		00*	%1804D00% *
Min. code length %1805M%	00-99	00-99	
		06*	%1805D06% *
Code ID setting %1806M%	00-FF$_{16}$ (ASCII)	00-FF$_{16}$	
		<X>*	%1806H58% *
Insert group selection %1807M%	00-66	00-66	
		00*	%1807D00% *

%END%

3-21 Codabar

Read:

Format

Start character	Data digits (variable)	Check digit (optional)	End character

Check digit verification: The check digit is made as the sum module 16 of the numerical values of all data digits.

Check digit transmission: By setting Enable, check digit will be transmitted.

Max./Min. code length: Refer to Max./Min. code length of 3-17 Code 39.

Code ID setting: Refer to Code ID setting of 3-12 UPC-A.

Insertion group selection: Refer to Insertion group selection of 3-12 UPC-A.

Start/End type: Codabar has four pairs of Start/End pattern; you may select one pair to match your application.

Start/End transmission: Refer to Start/End transmission of Code 39.

Start/End character equality: By setting Enable, the start and end character of a Codabar barcode must be the same.

Multiple-scan setting			Single-scan setting
Option barcode	Option	Alpha. entry	
Read %1901M%	Disable	00	%1901D00%
	Enable	01*	%1901D01% *
Check digit verification %1902M%	Disable	00*	%1902D00% *
	Enable	01	%1902D01%
Check digit transmission %1903M%	Disable	00*	%1903D00% *
	Enable	01	%1903D01%
Max. code length %1904M%	00-99	00-99	
		00*	%1904D00% *
Min. code length	00-99	00-99	

Multiple-scan setting			Single-scan setting
Option barcode	Option	Alpha. entry	
%1905M%		00*	%1905D00% *
Code ID setting %1906M%	00-FF$_{16}$ (ASCII)	00-FF$_{16}$	
		<N>*	%1906H4E% *
Insert group selection %1907M%	00-66	00-66	
		00*	%1907D00% *
Start/End character type %1908M%	ABCD/ABCD	00*	%1908D00% *
	abcd/abcd	01	%1908D01%
	ABCD/TN*E	02	%1908D02%
	abcd/tn*e	03	%1908D03%
Start/End character transmission %1909M%	Disable	00*	%1909D00% *
	Enable	01	%1909D01%
Start/End character equality %1910M%	Disable	00*	%1910D00% *
	Enable	01	%1910D01%

%END%

3-22 Code 128

Read:

Format

Data digits (variable)	Check digit (optional)

Check digit verification: The check digit is made as the sum module 103 of all data digits.

Check digit transmission: By setting Enable, check digit will be transmitted.

Max./Min. code length: Refer to Max./Min. code length of 3-17 Code 39.

Code ID setting: Refer to Code ID setting of 3-12 UPC-A.

Insertion group selection: Refer to Insertion group selection of 3-12 UPC-A.

Truncate leading zeros: The leading “0” digits of Code 128 barcode characters can be truncated when the feature is enabled.

Multiple-scan setting			Single-scan setting
Option barcode	Option	Alpha. entry	
Read %2001M%	Disable	00	%2001D00%
	Enable	01*	%2001D01% *
Check digit verification %2002M%	Disable	00	%2002D00%
	Enable	01*	%2002D01% *
Check digit transmission %2003M%	Disable	00*	%2003D00% *
	Reserved	01	%2003D01%
Max. code length %2004M%	00-99	00-99	
		00*	%2004D00% *
Min. code length %2005M%	00-99	00-99	
		01*	%2005D01% *
Code ID setting %2006M%	00-FF_{16} (ASCII)	00-FF_{16}	
		<K>*	%2006H4B% *
Insert group selection %2007M%	00-66	00-66	
		00*	%2007D00% *
Truncate leading zeros %2008M%	Disable	00*	%2008D00% *
	All leading “0”s	01	%2008D01%
	Only the first “0”	02	%2008D02%

%END%

3-23 UCC/EAN 128

Read:

Format

Data digits (variable)	Check digit (optional)

Check digit verification: The check digit is made as the sum module 103 of all data digits.

Check digit transmission: By setting Enable, check digit will be transmitted.

Max. /Min. code length: Refer to Max./Min. code length of 3-17 Code 39.

Code ID setting: Refer to Code ID setting of 3-12 UPC-A.

Insertion group selection: Refer to Insertion group selection of 3-12 UPC-A.

Truncate leading zeros: Refer to Truncate leading zeros of 3-22 Code 128.

Multiple-scan setting			Single-scan setting
Option barcode	Option	Alpha. entry	
Read %2501M%	Disable	00	%2501D00%
	Enable	01*	%2501D01% *
Check digit verification %2502M%	Disable	00	%2502D00%
	Enable	01*	%2502D01% *
Check digit transmission %2503M%	Disable	00*	%2503D00% *
	Reserved	01	%2503D01%
Max. code length %2504M%	00-99	00-99	
		00*	%2504D00% *
Min. code length %2505M%	00-99	00-99	
		01*	%2505D01% *
Code ID setting %2506M%	$00\text{-}FF_{16}$ (ASCII)	$00\text{-}FF_{16}$	
		<K>*	%2506H4B% *
Insert group selection %2507M%	00-66	00-66	
		00*	%2507D00% *
Truncate leading zeros %2508M%	Disable	00*	%2508D00% *
	All leading “0”s	01	%2508D01%
	Only the first “0”	02	%2508D02%

%END%

3-24 ISBT 128

Read:

Format

“=” or “&”	Data digits (variable)	Check digit (optional)

Check digit verification: The check digit is made as the sum module 103 of all data digits.

Check digit transmission: By setting Enable, check digit will be transmitted.

Max./Min. code length: Refer to Max./Min. code length of 3-17 Code 39.

Code ID setting: Refer to Code ID setting of 3-12 UPC-A.

Insertion group selection: Refer to Insertion group selection of 3-12 UPC-A.

Multiple-scan setting			Single-scan setting
Option barcode	Option	Alpha. entry	
Read %3301M%	Disable	00	%3301D00%
	Enable	01*	%3301D01% *
Check digit verification %3302M%	Disable	00	%3302D00%
	Enable	01*	%3302D01% *
Check digit transmission %3303M%	Disable	00*	%3303D00% *
	Reserved	01	%3303D01%
Max. code length %3304M%	00-99	00-99	
		00*	%3304D00% *
Min. code length %3305M%	00-99	00-99	
		01*	%3305D01% *
Code ID setting %3306M%	00-FF$_{16}$ (ASCII)	00-FF$_{16}$	
		<K>*	%3306H4B% *
Insert group selection %3307M%	00-66	00-66	
		00*	%3307D00% *

%END%

3-25 Code 93

Read:

Format

Data digits (variable)	2 check digits (optional)

Check digit verification: The check digit is made as the sum module 47 of the numerical values of all data digits.

Check digit transmission: By setting Enable, check digit will be transmitted.

Max./Min. code length: Refer to Max./Min. code length of 3-17 Code 39.

Code ID setting: Refer to Code ID setting of 3-12 UPC-A.

Insertion group selection: Refer to Insertion group selection of 3-12 UPC-A.

Multiple-scan setting			Single-scan setting
Option barcode	Option	Alpha. entry	
Read %2101M%	Disable	00	%2101D00%
	Enable	01*	%2101D01% *
Check digit verification %2102M%	Disable	00	%2102D00%
	Enable	01*	%2102D01% *
Check digit transmission %2103M%	Disable	00*	%2103D00% *
	Enable	01	%2103D01%
Max. code length %2104M%	00-99	00-99	
		00*	%2104D00% *
Min. code length %2105M%	00-99	00-99	
		01*	%2105D01% *
Code ID setting %2106M%	00-FF$_{16}$ (ASCII)	00-FF$_{16}$	
		<L>*	%2106H4C% *
Insert group selection %2107M%	00-66	00-66	
		00*	%2107D00% *

%END%

3-26 Code 11

Read:

Format

Data digits (variable)	Check digit 1 (optional)	Check digit 2 (optional)

Check digit verification: The check digit is presented as the sum module 11 of all data digits.

Check digit transmission: By setting Enable, check digit 1 and check digit 2 will be transmitted upon your selected check digit verification method.

Max./Min. code length: Refer to Max./Min. code length of 3-17 Code 39.

Code ID setting: Refer to Code ID setting of 3-12 UPC-A.

Insertion group selection: Refer to Insertion group selection of 3-12 UPC-A.

Multiple-scan setting			Single-scan setting
Option barcode	Option	Alpha. entry	
Read %2201M%	Disable	00*	%2201D00% *
	Enable	01	%2201D01%
Check digit verification %2202M%	Disable	00	%2202D00%
	One digit	01*	%2202D01% *
	Reserved	02	%2202D02%
	Reserved	03	%2202D03%
Check digit transmission %2203M%	Disable	00*	%2203D00% *
	Enable	01	%2203D01%
Max. code length %2204M%	00-99	00-99	
		00*	%2204D00% *
Min. code length %2205M%	00-99	00-99	
		00*	%2205D00% *
Code ID setting %2206M%	00-FF_{16} (ASCII)	00-FF_{16}	
		<V>*	%2206H56% *
Insert group selection %2207M%	00-66	00-66	
		00*	%2207D00% *

%END%

3-27 MSI/Plessey

Read:

Format

Data digits (variable)	Check digit 1 (optional)	Check digit 2 (optional)

Check digit verification: The MSI/Plessey has one or two optional check digits. There are three methods of verifying check digits, i.e. Mod10, Mod10/10 and Mod 11/10. The check digit 1 and check digit 2 will be calculated as the sum module 10 or 11 of the data digits.

Check digit transmission: By setting Enable, check digit 1 and check digit 2 will be transmitted upon your selected check digit verification method.

Max./Min. code length: Refer to Max./Min. code length of 3-17 Code 39.

Code ID setting: Refer to Code ID setting of 3-12 UPC-A.

Insertion group selection: Refer to Insertion group selection of 3-12 UPC-A.

Multiple-scan setting			Single-scan setting
Option barcode	Option	Alpha. entry	
Read %2301M%	Disable	00*	%2301D00% *
	Enable	01	%2301D01%
Check digit verification %2302M%	Disable	00*	%2302D00% *
	1 digit (mod 10)	01	%2302D01%
	Reserved	02	%2302D02%
	Reserved	03	%2302D03%
Check digit transmission %2303M%	Disable	00*	%2303D00% *
	Enable	01	%2303D01%
Max. code length %2304M%	00-99	00-99	
		00*	%2304D00% *
Min. code length %2305M%	00-99	00-99	
		00*	%2305D00% *
Code ID setting %2306M%	00-FF_{16} (ASCII)	00-FF_{16}	
		<O>*	%2306H4F% *
Insert group selection %2307M%	00-66	00-66	
		00*	%2307D00% *

%END%

3-28 UK/Plessey

Read:

Format

Data digits (variable)	2 check digits (optional)

Check digit verification: The UK/Plessey has one or two optional check digits. The check digit 1 and check digit 2 will be calculated as the sum module 10 or 11 of the data digits.

Check digit transmission: By setting Enable, check digit will be transmitted.

Max./Min. code length: Refer to Max./Min. code length of 3-17 Code 39.

Code ID setting: Refer to Code ID setting of 3-12 UPC-A.

Insertion group selection: Refer to Insertion group selection of 3-12 UPC-A.

Multiple-scan setting			Single-scan setting
Option barcode	Option	Alpha. entry	
Read %2401M%	Disable	00*	%2401D00% *
	Enable	01	%2401D01%
Check digit verification %2402M%	Disable	00	%2402D00%
	Enable	01*	%2402D01% *
Check digit transmission %2403M%	Disable	00*	%2403D00% *
	Enable	01	%2403D01%
Max. code length %2404M%	00-99	00-99	
		00*	%2404D00% *
Min. code length %2405M%	00-99	00-99	
		01*	%2405D01% *
Code ID setting %2406M%	00-FF$_{16}$ (ASCII)	00-FF$_{16}$	
		<U>*	%2406H55% *
Insert group selection %2407M%	00-66	00-66	
		00*	%2407D00% *

%END%

3-29 China Post

Read:

Format

11 Data digits

Max. /Min. code length: Refer to Max./Min. code length of 3-17 Code 39. The code length of China Post is 11.

Code ID setting: Refer to Code ID setting of 3-12 UPC-A.

Insertion group selection: Refer to Insertion group selection of 3-12 UPC-A.

Multiple-scan setting			Single-scan setting
Option barcode	Option	Alpha. entry	
Read %2601M%	Disable	00	%2601D00%
	Enable	01*	%2601D01% *
Max. code length %2604M%	00-99	00-99	
		11*	%2604D11% *
Min. code length %2605M%	00-99	00-99	
		11*	%2605D11% *
Code ID setting %2606M%	00-FF$_{16}$ (ASCII)	00-FF$_{16}$	
		<T>*	%2606H54% *
Insert group selection %2607M%	00-66	00-66	
		00*	%2607D00% *

%END%

3-30 GS1 DataBar (GS1 DataBar Truncated)

GS1 DataBar Truncated is structured and encoded the same as the standard GS1 DataBar format, except its height is reduced to a 13 modules minimum; while GS1 DataBar should have a height greater than or equal to 33 modules.

Read:

Format

16 Data digits

Code ID setting: Refer to Code ID setting of 3-12 UPC-A.

Insertion group selection: Refer to Insertion group selection of 3-12 UPC-A.

Conversion:

UCC/EAN 128- Refer to Code ID transmission of 3-42 String transmission,]Cm will be identified as AIM ID.

UPC-A or EAN-13- Barcode beginning with a single zero as the first digit has the leading “010” stripped and the barcode reported as EAN-13. Barcode beginning with two or more zeros but not six zeros has the leading “0100” stripped and the barcode reported as UPC-A.

Multiple-scan setting			Single-scan setting
Option barcode	Option	Alpha. entry	
Read %2701M%	Disable	00	%2701D00%
	Enable	01*	%2701D01% *
Code ID setting %2702M%	00-FF$_{16}$ (ASCII)	00-FF$_{16}$	
		<R>*	%2702H52% *
Insert group selection %2703M%	00-66	00-66	
		00*	%2703D00% *
Conversion %2704M%	None	00*	%2704D00% *
	UCC/EAN 128	01	%2704D01%
	UPC-A or EAN-13	02	%2704D02%

%END%

3-31 GS1 DataBar Limited

Read:

Format

16 Data digits

Code ID setting: Refer to Code ID setting of 3-12 UPC-A.

Insertion group selection: Refer to Insertion group selection of 3-12 UPC-A.

Conversion: Refer to Conversion of 3-29 GS1 DataBar (GS1 DataBar Truncated).

Multiple-scan setting			Single-scan setting
Option barcode	Option	Alpha. entry	
Read %2801M%	Disable	00	%2801D00%
	Enable	01*	%2801D01% *
Code ID setting %2802M%	00-FF$_{16}$ (ASCII)	00-FF$_{16}$	
		<R>*	%2802H52% *
Insert group selection %2803M%	00-66	00-66	
		00*	%2803D00% *
Conversion %2804M%	None	00*	%2804D00% *
	UCC/EAN 128	01	%2804D01%
	UPC-A or EAN-13	02	%2804D02%

%END%

3-32 GS1 DataBar Expanded

Read:

Format

Data characters (variable)

Code ID setting: Refer to Code ID setting of 3-12 UPC-A.

Insertion group selection: Refer to Insertion group selection of 3-12 UPC-A.

Conversion:

UCC/EAN 128- Refer to Code ID transmission of 3-42 String transmission,]Cm will be identified as AIM ID.

Multiple-scan setting			Single-scan setting
Option barcode	Option	Alpha. entry	
Read %2901M%	Disable	00	%2901D00%
	Enable	01*	%2901D01% *
Max. code length %2902M%	00-99	00-99	
		00*	%2902D00% *
Min. code length %2903M%	00-99	00-99	
		01*	%2903D01% *
Code ID setting %2904M%	00-FF$_{16}$ (ASCII)	00-FF$_{16}$	
		<R>*	%2904H52% *
Insert group selection %2905M%	00-66	00-66	
		00*	%2905D00% *
Conversion %2906M%	None	00*	%2906D00% *
	UCC/EAN 128	01	%2906D01%

%END%

3-33 China Finance

Note: This type of barcode is not Omni-directionally decodable. The encodable character set includes numeric 0 to 9. Among the symbol of 0 to 9, 0 and 2, 4 and 9, 5 and 8, 6 and 7, have the symmetrical pattern; the pattern of 1 and 3 is symmetrical.

Read:

Format

10 Data digits

Max./Min. code length: Refer to Max./Min. code length of 3-17 Code 39.

Check digit verification: The check digit is made as the sum module 10 of the numerical values of all data digits.

Leading character 5/6/7/8/9 converted to A/B/C/D/E: By setting, leading character 5/6/7/8/9 can be converted to A/B/C/D/E.

Leading character assignment: By setting, only the barcode with the assigned leading character can be output.

Code ID setting: Refer to Code ID setting of 3-12 UPC-A.

Insertion group selection: Refer to Insertion group selection of 3-12 UPC-A.

Multiple-scan setting			Single-scan setting
Option barcode	Option	Alpha. entry	
Read %3201M%	Disable	00*	%3201D00% *
	Enable	01	%3201D01%
Max. code length %3202M%	00-99	00-99	
		10*	%3202D10% *
Min. code length %3203M%	00-99	00-99	
		10*	%3203D10% *
Check digit verification %3204M%	Disable	00*	%3204D00% *
	Reserved	01	%3204D01%
Leading character 5/6/7/8/9 converted to A/B/C/D/E %3205M%	Disable	00	%3205D00%
	Enable	01*	%3205D01% *
	Only 5 converted to A	02	%3205D02%
	Only 6 converted to B	03	%3205D03%
	Only 7 converted to C	04	%3205D04%
	Only 8 converted to D	05	%3205D05%
	Only 9 converted to E	06	%3205D06%
Leading character assignment %3206M%	Disable	00	%3206D00%
	Assigned to 0	01*	%3206D01% *
	Assigned to 5 (A)	02	%3206D02%
	Assigned to 6 (B)	03	%3206D03%
	Assigned to 7 (C)	04	%3206D04%
	Assigned to 8 (D)	05	%3206D05%
	Assigned to 9 (E)	06	%3206D06%

Multiple-scan setting			Single-scan setting
Option barcode	Option	Alpha. entry	
	Assigned to 1	07	%3206D07%
	Assigned to 2	08	%3206D08%
	Assigned to 3	09	%3206D09%
	Assigned to 4	10	%3206D10%
Code ID setting %3207M%	00-FF_{16} (ASCII)	00-FF_{16}	
		<Y>*	%3207H59% *
Insert group selection %3208M%	00-66	00-66	
		00*	%3208D00% *

%END%

3-34 PDF417

Read:

Format

Data characters (variable)

Multiple-scan setting			Single-scan setting
Option barcode	Option	Alpha. entry	
Read %3001M%	Disable	00	%3001D00%
	Enable	01*	%3001D01% *

%END%

3-35 MicroPDF417

Read:

Format

Data characters (variable)

Multiple-scan setting			Single-scan setting
Option barcode	Option	Alpha. entry	
Read %3101M%	Disable	00*	%3101D00% *
	Enable	01	%3101D01%

%END%

3-36 QR Code

Read:

Format

Data characters (variable)

Multiple-scan setting			Single-scan setting
Option barcode	Option	Alpha. entry	
Read %4001M%	Disable	00	%4001D00%
	Enable	01*	%4001D01% *

%END%

3-37 Data Matrix

Read:

Format

Data characters (variable)

Multiple-scan setting			Single-scan setting
Option barcode	Option	Alpha. entry	
Read %4101M%	Disable	00	%4101D00%
	Enable	01*	%4101D01% *

%END%

3-38 Han Xin Code

Read:

Format

Data characters (variable)

Multiple-scan setting			Single-scan setting
Option barcode	Option	Alpha. entry	
Read %4201M%	Disable	00*	%4201D00% *
	Enable	01	%4201D01%

%END%

3-39 Aztec Code

Read:

Format

Data characters (variable)

Multiple-scan setting			Single-scan setting
Option barcode	Option	Alpha. entry	
Read %4301M%	Disable	00*	%4301D00% *
	Enable	01	%4301D01%

%END%

3-40 G1-G6 & C1-C3 & FN1 substitution string setting

Format of barcode data transmission:

Prefix	Code name	Preamble	Code ID	Code length	Code data	Code ID	Postamble	Suffix

Suffix string setting: The <ENTER > key is represented in different ASCII when it is applied by different OS. For a Windows/DOS OS, <enter> is represented as <CR><LF> (0x0D 0x0A); for an Apple MAC OS, <enter> is represented as <CR> (0x0D); for a Linux/Unix OS, <enter> is represented as <LF> (0x0A).

Prefix/Suffix/Preamble/Postamble string setting:

They are appended to the data automatically when a barcode is decoded.

Example: Add a symbol of "$" as a prefix for all symbols.

Steps:

1) Scan the option barcode of Prefix string setting.
2) Use the ASCII table to find the value of $→24.
3) Scan 2 and 4 from the barcode on the last page.
4) Scan END barcode.

Scanning steps: Scan the following barcodes in order.

Insert G1/G2/G3/G4 string setting: The platform offers 4 positions and 4 character strings to insert among the symbol.

Example: Set G1 string to be "AB".

Original code data	"1 2 3 4 5 6"
Output code data	"1 2 A B 3 4 5 6"

Steps:

1) Scan the option barcode of Insert G1 string setting.
2) Use the ASCII table to find the value of A→41, B→42.
3) Scan 4, 1 and 4, 2 from the barcode on the last page.
4) Scan END barcode.
5) Refer to 3-41 G1-G4 string position & Code ID position.
6) Refer to 3-8 Scan mode & some global settings.

Testing barcode:

123456

FN1 substitution string setting: The FN1 character (0x1D) in an UCC/EAN128 barcode, or a Code 128 barcode, or a GS1 DataBar barcode can be substituted with a defined string.

Truncate leading G5 string setting: By setting, a defined leading character or string can be truncated. Also a single character can be un-defined.

Repeat of a G5 character setting: While G5 is set as a single defined/un-defined character, G5 can also be set to be repeated. This setting is ignored when the truncate number is more than the barcode data characters. The option of "FF" for this setting is not active while the option of Truncate leading G5 string setting is "00".

Example: Truncate all leading zeros for all symbols.

Original code data	"0 0 0 1 2 3 4 5 6"
Output code data	"1 2 3 4 5 6"

Steps: scan the following data in order.

%8010M% 3 0 %END%

%8011M% F F %END%

%0407M% 0 5 %END%

Testing barcode:

000123456

Truncate ending G6 string setting: By setting, a defined ending character or string can be truncated. Also a single character can be un-defined.

Repeat of a G6 character setting: While G5 is set as a single defined/un-defined character, G6 can also be set to be repeated. This setting is ignored when the truncate number is more than the barcode data characters. The option of "FF" for this setting is not active while the option of Truncate ending G6 string setting is "00".

Single character C1/C2 replacement: By setting, a defined character in the data string can be replaced by another defined character. The C1 and C2 replacement can be applied simultaneously.

Example: Replace all the "A" character in a data string with "B" character.

Original code data	"1 2 3 A 5 A"
Output code data	"1 2 3 B 5 B"

Steps: scan the following barcodes in order. The ASCII value for "A" is 41, and the ASCII value for "B" is 42.

%8014M% 4 1 4

2

%END%

Testing barcode:

123A5A

Multiple characters C3 replacement: By setting, a number of defined characters in the data string can be replaced by other defined characters. The maximum number of characters to replace is 11.

Example: Replace all the “A” character in a data string with “B” character; replace “C” with “D”; replace “E” with “F”.

Original code data	“1 2 3 A 4 C 5 6 E 7 8”
Output code data	“1 2 3 B 4 D 5 6 F 7 8”

Steps: scan the following barcodes in order. The ASCII value for “A” is 41, for “B” is 42, for “C” is 43, for “D” is “44”, for “E” is 45, and for “F” is 46.

%8016M%

4

1

4

2

4

3

4

4

4

5

4

6

%END%

Testing barcode:

123A4C56E78

Multiple-scan setting			Single-scan setting
Option barcode	Option	Alpha. Entry	
Prefix string setting %8001M%	0-22 characters	00-FF$_{16}$	
	None	00*	%8001H00% *
Suffix string setting %8002M%	0-22 characters	00-FF$_{16}$	
	<ENTER>	0D0A*	
Preamble string setting %8003M%	0-22 characters	00-FF$_{16}$	
	None	00*	%8003H00% *
Postamble string setting %8004M%	0-22 characters	00-FF$_{16}$	
	None	00*	%8004H00% *
Insert G1 string setting %8005M%	0-22 characters	00-FF$_{16}$	
	None	00*	%8005H00% *
Insert G2 string setting %8006M%	0-22 characters	00-FF$_{16}$	
	None	00*	%8006H00% *
Insert G3 string setting %8007M%	0-22 characters	00-FF$_{16}$	
	None	00*	%8007H00% *
Insert G4 string setting %8008M%	0-22 characters	00-FF$_{16}$	
	None	00*	%8008H00% *
FN1 substitution string setting %8009M%	0-4 characters	00-FF$_{16}$	
	<SP>	20*	%8009H20% *
Truncate leading G5 string setting %8010M%	A un-defined character	00	%8010H00%
	1-22 defined characters	01-7F$_{16}$	
	<0>	30*	%8010H30% *
Repeat of a G5 character setting	Once	01*	%8011H01% *

Multiple-scan setting			Single-scan setting
Option barcode	Option	Alpha. Entry	
%8011M%	Defined times	01-22	
	Un-defined times (All)	FF	%8011HFF%
Truncate ending G6 string setting %8012M%	A un-defined character	00	%8012H00%
	1-22 defined characters	$01\text{-}7F_{16}$	
	<0>	30*	%8012H30% *
Repeat of a G6 character setting %8013M%	Once	01*	%8013H01% *
	Defined times	01-22	
	Un-defined times (All)	FF	%8013HFF%
Single character C1 replacement %8014M%	<0000>	0000*	
		$0000\text{-}FFFF_{16}$	
Single character C2 replacement %8015M%	<0000>	0000*	
		$0000\text{-}FFFF_{16}$	
Multiple characters C3 replacement %8016M%	-	0000*	
		-	

%END%

3-41 G1-G4 string position & Code ID position

Format of barcode data transmission:

Prefix	Code name	Preamble	Code ID	Code length	Code data	Code ID	Postamble	Suffix

Insert G1/G2/G3/G4 string position: The platform offers 4 positions to insert strings among the symbol. In case of the insertion position is greater than the length of the symbol, the insertion of string is not effective.

Code ID position: It is allowed to select different positions of code ID placement.

Multiple-scan setting			Single-scan setting
Option barcode	Option	Alpha. entry	
Insert G1 string position %8101M%	00-99	00-99	
		00*	%8101D00% *
Insert G2 string position %8102M%	00-99	00-99	
		00*	%8102D00% *
Insert G3 string position %8103M%	00-99	00-99	
		00*	%8103D00% *
Insert G4 string position %8104M%	00-99	00-99	
		00*	%8104D00% *
Code ID position %8105M%	Before code data	00*	%8105D00% *
	After code data	01	%8105D01%

%END%

3-42 String transmission

Note: The information in this chapter is closely related to String setting.

Format of barcode data transmission:

Prefix	Code name	Preamble	Code ID	Code length	Code data	Code ID	Postamble	Suffix

Prefix transmission: By setting Enable, prefix will be appended before the data transmitted.

Suffix transmission: By setting Enable, suffix will be appended after the data is transmitted.

Code name transmission: By setting Enable, code name will be transmitted before code data.

Preamble transmission: By setting Enable, preamble will be appended before the data transmitted.

Postamble transmission: By setting Enable, postamble will be appended after the data is transmitted.

Code ID transmission: Code ID can be transmitted in the format of either Proprietary ID or AIM ID. Refer to 1-2 Default setting for each barcode.

Code length transmission: The length of code data string can be transmitted before the code data when Enable is selected. The length is represented by a number with two digits.

Case conversion: The characters within code data or the whole output string can be set in either upper case or lower case.

FN1 substitution transmission: The platform supports a FN1 substitution feature for keyboard wedge, USB and RS-232 interface. The replacement string of FN1 can be chosen by user (see 3-40 G1-G6 & C1-C3 & FN1 substitution string setting).

All-non-printable-character string transmission with string setting: By setting enable, all string settings, e.g. Preamble transmission or Insert G1 string setting, are active for an all-non-printable-character string. Here a non-printable character means a character with ASCII value between 0x00 to 0x1F.

Transmit the first N data characters only: The platform supports to only transmit the first N data characters of a barcode. The number of N can be set as a digit between 1 and 99.

Transmit the last N data characters only: The platform supports to only transmit the last N data characters of a barcode. The number of N can be set as a digit between 1 and 99.

Multiple-scan setting			Single-scan setting
Option barcode	Option	Alpha. entry	
Prefix transmission %8201M%	Disable	00*	%8201D00% *
	Enable	01	%8201D01%
Suffix transmission %8202M%	Disable	00	%8202D00%
	Enable	01*	%8202D01% *
Code name transmission %8203M%	Disable	00*	%8203D00% *
	Enable	01	%8203D01%
Preamble transmission %8204M%	Disable	00*	%8204D00% *
	Enable	01	%8204D01%
Postamble transmission %8205M%	Disable	00*	%8205D00% *
	Enable	01	%8205D01%
Code ID transmission %8206M%	Disable	00*	%8206D00% *
	Proprietary ID	01	%8206D01%
	AIM ID	02	%8206D02%
Code length transmission %8207M%	Disable	00*	%8207D00% *
	Enable	01	%8207D01%
Case conversion %8208M%	Disable	00*	%8208D00% *
	Upper (data only)	01	%8208D01%
	Lower (data only)	02	%8208D02%
	Upper (whole string)	03	%8208D03%
	Lower (whole string)	04	%8208D04%
FN1 substitution transmission %8209M%	Disable	00*	%8209D00% *
	Keyboard wedge/USB	01	%8209D01%

Multiple-scan setting			Single-scan setting
Option barcode	Option	Alpha. entry	
	RS-232	02	%8209D02%
	Keyboard wedge /USB/RS-232	03	%8209D03%
All-non-printable-character string transmission with string setting %8210M%	Disable	00*	%8210D00% *
	Enable	01	%8210D01%
Transmit the first N data characters only %8211M%	All	99*	%8211D99% *
	01-99		
Transmit the last N data characters only %8212M%	All	99*	%8212D99% *
	01-99		

%END%

4 Other settings

4-1 General settings

No.	Function	Description	Setting
1	Enable voice broadcast	After a successful decoding, the platform will broadcast voice.	%9201D01%
2	Disable voice broadcast	After a successful decoding, the platform will not broadcast voice.	%9201D00%
3	Type A of voice	After a successful decoding, the platform will broadcast type A of voice.	%9202D00%
4	Type B of voice	After a successful decoding, the platform will broadcast type B of voice.	%9202D01%
5	Delay 1 second to broadcast voice	If you every 1 second scan a barcode, it will broadcast voice every time.	%9203D01%
6	Delay 6 seconds to broadcast voice	If you every 6 seconds scan a barcode, it will broadcast voice every time.	%9203D06%

4-2 Volume of voice broadcast

Description	Setting
Level 1 (Minimum)	%9205D00%
Level 2	%9205D01%
Level 3	%9205D02%
Level 4	%9205D03%
Level 5	%9205D04%
Level 6	%9205D05%
Level 7	%9205D06%
Level 8 (Maximum)	%9205D07%

5 Maintenance

Cleaning the exit window is the only maintenance required. A dirty window may affect scanning accuracy.

1) Do not allow any abrasive material to touch the window.
2) Remove any dirt particles with a damp cloth.
3) Wipe the window using a tissue moistened with water.
4) Do not spray water or other cleaning liquids directly into the window.
5) Use a piece of soft and dry cloth when cleaning the platform.

6 ASCII Table

	for keyboard wedge		for RS-232	
H / L	0	1	0	1
0	Null		NUL	DLE
1	Up	F1	SOH	DC1
2	Down	F2	STX	DC2
3	Left	F3	ETX	DC3
4	Right	F4	EOT	DC4
5	PgUp	F5	ENQ	NAK
6	PgDn	F6	ACK	SYN
7		F7	BEL	ETB
8	Bs	F8	BS	CAN
9	Tab	F9	HT	EM
A		F10	LF	SUB
B	Home	Esc	VT	ESC
C	End	F11	FF	FS
D	Enter	F12	CR	GS
E	Insert	Ctrl+	SO	RS
F	Delete	Alt+	SI	US

Note: The 2nd and the 3rd columns above are used for keyboard wedge only.

H / L	2	3	4	5	6	7
0	SP	0	@	P	`	p
1	!	1	A	Q	a	q
2	“	2	B	R	b	r
3	#	3	C	S	c	s
4	$	4	D	T	d	t
5	%	5	E	U	e	u
6	&	6	F	V	f	v
7	‘	7	G	W	g	w
8	(	8	H	X	h	x
9	)	9	I	Y	i	y
A	*	:	J	Z	j	z
B	+	;	K	[	k	{
C	,	<	L	\	l	|
D	-	=	M	]	m	}
E	.	>	N	^	n	~
F	/	?	O	_	o	DEL

Example: ASCII “A” = “41”.

7 Barcode representing non-printable character

Notes to make the following barcode:

1. According to different barcode printing software, the method of printing following barcode is different.
2. If using CODESOFT software, firstly read the information through “Help→Index→Code128→Special input syntax”. Also refer to ASCII table. For example, if we wish to make “F1” barcode, select “Code128”, then select “CODE A” type, and input “{DC1}” as data.

Up ↑

Down ↓

Left ←

Right →

Page Up

Page Down

Backspace

Tab

Home

End

Enter

Insert

Delete

F1

F2

F3

F4

F5

F6

F7

F8

F9

F10

Esc

F11

F12

8 Test symbols

UPC-A

6 59871 23231 9

UPC-E

0 232310 7

UPC-E1

(Default setting: Disable)

1 6 5 4 3 2 1 1

EAN-13

1 234567 891019

ISBN/ISSN

9 780194 315104

EAN-8

0123 4510

Code 39

0189-.+$AZ

Interleaved 2 of 5

0123456789

Industrial 2 of 5

(Default setting: Disable)

0123456789

Matrix 2 of 5

9876543210

Codabar

a01+-:./$89a

Code 128

01AZ[+-*/]za98

UCC/EAN 128

01AZ[}+-az54

ISBT 128

=1234 56789

Code 93

01AZ+-/*az89

Code 11

(Default setting: Disable)

123456789-0

MSI/Plessey

(Default setting: Disable)

0123456789

UK/Plessey

(Default setting: Disable)

01ABEF89

China Post

01234567890

GS1 DataBar (GS1 DataBar Truncated)

(01) 12345678901231

GS1 DataBar Limited

(01) 1 2345678 90126 2

GS1 DataBar Expanded

Ab_09+yZ

PDF417

12=890ab-+%xyz

QR code

1234567890ABCD-+()&*%^@#$!XYZ

Data Matrix

123890abc-+=&*%^!mdo

Aztec Code

(Default setting: Disable)

12345678901234567890

Han Xin Code

(Default setting: Disable)

1234567890Hanxin

9 Return default parameters & firmware version list

%%%DEF

Default value initialization

If you wish to return the platform to all the factory default settings, scan the barcode above.

%%%VER

Firmware version list

If you wish to display the firmware version, scan the barcode above.

10 Configuration alphanumeric entry barcode

0

1

2

3

4

5

6

7

8

9

A

B

C

D

E

F

To finish parameter setting, please scan the bar code below.

%END%