TC52

Touch Computer

Product Reference Guide

ZEBRA

MN-004224-02EN Rev A

2024/05/23

ZEBRA and the stylized Zebra head are trademarks of Zebra Technologies Corporation, registered in many jurisdictions worldwide. All other trademarks are the property of their respective owners. ©2024 Zebra Technologies Corporation and/or its affiliates. All rights reserved.

Information in this document is subject to change without notice. The software described in this document is furnished under a license agreement or nondisclosure agreement. The software may be used or copied only in accordance with the terms of those agreements.

For further information regarding legal and proprietary statements, please go to:

SOFTWARE: zebra.com/informationpolicy.
COPYRIGHTS: zebra.com/copyright.
PATENTS: ip.zebra.com.
WARRANTY: zebra.com/warranty.
END USER LICENSE AGREEMENT: zebra.com/eula.

Terms of Use

Proprietary Statement

This manual contains proprietary information of Zebra Technologies Corporation and its subsidiaries (“Zebra Technologies”). It is intended solely for the information and use of parties operating and maintaining the equipment described herein. Such proprietary information may not be used, reproduced, or disclosed to any other parties for any other purpose without the express, written permission of Zebra Technologies.

Product Improvements

Continuous improvement of products is a policy of Zebra Technologies. All specifications and designs are subject to change without notice.

Liability Disclaimer

Zebra Technologies takes steps to ensure that its published Engineering specifications and manuals are correct; however, errors do occur. Zebra Technologies reserves the right to correct any such errors and disclaims liability resulting therefrom.

Limitation of Liability

In no event shall Zebra Technologies or anyone else involved in the creation, production, or delivery of the accompanying product (including hardware and software) be liable for any damages whatsoever (including, without limitation, consequential damages including loss of business profits, business interruption, or loss of business information) arising out of the use of, the results of use of, or inability to use such product, even if Zebra Technologies has been advised of the possibility of such damages. Some jurisdictions do not allow the exclusion or limitation of incidental or consequential damages, so the above limitation or exclusion may not apply to you.

Contents

About This Guide **13**
Configurations 13
Notational Conventions 14
Icon Conventions 14
Service Information 14
Determining Software Version 15
Determining the Serial Number 15

Getting Started **16**
Unpacking the Device 16
Features 17
Setting Up the Device 18
Installing a microSD Card 19
Installing the Battery 20
Charging the Battery 21
Charging Indications 21
Replacing the Battery 22
Replacing the microSD Card 23

Using the Device **25**
Home Screen 25
Setting the Home Screen Rotation 28
Status Bar 28
Managing Notifications 31
Opening the Quick Access Panel 32

Editing the Quick Access Tiles....36
Battery Management....37
Low Battery Notification....37
Turning Off the Radios....37
Interactive Sensor Technology....37
Waking the Device....38
USB Communication....38
Transferring Files....38
Transferring Photos....39
Disconnecting from the Host Computer....39

Settings....40
Accessing Settings....40
Display Settings....40
Setting the Screen Brightness Automatically....40
Setting the Screen Brightness Manually....40
Setting Night Light....41
Setting Screen Rotation....41
Setting Screen Timeout....41
Setting Lock Screen Notifications....42
Setting Font Size....42
Setting Display Size....42
Notification LED Brightness Level....42
Setting Touch Panel Mode....43
Setting Date and Time....43
General Sound Setting....44
Sound Options....44
Zebra Volume Controls....45
Setting Wake-Up Sources....45
Remapping a Button....45
Remappable Keys....46
Keyboards....46
Keyboard Configuration....47
Using the Android and Gboard Keyboards....47

Enterprise Keyboard....47
Language Usage....48
Changing the Language Setting....48
Adding Words to the Dictionary....48
Notifications....49
Setting App Notifications....49
Viewing Notifications....50
Controlling Lock Screen Notifications....50
Enabling Blink Light....50

Applications....51
Installed Applications....51
Accessing Apps....52
Switching Between Recent Apps....52
Battery Manager....53
Opening Battery Manager....53
Battery Manager Information Tab....53
Battery Manager Swap Tab....55
Camera....55
Taking Photos on Android 11....55
Taking Photos on Android 13....57
Taking a Panoramic Photo....59
Recording Videos on Android 11....59
Recording Videos on Android 13....61
Photo Settings....62
Video Settings....66
DWDemo....68
DWDemo Icons....69
Selecting a Scanner....69
PTT Express Voice Client....69
PTT Express User Interface....70
PTT Audible Indicators....71
PTT Notification Icons....71
Enabling PTT Communication....71

Selecting a Talk Group....72
PTT Communication....72
Creating a Group Call....72
Responding with a Private Response....73
Disabling PTT Communication....73
RxLogger....73
RxLogger Configuration....73
Configuration File....73
Enabling Logging....74
Disabling Logging....74
Extracting Log Files....74
Backing Up Data....74
RxLogger Utility....75

Data Capture....76
Imaging....76
Digital Camera....76
Operational Modes....77
Scanning Considerations....77
Scanning with Internal Imager....78
Scanning with Internal Camera....79
Scanning with the RS507/RS507X Hands-Free Imager....80
Scanning with the RS6000 Bluetooth Ring Scanner....83
Scanning with the RS5100 Ring Scanner....85
Scanning with the DS3678 Bluetooth Scanner....87
Scanning with the LI3678 Linear Imager....89
Scanning with the DS2278 Digital Scanner....90
Scanning with the DS8178 Digital Scanner....91
Pairing a Bluetooth Ring Scanner....92
Pairing in SSI Mode Using Near Field Communication....93
Pairing in HID Mode Using Near Field Communication....93
Pairing Using Simple Serial Interface (SSI)....94
Pairing Using Bluetooth Human Interface Device....95
Pairing a Bluetooth Scanner....96

Pairing Using Simple Serial Interface....96
Pairing Using Bluetooth Human Interface Device....96
DataWedge....97
Enabling DataWedge....97
Disabling DataWedge....97
Supported Decoders....98

Wireless....105
Wireless Local Area Network....105
Connecting to a Wi-Fi Network....106
Removing a Wi-Fi Network....107
WLAN Configuration....107
Bluetooth....112
Adaptive Frequency Hopping....113
Security....113
Bluetooth Profiles....114
Bluetooth Power States....114
Bluetooth Radio Power....115
Enabling Bluetooth....115
Disabling Bluetooth....115
Discovering Bluetooth Device(s)....115
Changing the Bluetooth Name....116
Connecting to a Bluetooth Device....116
Selecting Profiles on the Bluetooth Device....116
Unpairing a Bluetooth Device....116
Cast....116
Near Field Communication....117
Reading NFC Cards....117
Sharing Information Using NFC....118
Enterprise NFC Settings....119

Accessories....120
Device Accessories....120

Main Battery Charging....123
Spare Battery Charging....123
Charging Temperature....124
1-Slot USB Cradle....124
Setup....125
Charging the Device in the Cradle....126
Inserting a TC5X with Rugged Boot into Cradle....127
1-Slot Workstation Docking Cradle....127
Setup....129
Ethernet Settings....130
Scanner Setup....131
Security....132
Using the Workstation Cradle....132
Changing Monitor Resolution....132
Charging the Device in the Cradle....132
Inserting a TC5X with Rugged Boot into Cradle....133
2-Slot USB/Ethernet Cradle....133
Setup....135
Ethernet Settings....135
Inserting a TC5X with Rugged Boot into Cradle....139
Charging the Device in the Cradle....139
4-Slot Charge Only Cradle with Battery Charger....140
Setup....142
Charging the Device in the Cradle....142
Inserting a TC5X with Rugged Boot into Cradle....143
5-Slot Charge Only Cradle....143
Setup....145
Charging the Device in the Cradle....145
Inserting a TC5X with Rugged Boot into Cradle....146
5-Slot Ethernet Cradle....146
Setup....148
Daisy-chaining Ethernet Cradles....148
Ethernet Settings....149
Charging the Device in the Cradle....151

Inserting a TC5X with Rugged Boot into Cradle....152
Establishing Ethernet Connection....152
4-Slot Battery Charger....153
Single Charger Setup....153
Two Charger Setup....154
Charging Spare Batteries....156
Rugged Boot....157
Installation....157
Installing Plastic Stylus....158
Charging with Cradles....159
Basic Hand Strap Kit....160
Installation....161
Removal....162
2.5 mm Audio Adapter....162
3.5 mm Audio Adapter....163
Rugged Charge/USB Cable....165
Connecting Rugged Charge/USB Cable to Device....165
Connecting to TC5X with Rugged Boot....166
USB Communication....167
Charging the Device....167
Disconnecting the Rugged Charge/USB Cable....168
Trigger Handle....169
Installing the Rugged Boot....169
Removing the Device from the Trigger Handle....171
Installing the Optional Lanyard....172
Inserting the Device into the Trigger Handle....173
Power Supply....174
5-Slot Cradle Rack Installation....174
Four 4-Slot Battery Charger Bracket Installation....177
Rack Mount Installation....180
Wall Installation....183
Bottom Tray Assembly....183
Mounting the Bracket....184

Application Deployment....186
Security....186
Secure Certificates....186
Installing a Secure Certificate....186
Configuring Credential Storage Settings....187
Android Development Tools....187
Android Development Workstation....187
Enabling Developer Options....187
EMDK for Android....188
StageNow for Android....188
GMS Restricted....188
ADB USB Setup....189
Application Installation Methods....190
Installing Applications Using the USB Connection....190
Installing Applications Using the Android Debug Bridge....191
Installing Applications Using Wireless ADB....191
Installing Applications Using a microSD Card....194
Uninstalling an Application....195
Android System Update....195
Performing a System Update Using microSD Card....195
Performing a System Update Using ADB....196
Verifying System Update Installation....197
Android-Enterprise Reset....197
Performing an Enterprise Reset Using microSD Card....197
Performing an Enterprise Reset Using ADB....197
Android Factory Reset....198
Performing a Factory Reset Using microSD Card....199
Performing a Factory Reset Using ADB....199
Android Storage....200
Random Access Memory....200
Internal Storage....201
External Storage....201
Enterprise Folder....202
Managing Apps....202

App Details....203
Managing Downloads....203

Maintenance and Troubleshooting....204
Maintaining the Device....204
Display Best Practices....204
Best Practices for Enterprise Mobile Computing Devices Operating in Hot Environments and Direct Sunlight....205
Battery Safety Guidelines....205
Cleaning Instructions....206
Cleaning and Disinfecting Guidelines....206
Approved Cleaning and Disinfectant Agents....207
Approved Cleaning and Disinfectant Agents for TC52-HC....207
Special Cleaning Notes....207
Cleaning Frequency....207
Cleaning the Device....208
Cleaning Cradle Connectors....209
Troubleshooting....209
Resetting the Device....209
Device Troubleshooting....210
1-Slot Charge Only Cradle Troubleshooting....212
1-Slot Workstation Docking Cradle Troubleshooting....213
2-Slot USB/Ethernet Cradle Troubleshooting....214
5-Slot Charge Only Cradle Troubleshooting....215
5-Slot Ethernet Cradle Troubleshooting....215
4-Slot Battery Charger Troubleshooting....216

Technical Specifications....218
SE4710 Decode Distances....218
I/O Connector Pin-Outs....219
1-Slot Charge Only Cradle Technical Specifications....219
1-Slot Workstation Docking Cradle Technical Specifications....220
2-Slot USB/Ethernet Cradle Technical Specifications....221

4-Slot Charge Only Cradle with Battery Charger Technical Specifications.....221
5-Slot Charge Only Cradle Technical Specifications.....222
5-Slot Ethernet Cradle Technical Specifications.....223
4-Slot Battery Charger Technical Specifications.....223
Trigger Handle Technical Specifications.....224
Rugged Charge/USB Cable Technical Specifications.....224

About This Guide

This guide provides information about setting up and using the TC52 touch computers. Some screens shown in this guide may differ from the actual screens shown on the device.

This guide includes Android operating system (OS) 11 and above. Android 11 is the baseline, and updated OS releases are indicated in the content where applicable.

Configurations

This guide covers the following configurations:

Table 1 Configurations

Configuration	Radios	Display	Memory	Data Capture Options	Operating System
TC520K-1	WLAN: 802.11 a/b/g/n//ac/ d/h/i/r/k/v3/ w WPAN: Bluetooth v5.0 Low Energy	5.0” High Definition (1280 x 720) LCD	4 GB RAM / 32 GB Flash	2D imager (SE-4710) and integrated NFC	Android-based, Google ™ Mobile Services (GMS)
TC520K-1	WLAN: 802.11 a/b/g/n//ac/ d/h/i/r/k/v3/ w WPAN: Bluetooth v5.0 Low Energy	5.0” High Definition (1280 x 720) LCD	4 GB RAM / 32 GB Flash	2D imager (SE-4710) and integrated NFC	Android-based, AOSP (China only)

Notational Conventions

The following notational conventions make the content of this document easy to navigate.

- **Bold** text is used to highlight the following:
  - Dialog box, window, and screen names
  - Dropdown list and list box names
  - Checkbox and radio button names
  - Icons on a screen
  - Key names on a keypad
  - Button names on a screen
- Bullets (•) indicate:
  - Action items
  - List of alternatives
  - Lists of required steps that are not necessarily sequential.
- Sequential lists (for example, those that describe step-by-step procedures) appear as numbered lists.

Icon Conventions

The documentation set is designed to give the reader more visual clues. The following visual indicators are used throughout the documentation set.

NOTE: The text here indicates information that is supplemental for the user to know and that is not required to complete a task.

IMPORTANT: The text here indicates information that is important for the user to know.

CAUTION: If the precaution is not heeded, the user could receive a minor or moderate injury.

WARNING: If danger is not avoided, the user CAN be seriously injured or killed.

DANGER: If danger is not avoided, the user WILL be seriously injured or killed.

Service Information

If you have a problem with your equipment, contact Zebra Global Customer Support for your region. Contact information is available at: zebra.com/support.

When contacting support, please have the following information available:

- Serial number of the unit
- Model number or product name
- Software type and version number

Zebra responds to calls by email, telephone, or fax within the time limits set forth in support agreements.

If your problem cannot be solved by Zebra Customer Support, you may need to return your equipment for servicing and will be given specific directions. Zebra is not responsible for any damages incurred during shipment if the approved shipping container is not used. Shipping the units improperly can possibly void the warranty.

If you purchased your Zebra business product from a Zebra business partner, contact that business partner for support.

Determining Software Version

Before contacting Customer Support, determine the current software version on your device.

1. Swipe down from the Status bar with two fingers to open the Quick Access panel, and then touch ⚙.
2. Touch **About phone**.
3. Scroll to view the following information:
   - Device name
   - Battery information
   - Emergency information
   - SW components
   - Legal information
   - Model & hardware
   - Android version
     - Android security patch level
     - Google Play system update
     - Kernel version
     - Build number

Determining the Serial Number

Before contacting Customer Support, determine the serial number of your device.

1. Touch **About phone**.
2. Touch **Model & hardware**.

Getting Started

This section provides information for getting the device up and running for the first time.

Unpacking the Device

Unpacking the device from the box.

1. Carefully remove all protective material from the device and save the shipping container for later storage and shipping.
2. Verify that the following were received:
   - Touch computer
   - ≥15.48 Watt hours (typical) / ≥4,150 mAh PowerPrecision+ Lithium-ion battery
   - Regulatory Guide.
3. Inspect the equipment for damage. If any equipment is missing or damaged, contact the Global Customer Support center immediately.
4. Prior to using the device for the first time, remove the protective shipping film that covers the scan window, display and camera window.

Features

This section lists the features of the TC52 touch computer.

Figure 1 Front View

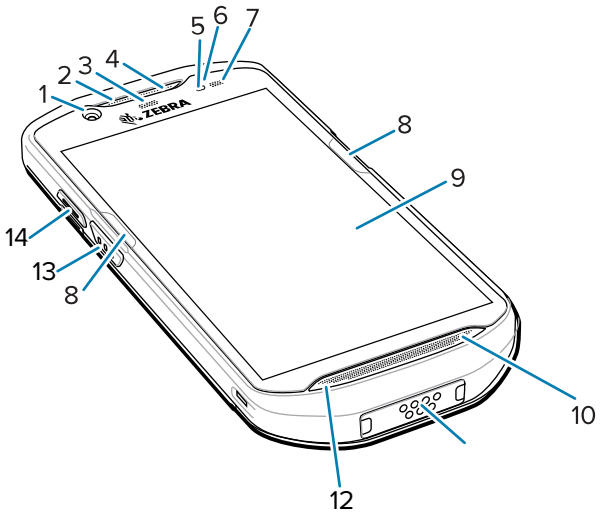

Number	Item	Description
1	Front camera	Takes photos and videos.
2	Receiver	Use for audio playback in Handset mode.
3	Data capture LED	Indicates data capture status.
4	Microphone	Use for communications in Speakerphone mode.
5	Proximity sensor	Determines proximity for turning off display when in handset mode.
6	Light sensor	Determines ambient light for controlling display backlight intensity.
7	Charging/ notification LED	Indicates battery charging status while charging and application generated notifications.
8	ActiveEdge Touch Zone	Programmable dynamic soft key positioned near the perimeter of the display for one-touch access to a frequently used application or function.
9	Touch screen	Displays all information needed to operate the device.
10	Speakers	Provides audio output for video and music playback. Provides audio in speakerphone mode.
11	Interface connector	Provides USB host and client communications, audio and device charging via cables and accessories. CAUTION: Do not remove the interface connector to ensure proper device sealing.
12	Microphone	Use for communications in Handset mode.
13	Scan button	Initiates data capture (programmable).
14	PTT Button	Initiates push-to-talk communications (programmable).

Figure 2 Rear View

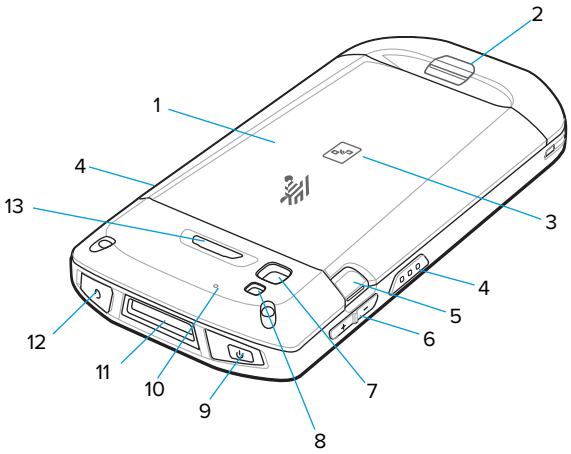

Table 2 Rear View

Number	Item	Description
1	Battery	≥15.48 Watt hours (typical) / ≥ 4,150 mAh PowerPrecision+ Lithium-ion battery.
2	Basic hand strap mount	Provides mounting point for Basic Hand Strap accessory.
3	NFC antenna	Provides communication with other NFC-enabled devices.
4	Scan button	Initiates data capture (programmable).
5	Battery release latches	Press to remove the battery.
6	Volume up/ down button	Increase and decrease audio volume (programmable).
7	Rear camera	Takes photos and videos.
8	Camera flash	Provides illumination for the camera.
9	Power button	Turns the display on and off. Press and hold to reset the device, power off or swap battery.
10	Microphone	Use for noise cancellation.
11	Exit window	Provides data capture using the imager.
12	Headset jack	For audio output to headset.
13	Programmable button	Programmable.

Setting Up the Device

To start using the device for the first time:

1. Install a micro secure digital (SD) card (optional).
2. Install hand strap (optional).

3. Install the battery.
4. Charge the device.
5. Power on the device.

Installing a microSD Card

The microSD card slot provides secondary non-volatile storage. The slot is located under the battery pack. Refer to the documentation provided with the card for more information, and follow the manufacturer's recommendations for use.

CAUTION—ESD: Follow proper electrostatic discharge (ESD) precautions to avoid damaging the microSD card. Proper ESD precautions include, but are not limited to, working on an ESD mat and ensuring that the operator is properly grounded.

1. Lift the access door.

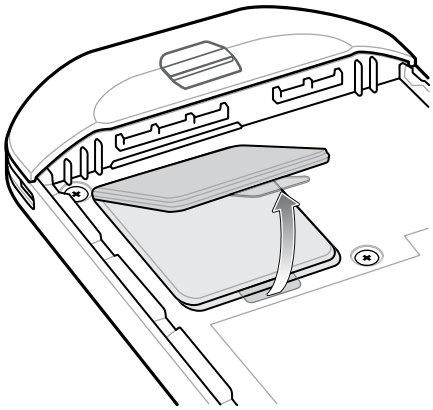

2. Slide the microSD card holder to the unlock position.

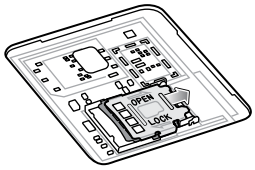

3. Lift the microSD card holder.

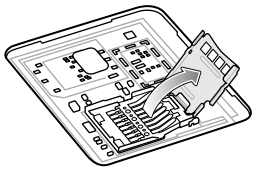

4. Insert the microSD card into the card holder door ensuring that the card slides into the holding tabs on each side of the door.

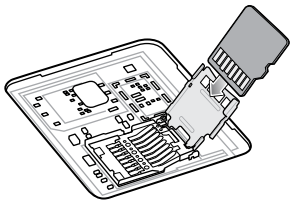

5. Close the microSD card holder and lock into position.

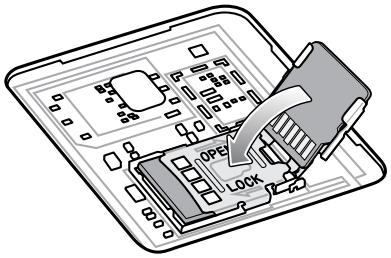

CAUTION: Access door must be replaced and securely seated to ensure proper device sealing.

6. Re-install the access door.

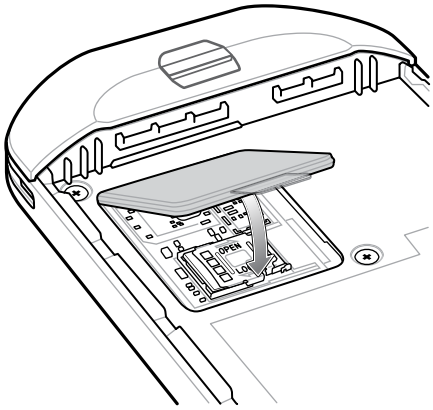

Installing the Battery

This section describes how to install the battery into the TC52 device.

NOTE: User modification of the device, particularly in the battery well, such as labels, asset tags, engravings, stickers, etc., may compromise the intended performance of the device or accessories. Performance levels such as sealing (Ingress Protection (IP)), impact performance (drop and tumble), functionality, temperature resistance, etc. could be effected. DO NOT put any labels, asset tags, engravings, stickers, etc. in the battery well.

1. Insert the battery, bottom first, into the battery compartment in the back of the device.
2. Press the battery down until it snaps into place.

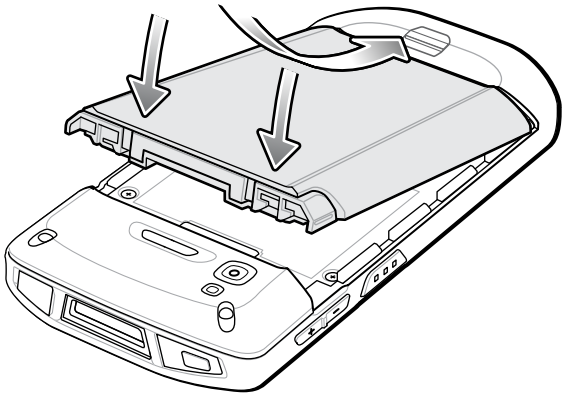

Charging the Battery

Before using the device for the first time, charge the main battery until the green Charging/Notification light emitting diode (LED) remains lit. To charge the device using a cable or a cradle with the appropriate power supply.

For information about the accessories available for the device see Accessories for more information. The battery charges from fully depleted to 90% in approximately 2.5 hours, and from fully depleted to 100% in approximately three hours.

NOTE:

In many cases the 90% charge provides plenty of charge for daily use. A full 100% charge lasts for approximately 14 hours of use.

To achieve the optimal fast charging results use only Zebra charging accessories and batteries. Charge batteries at room temperature with the device in sleep mode.

Charge batteries in temperatures from 5°C to 40°C (41°F to 104°F). The device or accessory always performs battery charging in a safe and intelligent manner. At higher temperatures (for example: approximately +37°C (+98°F)) the device or accessory may for small periods of time alternately enable and disable battery charging to keep the battery at acceptable temperatures. The device or accessory indicates when charging is disabled due to abnormal temperatures via its LED and a notification appears on the display.

To charge the main battery:

1. Connect the charging accessory to the appropriate power source.
2. Insert the device into a cradle or attach it to a cable. The device turns on and begins charging. The Charging/Notification LED blinks amber while charging, then turns solid green when fully charged.

Charging Indications

The charging/notification LED indicates charging status.

Table 3 Charging/Notification LED Charging Indicators

State	LED	Indications
Off		Device is not charging. Device is not inserted correctly in the cradle or connected to a power source. Charger/cradle is not powered.
Slow Blinking Amber (1 blink every 4 seconds)		Device is charging.
Slow Blinking Red (1 blink every 4 seconds)		Device is charging but the battery is at end of useful life.
Solid Green		Charging complete.
Solid Red		Charging complete but the battery is at end of useful life.

Table 3 Charging/Notification LED Charging Indicators (Continued)

State	LED	Indications
Fast Blinking Amber (2 blinks/second)		Charging error, e.g.: • Temperature is too low or too high. • Charging has gone on too long without completion (typically eight hours).
Fast Blinking Red (2 blinks/second)		Charging error but the battery is at end of useful life., e.g.: • Temperature is too low or too high. • Charging has gone on too long without completion (typically eight hours).

Replacing the Battery

Replacing the battery in the TC52 device.

NOTE: User modification of the device, particularly in the battery well, such as labels, asset tags, engravings, stickers, etc., may compromise the intended performance of the device or accessories. Performance levels such as sealing (Ingress Protection (IP)), impact performance (drop and tumble), functionality, temperature resistance, etc. could be effected. DO NOT put any labels, asset tags, engravings, stickers, etc. in the battery well.

CAUTION: Do not add or remove microSD card during battery replacement.

1. Press the Power button until the menu appears.
2. Touch **Battery Swap**.
3. Follow the on-screen instructions.

WARNING: Do not remove the battery until after the red LED completely turns off. This may result in loss of data.

4. Wait for the red LED to completely turn off.
5. If hand strap is attached, remove hand strap.
6. Press the two battery latches in.

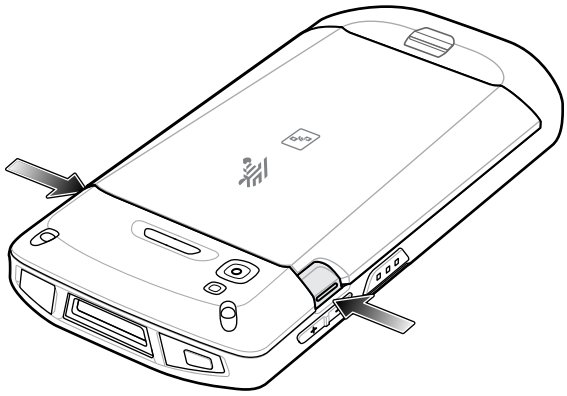

7. Lift the battery from the device.

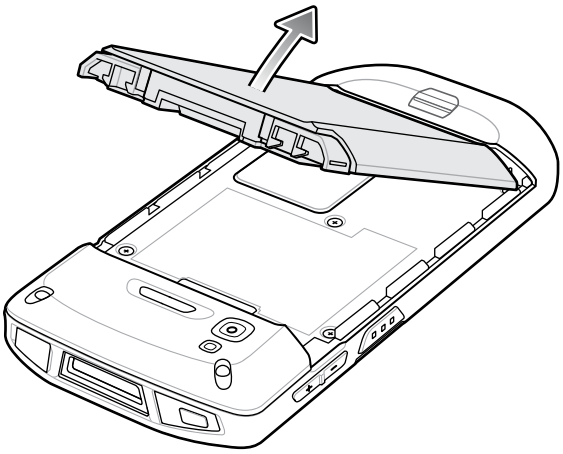

CAUTION: Replace the battery within 75 seconds. After 75 seconds the device reboots and data may be lost.

8. Insert the replacement battery, bottom first, into the battery compartment in the back of the device.
9. Press the battery down until the battery release latches snap into place.
10. Replace the hand strap, if required.
11. Press the Power button to turn on the device.

Replacing the microSD Card

Use these procedures to replace a microSD card.

To replace the microSD card:

1. Press the Power button until the menu appears.
2. Touch **Power off**.
3. Touch **OK**.
4. If hand strap is attached, slide the hand strap clip up toward the top of the device and then lift.
5. Press the two battery latches in.
6. Lift the battery from the device.

7. Lift the access door.

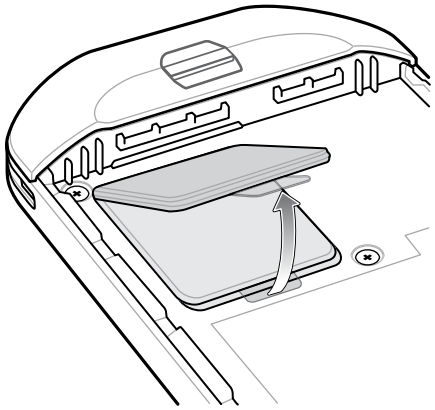

8. Remove microSD card from the holder.
9. Insert the replacement microSD card.

CAUTION: Access door must be replaced and securely seated to ensure proper device sealing.

10. Replace the access door.

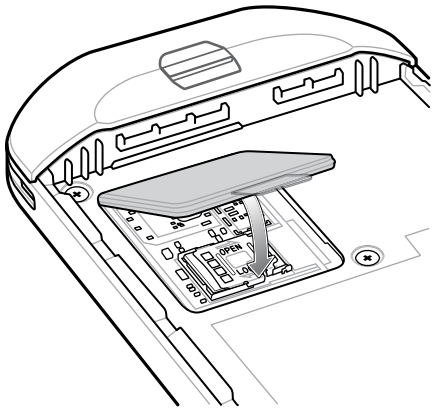

11. Insert the battery, bottom first, into the battery compartment in the back of the device.
12. Press the battery down until the battery release latches snap into place.
13. Replace the hand strap, if required.
14. Press and hold the Power button to turn on the device.

Using the Device

This section explains how to use your device.

Home Screen

Turn on the device to display the Home screen. Depending on how your system administrator configured your device, your Home screen may appear differently than the graphics in this section.

After the device goes into Sleep mode, the Home screen displays with the lock icon. Touch the screen and swipe up to unlock. The Home screen provides four additional screens to place widgets and shortcuts. Touch and hold on an icon, and then move it for the option to place the icon on one of the other screens. Swipe the Home screen left or right to view the additional screens.

NOTE: By default, AOSP devices do not have the same icons on the Home screen as GMS devices. Icons are shown below for example only.

Home screen icons can be configured by the user and may look different than shown.

Figure 3 Android 11 Home Screen

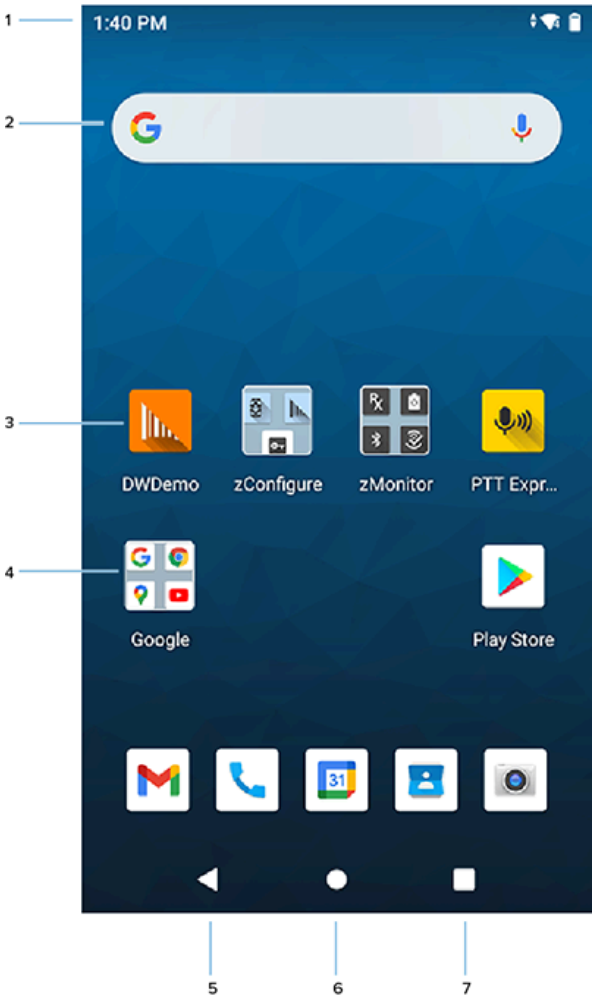

Figure 4 Android 13 Home Screen

1	Status bar	Displays the time, status icons (right side), and notification icons (left side).
2	Widgets	Launches stand-alone apps that run on the Home screen.
3	Shortcut icons	Opens apps installed on the device.
4	Folder	Contains apps.
5	Back	Displays the previous screen.
6	Home	Displays the home screen.
7	Recent	Displays recently used applications.

Setting the Home Screen Rotation

By default, the Home screen rotation is disabled.

NOTE: Auto-rotate must be enabled in the Quick Access panel or in Settings before the Home Screen Rotation setting can be used.

1. Touch and hold anywhere on the Home screen until the options appear.
2. Touch **Home settings**.
3. Touch the **Allow Home screen rotation** switch.
4. Touch **Home**.
5. Rotate the device.

Status Bar

The Status bar displays the time, notification icons (left side), and status icons (right side).

If there are more notifications than can fit in the Status bar, a dot displays, indicating that more notifications exist. Swipe down from the Status bar to open the Notification panel and view all notifications and status.

Figure 5 Notifications and Status Icons

1	Notification icons
2	Status icons

Notification Icons

Notification icons indicate app events and messages.

Table 4 Notification Icons

Icon	Description
	The main battery is low.
	More notifications are available for viewing.
	Data is synching.
	Indicates an upcoming event. AOSP devices only.

Table 4 Notification Icons (Continued)

Icon	Description
	Indicates an upcoming event. GMS devices only.
	An Open Wi-Fi network is available. The device is not connected to it.
	Audio is playing.
	A problem with sign-in or sync has occurred.
	The device is uploading data.
	Animated: the device is downloading data. Static: the download is complete.
	The device is connected to or disconnected from a virtual private network (VPN).
	Preparing internal storage by checking it for errors.
	USB debugging is enabled on the device.
	A wired headset with a boom module is connected to the device.
	A wired headset without a boom module is connected to the device.
	PTT Express Voice client status. See PTT Express PTT Notification Icons for a complete list.
	The RxLogger app is running.
	A Bluetooth scanner is connected to the device.
	A ring scanner is connected to the device in HID mode.

Status Icons

Status icons display system information for the device.

Table 5 Status Icons

Icon	Description
	Alarm is active.
	Main battery is fully charged.
	Main battery is partially drained.
	Main battery charge is low.
	Main battery charge is very low.
	Main battery is charging.
	UPS battery is fully charged.
	All sounds, except media and alarms, are muted. Vibrate mode is active.
	Do Not Disturb mode active.
	Airplane Mode is active. All radios are turned off.
	Bluetooth is on.
	Connected to a Bluetooth device.
	Connected to an Ethernet network.
	Speakerphone enabled.

Managing Notifications

Notification icons report the arrival of new messages, calendar events, alarms, and ongoing events. When a notification occurs, an icon appears in the Status bar with a brief description.

Figure 6 Android 11 Notification Panel

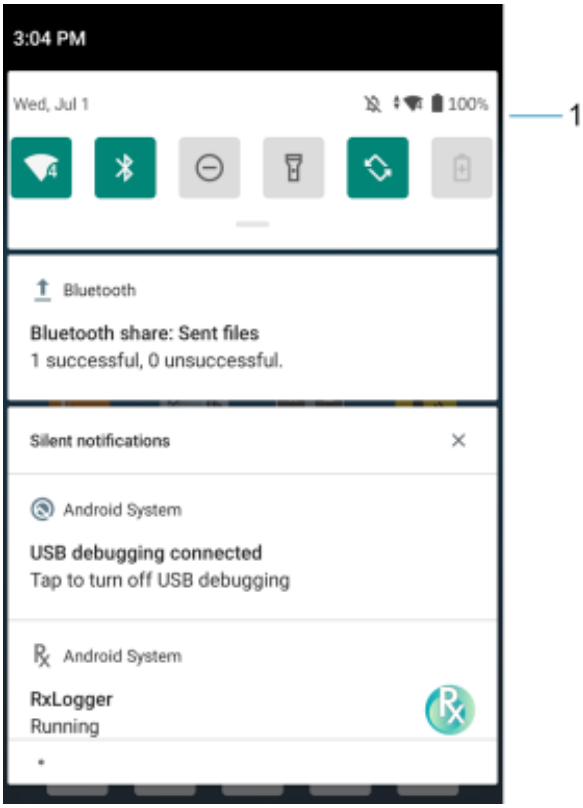

Figure 7 Android 13 Notification Panel

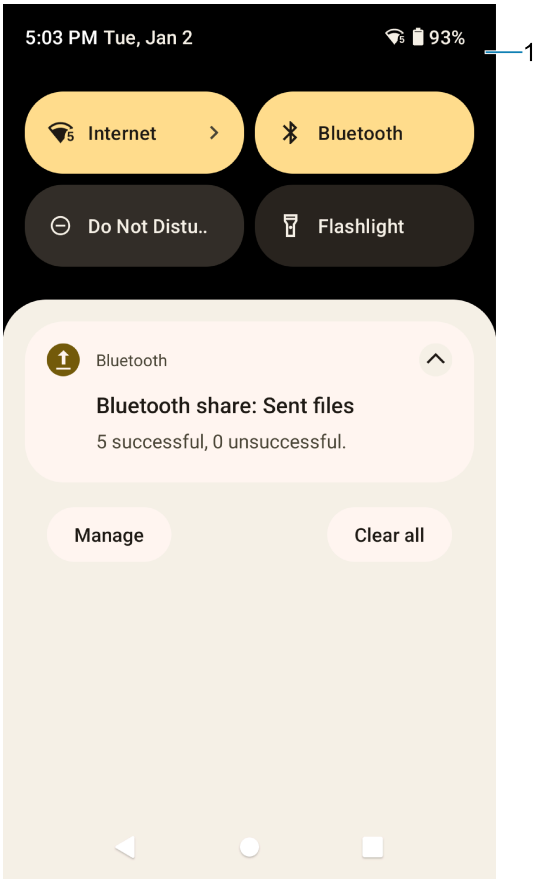

1	Quick settings bar

- To view a list of all notifications, open the Notification panel by dragging the Status bar down from the top of the screen.
- To respond to a notification, open the Notification panel and then touch a notification. The Notification panel closes and the corresponding app opens.
- To manage recent or frequently used notifications, open the Notification panel and then touch Manage notifications. Touch the toggle switch next to an app to turn off all notifications, or touch an app for more notification options.
- To clear all notifications, open the Notification panel and then touch CLEAR ALL. All event-based notifications are removed. Ongoing notifications remain in the list.
- To close the Notification panel, swipe the Notification panel up.

Opening the Quick Access Panel

Use the Quick Access panel to access frequently used settings (for example, Airplane mode).

NOTE: Not all icons are pictured. Icons may vary.

Figure 8 Android 11 Quick Access Panel

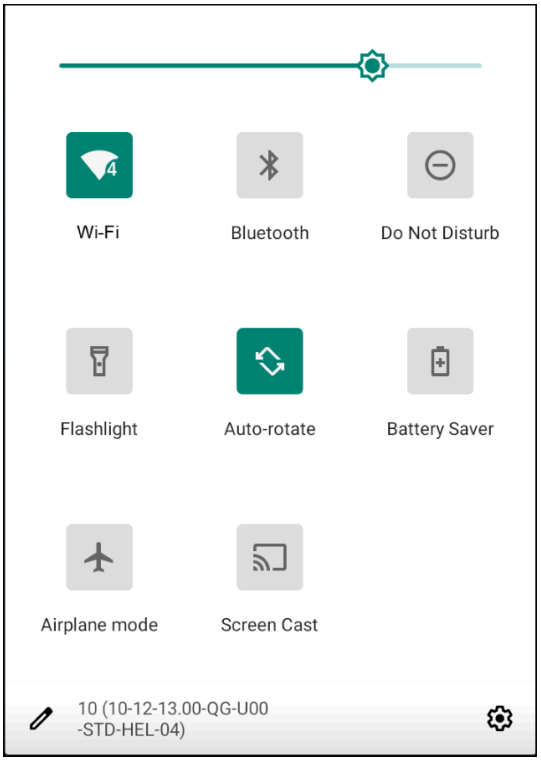

Figure 9 Android 13 Quick Access Panel

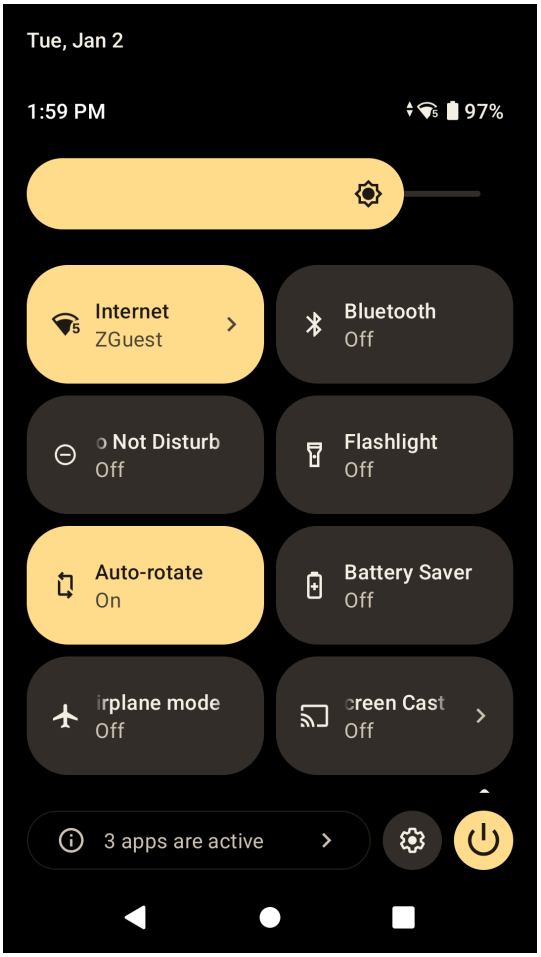

- If the device is locked, swipe down once.
- If the device is unlocked, swipe down once with two fingers, or twice with one finger.
- If the Notification panel is open, swipe down from the Quick Settings bar.

Quick Panel Access Icons

Quick Access panel icons indicate frequently used settings (for example, Airplane mode).

Table 6 Quick Access Panel Icons

Icon	Description
	Display brightness - Use the slider to decrease or increase the brightness of the screen. (A11 only)
	Display brightness - Use the slider to decrease or increase the brightness of the screen. (A13 only)

Table 6 Quick Access Panel Icons (Continued)

Icon	Description
	Internet/Wi-Fi network - Turn Wi-Fi on or off. To open Wi-Fi settings, touch the Wi-Fi network name.
	Bluetooth settings - Turn Bluetooth on or off. To open Bluetooth settings, touch Bluetooth.
	Battery saver - Turn Battery saver mode on or off. When Battery saver mode is on the performance of the device is reduced to preserve battery power (not applicable).
	Invert colors - Invert the display colors.
	Do not disturb - Control how and when to receive notifications.
	Airplane mode - Turn Airplane mode on or off. When Airplane mode is on the device does not connect to Wi-Fi or Bluetooth.
	Auto-rotate - Lock the device's orientation in portrait or landscape mode or set to automatically rotate.
	Flashlight - Turn the flashlight or camera flash on or off. When the flashlight is activated, it stays on unless it is turned off or the camera app is run.
	Night Light - Tint the screen amber to make it easier to look at the screen in dim light. Set Night Light to turn on automatically from sunset to sunrise, or at other times.
	Screen Record - Makes a video recording of everything that happens on the screen, with options to include audio and screen touches.
	Screen Cast - Share phone content on Chromecast or a television with Chromecast built-in. On the Cast screen, check the "enable wireless display" option, and then touch "cast screen" to display a list of devices. Touch a device in the list to begin casting.
	Dark Theme - Toggles dark theme on and off. Dark themes reduce the luminance emitted by the screen, while meeting minimum color contrast ratios. It helps improve visual ergonomics by reducing eye strain, adjusting brightness to current lighting conditions, and facilitating screen use in dark environments, while conserving battery power.
	Focus mode - Turn on to pause distracting apps. To open Focus mode settings, touch and hold.
	Bedtime mode - Turn grayscale on and off. Grayscale turns the screen black and white, reducing phone distractions and improving battery life.
	Nearby Share - Helps find and interact with services and devices close to the device.

Table 6 Quick Access Panel Icons (Continued)

Icon	Description
	NFC - Enable or disable NFC communication.
	Scan QR code - Opens the camera app for QR code reading. (A13 only)
	Calculator - Open the calculator app. (A13 only)

Editing the Quick Access Tiles

The first four setting tiles from the Quick Access panel become the Quick Access tiles on the Notification panel.

Figure 10 Notification Panel

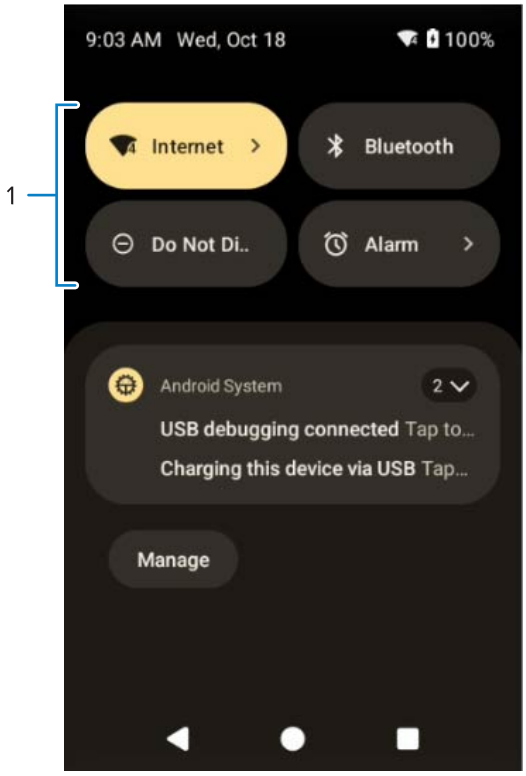

1	Quick access tiles

- Open the Quick Access panel and touch ✎ to edit, add, or remove settings tiles.

Battery Management

Observe the recommended battery optimization tips for the device.

- Set the screen to turn off after a short period of inactivity.
- Reduce screen brightness.
- Turn off all wireless radios when not in use.
- Turn off automatic syncing for Email, Calendar, Contacts, and other apps.
- Minimize the use of apps that keep the device from sleeping, for example, music and video apps.

NOTE: Before checking the battery charge level, remove the device from any AC power source (cradle or cable).

Low Battery Notification

When the battery charge level drops below the change level in the table below, the device displays a notice to connect the device to power. Charge the battery using one of the charging accessories.

Table 7 Low Battery Notification

Charge Level Drops Below	Action
18%	The user should charge the battery soon.
10%	The user must charge the battery.
4%	The device turns off. The user must charge the battery.

Turning Off the Radios

1. Swipe down from the Status bar to open the Quick Settings panel.
2. Touch Airplane mode. The airplane icon appears in the Status bar indicating that all the radios are off.

Interactive Sensor Technology

The device contains sensors that monitor movement, orientation and ambient light.

- Gyroscope - Measures angular rotational velocity to detect rotation of the device.
- Accelerometer - Measures the linear acceleration of movement to detect the orientation of the device.
- Digital Compass - The digital compass or magnetometer provides simple orientation in relation to the Earth's magnetic field. As a result, the device always knows which way is North so it can auto rotate digital maps depending on the physical orientation of the device.
- Light Sensor - Detects ambient light and adjusts the screen brightness.
- Pressure Sensor - Detects pressure on the touch screen.

In order to take advantage of these sensors, applications use API commands. Refer to the Google Android Sensor APIs for more information. For information on the Zebra Android EMDK, go to: techdocs.zebra.com.

Waking the Device

The device goes into Sleep mode when you press **Power** or after a period of inactivity (set in the Display settings window).

1. To wake the device from Sleep mode, press **Power** or the configured wake-up sources.

   The Lock screen displays.

2. Swipe the screen up to unlock.
   - If the screen option is set to Swipe, the Home screen displays.
   - If either the PIN or Password screen unlock feature is enabled, a prompt displays. Enter the PIN or password to unlock the device and move to the Home screen.
   - If the Pattern screen unlock feature is enabled, the Pattern screen displays. Swipe the correct pattern between the dots to unlock the device and move to the Home screen.

NOTE: If you enter the PIN, password, or pattern incorrectly five times, you must wait 30 seconds before trying again.

- If you forget the PIN, password, or pattern, contact your system administrator.

USB Communication

Connect the device to a host computer to transfer files between the device and the host computer.

When connecting the device to a host computer, follow the host computer's instructions for connecting and disconnecting USB devices, to avoid damaging or corrupting files. For information on USB communication accessories available for this device, see Accessories.

Transferring Files

Use the Transfer files option to copy files between the device and the host computer.

1. Connect the device to a host computer using a USB accessory.
2. On the device, pull down the Notification panel and touch **Charging this device via USB**.

   By default, **No data transfer** is selected.

3. Touch **File Transfer**.

NOTE: After changing the setting to **File Transfer**, and then disconnecting the USB cable, the setting reverts back to **No data transfer**. If the USB cable is reconnected, select **File Transfer** again.

4. On the host computer, open **File Explorer**.
5. Locate the **device** as a portable device.
6. Open the SD card or the Internal storage folder.
7. Copy files to and from the device or delete files as required.

Transferring Photos

Use PTP to copy photos from the device to the host computer.

1. Connect the device to a host computer using a USB accessory.
2. On the device, pull down the Notification panel and touch **Charging this device via USB**.
3. Touch **Transfer photos PTP**.
4. On the host computer, open a file explorer application.
5. Open the SD card or the Internal storage folder.
6. Copy or delete photos as required.

Disconnecting from the Host Computer

NOTE: Carefully follow the host computer's instructions to unmount the microSD card and disconnect USB devices correctly to avoid losing information.

1. On the host computer, unmount the device.
2. Remove the device from the USB accessory.

Settings

This section describes the settings on the device.

Accessing Settings

There are multiple ways to access settings on a device.

- Swipe down with two fingers from the top of the Home screen to open the Quick Access panel and touch ⚙.
- Double-swipe down from the top of the Home screen to open the Quick Access panel and touch ⚙.
- Swipe up from the bottom of the Home screen to open APPS and touch **Settings**.

Display Settings

Use Display settings to change the screen brightness, enable night light, change the background image, enable screen rotation, set screen timeout, and change font size.

Setting the Screen Brightness Automatically

Automatically adjust the screen brightness using the built-in light sensor.

1. Go to **Settings**.
2. Touch **Display**.
3. If disabled, touch **Adaptive brightness** to automatically adjust the brightness.

   By default, **Adaptive brightness** is enabled. Toggle the switch to disable.

Setting the Screen Brightness Manually

Manually set the screen brightness using the touchscreen.

1. Swipe down with two fingers from the Status bar to open the Quick Access panel.
2. Slide ⚙ left or right to adjust the screen brightness level.

Setting Night Light

The Night Light setting tints the screen amber, making the screen easier to look at in low light.

1. Go to **Settings**.
2. Touch **Display**.
3. Touch **Night Light**.
4. Touch **Schedule**.
5. Select one of the schedule values:
   - None (default)
   - Turns on at custom time
   - Turns on from sunset to sunrise.
6. By default, **Night Light** is disabled.
   - On Android 11, touch **TURN ON NOW** to enable.
   - On Android 13, touch **Use Night Light** to enable.
7. Adjust the tint using the **Intensity** slider.

Setting Screen Rotation

By default, screen rotation is enabled.

NOTE: To change the Home screen rotation, see Setting Home Screen Rotation

1. Go to **Settings**.
2. On Android 11, touch **Display** > **Advanced**.
3. On Android 13, touch **Display**.
4. Touch **Auto-rotate screen**.
5. Touch **Home**.

Setting Screen Timeout

The screen turns off and goes into Suspend mode after the selected period of inactivity.

1. Go to **Settings**.
2. On Android 11, touch **Display** > **Advanced** > **Screen timeout**.
3. On Android 13, touch **Display** > **Screen timeout**.

4. Select one of the sleep values:
   - **15 seconds**
   - **30 seconds**
   - **1 minute** (default)
   - **2 minutes**
   - **5 minutes**
   - **10 minutes**
   - **30 minutes**
5. On Android 13, turn on the **Screen** attention switch to prevent your screen from turning off if you are looking at it.

Setting Lock Screen Notifications

The lock screen display setting wakes the screen when notifications are received.

1. Go to **Settings**.
2. On Android 11, touch **Display** > **Advanced**.
3. On Android 13, touch **Display**.
4. Touch **Lock screen**.
5. On Android 11, in the **When to show** section, enable or disable an option using the switch.
6. On Android 13, in the **What to show** and **When to show** section, enable or disable an option using the switch.

Setting Font Size

Set the size of the font in system apps.

1. Go to **Settings**.
2. On Android 11, touch **Display** > **Advanced** > **Font size**.
3. On Android 13, touch **Display** > **Display size and text**. Use the **Font size** + and - to vary the font size.
4. Touch **Home**.

Setting Display Size

By default, the display size is set to Default.

1. Go to **Settings**.
2. On Android 11, touch **Display** > **Advanced** > **Display size**.
3. On Android 13, touch **Display** > **Display size and text**. Use the **Display size** + and - to vary the text size.
4. Touch **Home**.

Notification LED Brightness Level

1. Go to **Settings**.

2. On Android 11, touch **Display** > **Advanced**.
3. On Android 13, touch **Display**.
4. Touch **Notification LED Brightness Level**.
5. Use the slider to set the brightness value (default: 15).

Setting Touch Panel Mode

The device display is able to detect touches using a finger, a conductive-tip stylus, or a gloved finger.

NOTE: A glove can be made of medical latex, leather, cotton, or wool. For optimal performance, use a Zebra-certified stylus.

1. Go to **Settings**.
2. On Android 11, touch **Display** > **Advanced**.
3. On Android 13, touch **Display**.
4. Touch **Touch Panel UI**.
5. Select:
   - **Stylus and Finger (Screen Protector OFF)** to use a finger or a stylus on the screen without a screen protector.
   - **Glove and Finger (Screen Protector OFF)** to use a finger or a gloved finger on the screen without a screen protector.
   - **Stylus and Finger (Screen Protector ON)** to use a finger or a stylus on the screen with a screen protector.
   - **Glove and Finger (Screen Protector ON)** to use a finger or a gloved finger on the screen with a screen protector.
   - **Finger Only** to use a finger on the screen (default).
6. Touch **Home**.

Setting Date and Time

You are only required to set the time zone or set the date and time if the wireless LAN does not support Network Time Protocol (NTP) or when not connected to a cellular/wireless network.

1. Go to **Settings**.
2. Touch **System** > **Date & time**.
3. On Android 11, touch **Use network-provided time** to disable automatic date and time synchronization.
4. On Android 13, touch **Set time automatically** to disable automatic date and time synchronization.
5. On Android 11, touch **Use network-provided time zone** to disable automatic time zone synchronization.
6. On Android 13, touch **Set time zone automatically** to disable automatic time zone synchronization.
7. Touch **Date** to select the date in the calendar.
8. Touch **OK**.

9. Touch **Time**.
   a) Touch the circle, drag to the current hour, and then release.
   b) Touch the circle, drag to the current minute, and then release.
   c) Touch **AM** or **PM**.
10. Touch **Time zone** to select the current time zone from the list.
11. Touch **Update Interval** to select an interval to synchronize the system time from the network.
12. In **TIME FORMAT**, choose either **Use locale default** or **Use 24-hour format**.
13. Touch **Home**.

General Sound Setting

Press the volume buttons on the device to display on-screen volume controls.

1. Go to **Settings**.
2. On Android 11, touch **Sound**.
3. On Android 13, touch **Sounds & Vibrations**.
4. Touch an option to set sounds.

Sound Options

- **Media volume** - Controls the music, games, and media volume.
- **Call volume** - Controls the volume during a call.
- **Ring & notification volume** - Controls the ringtone and notification volume. (Android 11 only)
- **Alarm volume** - Controls the alarm clock volume.
- **Notification volume** - Controls notification volume. (Android 13 only)
- **Vibrate for calls** - Switch on or off.
- **Do Not Disturb** - Mutes some or all sounds and vibrations.
- **Media** - Shows the media player in Quick Settings while sound is playing, allowing quick access.
- **Vibration & haptics** - Enable or disable vibration and/or haptic settings (Android 13 only).
- **Shortcut to prevent ringing** - Turn on the switch to make the device vibrate when a call is received (default – disabled).
- **Phone ringtone** - Select a sound to play when the phone rings.
- **Live Caption** - Detects speech on your device and automatically generates captions. (Android 13 only)
- **Default notification sound** - Select a sound to play for all system notifications.
- **Default alarm sound** - Select a sound to play for alarms.

- **Other sounds and vibrations:**
  - **Dial pad tones** - Play a sound when pressing keys on dial pad (default - disabled). (Android 11 only)
  - **Screen locking sounds** - Play a sound when locking and unlocking the screen (default – enabled).
  - **Charging sounds and vibration** - Play a sound and vibrate when power is applied to the device (default - enabled).
  - **Touch sounds** - Play a sound when making screen selections (default – enabled).
  - **Touch vibration** - Vibrate the device when making screen selections (default – enabled) (Android 11 only).
  - **Always show icon when in vibrate mode** - Turn on the switch to show the icon when in vibrate mode (default - disabled) (Android 13 only).

Zebra Volume Controls

In addition to the default sound settings, Zebra Volume Controls display when the volume buttons are pressed.

Zebra Volume Controls are configured using Audio Volume UI Manager (AudioVolUIMgr). Administrators can use AudioVolUIMgr to add, delete and replace Audio Profiles, select an Audio Profile to use the device, and modify the default Audio Profile. For information on how to configure Zebra Volume Controls using AudioVolUIMgr, refer to techdocs.zebra.com.

Setting Wake-Up Sources

By default, the device wakes from Sleep mode when the user presses **Power**. The device can be configured to wake when the user presses **PTT** or **Scan** on the left side of the device handle.

1. Go to **Settings**.
2. Touch **Wake-Up Sources**.
   - **LEFT_TRIGGER_2** - PTT button.
   - **REAR_BUTTON** - Programmable button on the back of the device.
   - **RIGHT_TRIGGER_1** - Right scan button.
   - **SCAN** - Left scan button.
3. Touch a checkbox.

   A check appears in the checkbox.
4. Touch the Home button.

Remapping a Button

Buttons on the device can be programmed to perform different functions or as shortcuts to installed apps. For a list of key names and descriptions, refer to: techdocs.zebra.com.

NOTE: It is not recommended to remap the scan button.

1. Go to **Settings**.

2. Touch **Key Programmer**. A list of programmable buttons displays.
3. Select the button to remap.
4. Touch the **BUTTON REMAPPING**, the **SHORTCUT**, or the **TRIGGER** tabs to list the available functions, applications, and triggers.
5. Touch a function or application shortcut to map to the button.

NOTE: If you select an application shortcut, the application icon appears next to the button on the Key Programmer screen.

Remappable Keys

List of remappable device keys.

Figure 11 Key Positions

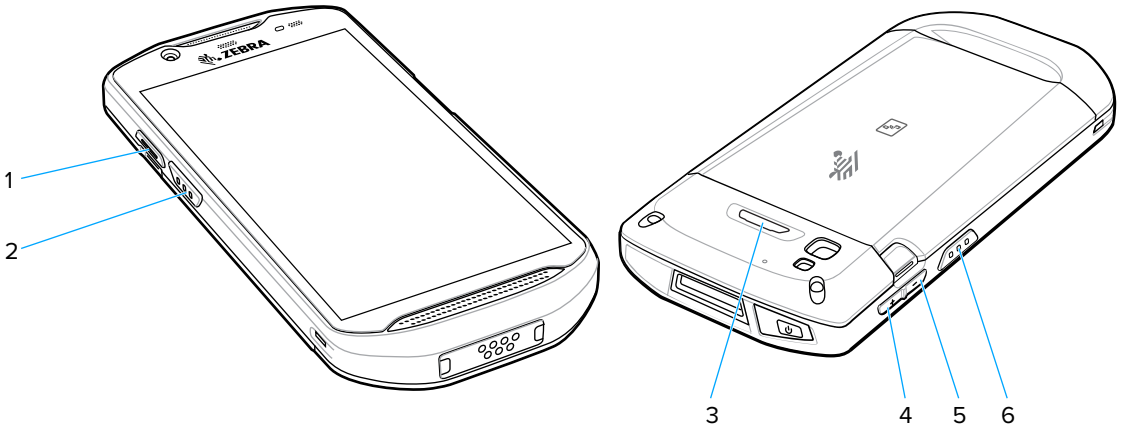

1	BUTTON_L2	PTT button
2	SCAN	Left scan button
3	BUTTON_L1	Rear button
4	VOLUME_UP	Volume up button
5	VOLUME_DOWN	Volume down button
6	BUTTON_R1	Right scan button

Keyboards

The device provides multiple keyboard options.

NOTE: By default, the Enterprise and Virtual Keyboards are disabled. The Enterprise Keyboard is available for download from the Zebra Support Site.

- Android Keyboard - AOSP devices only
- Gboard - GMS devices only
- Physical Keyboard

- Enterprise Keyboard - Not pre-installed on the device. Contact Zebra Support for more information.

Keyboard Configuration

This section describes configuring the device's keyboard.

Using the Android and Gboard Keyboards

Use the Android or Gboard keyboards to enter text in a text field.

- To configure the keyboard settings, touch and hold "," (comma) and then select **Android keyboard settings**.

Edit Text

Edit entered text and use menu commands to cut, copy, and paste text within or across apps. Some apps do not support editing some or all of the text they display; others may offer their own way to select text.

Entering Numbers, Symbols, and Special Characters

1. Enter numbers and symbols.
   - Touch and hold one of the top-row keys until a menu appears then select a number or special character.
   - Touch the Shift key once for a single capital letter. Touch the Shift key twice to lock in uppercase. Touch the Shift key a third time to unlock Capslock.
   - Touch **?123** to switch to the numbers and symbols keyboard.
   - Touch the =\< key on the numbers and symbols keyboard to view additional symbols.
2. Enter special characters.
   - Touch and hold a number or symbol key to open a menu of additional symbols. A larger version of the key displays briefly over the keyboard.

Enterprise Keyboard

The Enterprise Keyboard contains multiple keyboard types.

NOTE: Only available with Mobility DNA Enterprise License.

- Numeric
- Alpha
- Special characters
- Data capture

Numeric Tab

The numeric keyboard is labeled **123**. The keys displayed vary on the app being used. For example, an arrow displays in **Contacts**, however **Done** displays in **Email** account setup.

Alpha Tab

The alpha keyboard is labeled using the language code. For English, the alpha keyboard is labeled **EN**.

Additional Character Tab

The additional characters keyboard is labeled **#*/**.

- Touch ☺ to enter emoji icons in a text message.
- Touch **ABC** to return to the Symbols keyboard.

Scan Tab

The Scan tab provides an easy data capture feature for scanning barcodes.

Language Usage

Use the **Language & input** settings to change the device's language, including words added to the dictionary.

Changing the Language Setting

1. Go to **Settings**.
2. Touch **System** > **Languages & input**.
3. Touch **Languages**.

   A list of available languages displays.
4. If the desired language is not listed, touch **Add a language** and select a language from the list.
5. Touch and hold ☰ to the right of the desired language, then drag it to the top of the list.

   The operating system text changes to the selected language.

Adding Words to the Dictionary

1. Go to **Settings**.
2. On Android 11, touch **System** > **Languages & input** > **Advanced** > **Personal dictionary**.
3. On Android 13, touch **System** > **Languages & input** > **Personal dictionary**.
4. If prompted, select the language where this word or phrase is stored.
5. Touch **+** to add a new word or phrase to the dictionary.
6. Enter the word or phrase.
7. In the **Shortcut** text box, enter a shortcut for the word or phrase.

Notifications

The user can configure notifications for the device and for specific apps. Device notifications settings allow the user to configure how notifications occur on the device. App notification settings allow the user to configure how notifications for a specific app occur.

On Android 11, to view device notification settings, touch **Settings** > **Apps & notifications** > **Notifications**. To view app notifications, touch **Settings** > **Apps & notifications** > **App info**, and then select an app.

On Android 13, touch **Settings** > **Notifications**. To view app notifications, touch **Settings** > **App** > **All Apps**, and then select an app.

Setting App Notifications

Configure the notifications settings for a specific app.

1. Go to **Settings**.
2. On Android 11, touch **Apps & notifications** > **SEE ALL XX APPS**. The App info screen displays.
3. On Android 13, touch **Apps** > **All Apps**.
4. Select an app.
5. Touch **Notifications**.

   Options vary depending on the app selected.
6. On Android 11, select an available option:

   Show notifications - Select to turn all notifications from this app on (default) or off. Touch a notification category to display additional options.

   - **Alerting** - Allow notifications from this app to make sound or vibrate the device.
     - **Pop on screen** - Allow notifications from this app to pop notifications on the screen.
   - **Silent** - Do not allow notifications from this app to make sound or vibrate.
     - **Minimize** - In the Notification panel, collapse notifications to one line.
   - **Advanced** - Touch for additional options.
     - **Sound** - Select a sound to play for notifications from this app.
     - **Vibrate** - Allow notifications from this app to vibrate the device.
     - **Blink light** - Allow notifications from this app the light the Notification LED blue.
     - **Show notification dot** - Allow notifications from this app to add a notification dot to the app icon.
     - **Override Do Not Disturb** - Allow these notifications to interrupt when Do Not Disturb is enabled.

   Advanced

   - **Allow notification dot** - Do not allow this app to add a notification dot to the app icon.
   - **Additional settings in the app** - Open the app settings.
7. On Android 13, touch the switch to turn on or off notifications for this app.
   - **Allow notification dot** - Do not allow this app to add a notification dot to the app icon.
   - **Additional settings in the app** - Open the app settings.

Viewing Notifications

1. Go to **Settings**.
2. On Android 11, touch **Apps & Notifications**.
3. On Android 13, touch **Notifications** > **App Settings**.
4. Scroll down to **Notifications** to view how many apps have notifications turned off.

Controlling Lock Screen Notifications

Control whether notifications can be seen when the device is locked.

1. Go to **Settings**.
2. On Android 11, touch **Apps & notifications** > **Notifications**.
3. On Android 13, touch **Notifications**
4. On Android 11, touch **Notifications on lockscreen** and select one of the following:
   - **Show alerting and silent notifications (default)**
   - **Show alerting notifications only**
   - **Don’t show notifications**.
5. On Android 13, touch **Notifications on lockscreen** and select one of the following:
   - **Show conversations, default, and silent (default)**
   - **Hide silent conversations and notifications**
   - **Don't show any notifications**

Enabling Blink Light

The Notification LED lights are blue when an app, such as email and VoIP, generates a programmable notification or to indicate when the device is connected to a Bluetooth device. By default, LED notifications are enabled.

1. Go to **Settings**.
2. On Android 11, touch **Apps & notifications** > **Notifications** > **Advanced**.
3. On Android 13, touch **Notifications**.
4. Touch **Blink light** to toggle the notification on or off.

Applications

The APPS screen displays icons for all installed apps. See Application Deployment for information on installing and uninstalling apps. For information on standard Android apps, go to the Google Play Apps store.

Installed Applications

All the Zebra specific and other applications that are installed on the device are described in this section.

Table 8 Apps

Item	Description
	Battery Manager - Displays battery information (including charge level, status, health, and wear level) and use to place the device in Battery Swap mode when replacing the battery.
	Bluetooth Pairing Utility – Use to pair a Zebra Bluetooth scanner with the device by scanning a barcode.
	DataWedge - Enables data capture using the imager.
	DisplayLink Presenter - Use to present the device screen onto a connected monitor.
	DWDemo - Provides a way to demonstrate the data capture features using the imager.
	License Manager - Use to manage software licenses on the device.
	PTT Express - Use to launch PTT Express client for VoIP communication. (Android 11 only)

Table 8 Apps (Continued)

Item	Description
	RxLogger - Use to diagnose device and app issues.
	StageNow - Allows the device to stage a device for initial use by initiating the deployment of settings, firmware, and software.
	VoD - The Video on Device basic app provides a how-to video for proper device cleaning. For Video on Device licensing information, contact learningservices@zebra.com.
	Wireless Analyzer - A diagnostic intelligent app. Use to diagnose the surrounding area and display network stats, such as coverage hole detection or AP in the vicinity. Refer to the Wireless Analyzer Administrator Guide for Android. Only available with Mobility DNA Enterprise License.
	Zebra Bluetooth Settings - Use to configure Bluetooth logging.
	Zebra Data Services - Use to enable or disable Zebra Data Services. Some options are set by the system administrator.
	Zebra Showcase - Provides a way to experience and learn about Zebra's new or existing capabilities. (Android 13 only)

Accessing Apps

Access all apps installed on the device using the APPS window.

1. On the Home screen, swipe up from the bottom of the screen.
2. Slide the **APPS** window up or down to view more app icons.
3. Touch an icon to open the app.

Switching Between Recent Apps

Use the Recent button to switch between recently used apps.

1. Touch Recent.

   A window appears on the screen with icons of recently used apps.
2. Slide the apps displayed up and down to view all recently used apps.
3. Swipe left or right to remove app from the list and force close the app.
4. Touch an icon to open an app or touch Back button to return to the current screen.

Battery Manager

The Battery Manager provides detailed information about the battery.

This section also provides battery swap procedures for supported devices.

Opening Battery Manager

- To open the Battery Manager app, swipe up from the bottom of the Home screen, and then touch .

Battery Manager Information Tab

The Battery Manager displays detailed information about battery charging, health, and status.

Table 9 Battery Icons

Battery Icon	Description
	Battery charge level is between 85% and 100%.
	Battery charge level is between 19% and 84%.
	Battery charge level is between 0% and 18%.

Section Title

- **Level** - The current battery charge level as a percentage. Displays -% when the level is unknown.
- **Wear** - The health of the battery in graphical form. When the wear level exceeds 80%, the bar color changes to red.
- **Health** - The health of the battery. If a critical error occurs, appears. Touch to view the error description.
  - **Decommission** - The battery is past its useful life and should be replaced. See system administrator.
  - **Good** - The battery is good.
  - **Charge error** - An error occurred while charging. See system administrator.
  - **Over Current** - An over-current condition occurred. See system administrator.
  - **Dead** - The battery has no charge. Replace the battery.
  - **Over Voltage** - An over-voltage condition occurred. See system administrator.
  - **Below Temperature** - The battery temperature is below the operating temperature. See system administrator.
  - **Failure Detected** - A failure has been detected in the battery. See system administrator.
  - **Unknown** - See system administrator.

- **Charge Status**
  - **Not charging** - The device is not connected to AC power.
  - **Not charging** - The device is not charging.
  - **Charging-AC** - The device is connected to AC power and charging or is fast charging via USB.
  - **Charging-USB** - The device is connected to a host computer with a USB cable and charging.
  - **Discharging** - The battery is discharging.
  - **Full** - The battery is fully charged.
  - **Unknown** - The battery status is unknown.
- **Time until Full** - The amount of time until the battery is fully charged.
- **Time since charging** - The amount of time since the device began charging.
- **Time until empty** - The amount of time until the battery is empty.
- **Advanced info** - Touch to view additional battery information.
- **Advanced info** - Touch to view additional battery information.
  - **Battery present status** - Indicates that the battery is present.
  - **Battery level** - The battery charge level as a percentage of scale.
  - **Battery scale** - The battery scale level used to determine battery level (100).
  - **Battery voltage** - The current battery voltage in millivolts.
  - **Battery temperature** - The current battery temperature in degrees Centigrade.
  - **Battery technology** - The type of battery.
  - **Battery current** - The average current into or out of the battery over the last second in mAh.
  - **Battery manufacture date** - The date of manufacture.
  - **Battery serial number** - The battery serial number. The number matches the serial number printed on the battery label.
  - **Battery part number** - The battery part number.
  - **Battery decommission status** - Indicates if the battery is past its life span.
    - **Battery Good** - The battery is in good health.
    - **Decommissioned Battery** - The battery is past its useful life and should be replaced.
  - **Base cumulative charge** - Cumulative charge using Zebra charging equipment only.
  - **Battery present capacity** - Maximum amount of charge that could be pulled from the battery under the present discharge conditions if the battery were fully charged.
  - **Battery health percentage** - With a range from 0 to 100, this is the ratio of “present_capacity” to “design_capacity” at a discharge rate of “design_capacity”.
  - **% decommission threshold** - The default % decommission threshold for a gifted battery as 80%.
  - **Battery present charge** - Amount of usable charge remaining in the battery at present under the current discharge conditions.
  - **Battery total cumulative charge** - The total accumulated charge in all chargers.
  - **Battery time since first use** - The time passed since the battery was placed in a Zebra terminal for the first time.

- **Battery error status** - The error status of the battery.
- **App version** - The application version number.

Battery Manager Swap Tab

Use to place the device in Battery Swap mode when replacing the battery. Follow the instructions on the screen. Touch **I understand. Proceed with swap** button.

NOTE: The Swap tab also appears when the user presses the Power button and selects Battery Swap.

Camera

This section provides information for taking photos and recording videos using the integrated digital cameras.

NOTE: The device saves photos and videos on the microSD card, if installed and the storage path is changed manually. By default, or if a microSD card is not installed, the device saves photos and videos on internal storage.

Taking Photos on Android 11

NOTE: See Photo Settings on page 62 for camera settings descriptions.

1. Swipe up from the bottom of the Home screen and touch **Camera**.

1	Scene mode
2	Filters
3	Camera switch
4	HDR
5	Settings
6	Camera mode
7	Shutter button
8	Gallery

2. If necessary, touch the Camera Mode icon and touch .
3. To switch between the rear camera and front camera (if available), touch .
4. Frame the subject on the screen.
5. To zoom in or out, press two fingers on the display and pinch or expand your fingers. The zoom controls appear on the screen.

6. Touch an area on the screen to focus. The focus circle appears. The two bars turn green when in focus.
7. Touch .

The camera takes a photo and a shutter sound plays.

The photo momentarily displays as a thumbnail in the lower-left corner.

Taking Photos on Android 13

This section describes how to use the photo feature on the Camera app.

NOTE: See Photo Settings on page 62 for camera settings descriptions.

1. Swipe up from the bottom of the Home screen and touch **Camera**.

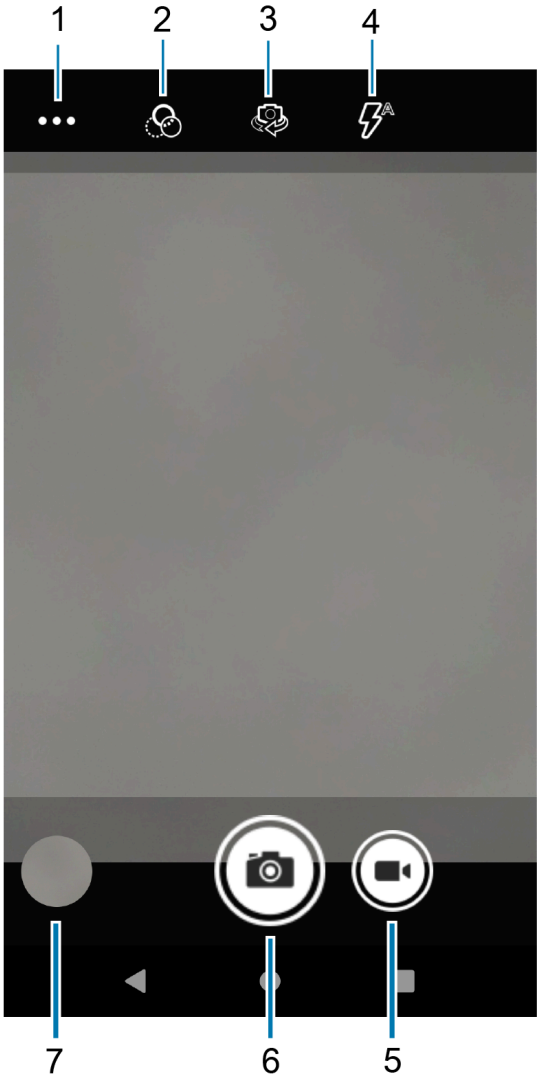

1	Camera Quick Settings
2	Filters

3	Rear/front cameras
4	Flash
5	Video mode
6	Shutter button
7	Gallery

2. If necessary, touch the Camera Mode icon and touch .
3. To switch between the rear camera and front camera, touch .
4. Frame the subject on the screen.
5. To zoom in or out, press two fingers on the display and pinch or expand your fingers. The zoom controls appear on the screen.
6. Touch an area on the screen to focus. The focus circle appears. The two bars turn green when in focus.
7. Touch .

The camera takes a photo and a shutter sound plays.

The photo momentarily displays as a thumbnail in the lower-left corner.

Taking a Panoramic Photo

Panorama mode creates a single wide image by panning slowly across a scene.

1. Swipe up from the bottom of the Home screen and touch **Camera**.

2. Touch the Camera Mode icon and touch .
3. Frame one side of the scene to capture.
4. Touch and slowly pan across the area to capture. A small white square appears inside the button indicating the capture is in progress.

   If you are panning too quickly, the message **Too fast** appears.
5. Touch to end the shot. The panorama appears immediately and a progress indicator displays while it saves the image.

Recording Videos on Android 11

1. Swipe up from the bottom of the Home screen and touch **Camera**.

2. Touch the camera mode menu and touch .

1	Color effect
2	Camera switch
3	Audio
4	Settings
5	Camera mode
6	Shutter button
7	Gallery

3. To switch between the rear camera and front camera (if available), touch .
4. Point the camera and frame the scene.
5. To zoom in or out, press two fingers on the display and pinch or expand fingers. The zoom controls appear on the screen.
6. Touch to start recording.

   The video time remaining appears in the top left of the screen.

7. Touch ⊙ to end the recording.

The video momentarily displays as a thumbnail in the lower left corner.

Recording Videos on Android 13

This section describes how to use the video feature on the Camera app.

NOTE: See Video Settings on page 66 for setting descriptions.

1. Swipe up from the bottom of the Home screen and touch **Camera**.
2. Touch **Video**.

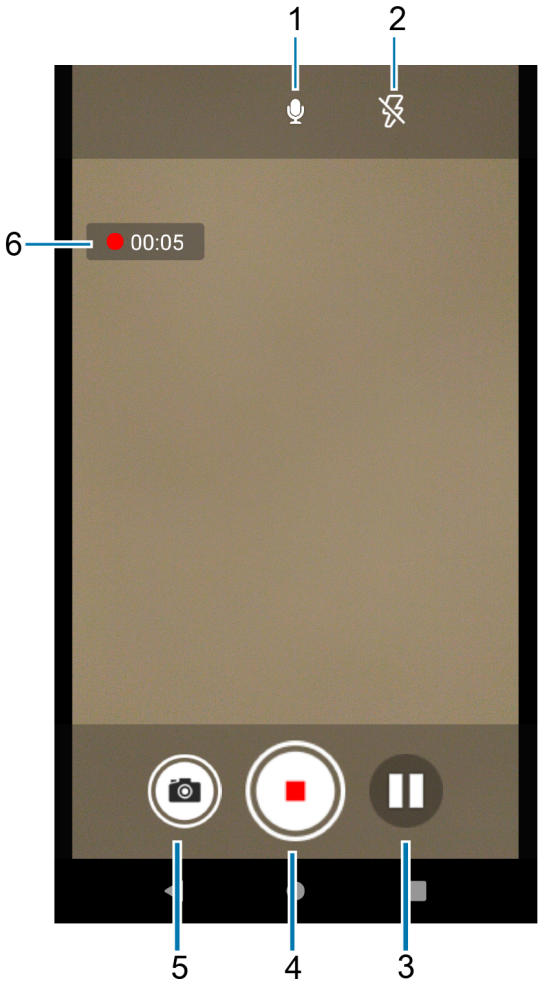

1	Audio
2	Flash
3	Pause recording
4	Shutter button (stop recording)
5	Take photo

6	Video timer

3. To switch between the rear camera and front camera (if available), touch .
4. Point the camera and frame the scene.
5. To zoom in or out, press two fingers on the display and pinch or expand fingers. The zoom controls appear on the screen.
6. Touch to start recording.

   The video time remaining appears in the top left of the screen.
7. Touch to end the recording.

The video momentarily displays as a thumbnail in the lower left corner.

Photo Settings

In Photo mode, photo settings appear on screen.

Touch to display the photo settings options.

Android 11 Rear Camera Photo Settings

- **Flash** - Select whether the camera relies on its light meter to decide whether a flash is necessary, or to turn it on or off for all shots.

Icon	Description
	Off - Disable flash.
	Auto - Adjust flash automatically depending upon light meter (default).
	On - Enable flash upon taking a photo.

- **Picture size** - The size (in pixels) of the photo to: 13M pixels (default), 8M pixels, 5M pixels, 3M pixels, HD 1080, 2M pixels, HD720, 1M pixels, WVGA, VGA, or QVGA.
- **Picture quality** - Set the picture quality setting to: Low, Standard (default) or High.
- **Countdown timer** - Select Off (default), 2 seconds, 5 seconds or 10 seconds.
- **Storage** – Set the location to store the photo to: Phone or SD Card.
- **Continuous Shot** - Select to take a series of photos quickly while holding the capture button. Off (default) or On.
- **Face Detection** - Set the camera to automatically adjust the focus for faces.
- **ISO** - Set camera sensitivity to light to: Auto (default), ISO Auto (HJR), ISO100, ISO200, ISO400, ISO800 or ISO1600.
- **Exposure** - Set the exposure settings to: +2, +1, 0(default), -1 or -2.

- **White balance** - Select how the camera adjusts colors in different kinds of light, to achieve the most natural-looking colors.

Icon	Description
	Incandescent - Adjust the white balance for incandescent lighting.
	Fluorescent - Adjust the white balance for florescent lighting.
	Auto - Adjust the white balance automatically (default).
	Daylight - Adjust the white balance for daylight.
	Cloudy - Adjust the white balance for a cloudy environment.

- **Redeye reduction** - Helps eliminate redeye effect. Options: Disabled (default), or Enable.
- **ZSL** - Set the camera to immediately take a picture when the button is pressed (default – enabled).
- **Shutter Sound** - Select to play a shutter sound when taking a photo. Options: Disable (default) or Enable.
- **Anti Banding** - Allows the camera to avoid problems caused by artificial light sources that are not constant. These sources cycle (flicker) fast enough to go unnoticed to the human eye, appearing continuous. The camera's eye (its sensor) can still see this flicker. Options: Auto (default), 60 Hz, 50 Hz, or Off.

Android 13 Rear Camera Photo Settings

- **Flash** - Select whether the camera relies on its light meter to decide whether a flash is necessary, or to turn it on or off for all shots.

Icon	Description
	Off - Disable flash.
	Auto - Adjust flash automatically depending upon light meter (default).
	On - Enable flash upon taking a photo.

- **Picture size** - The size (in pixels) of the photo to: 13M pixels (default), 8M pixels, 5M pixels, 3M pixels, HD 1080, 2M pixels, HD720, 1M pixels, WVGA, VGA, or QVGA.
- **Picture quality** - Set the picture quality setting to: Low, Standard (default) or High.
- **Countdown timer** - Select Off (default), 2 seconds, 5 seconds or 10 seconds.
- **Storage** – Set the location to store the photo to: Phone or SD Card.

- **Continuous Shot** - Select to take a series of photos quickly while holding the capture button. Off (default) or On.
- **Face Detection** - Set the camera to automatically adjust the focus for faces.
- **Exposure** - Set the exposure settings to: +2, +1, 0(default), -1 or -2.
- **White balance** - Select how the camera adjusts colors in different kinds of light, to achieve the most natural-looking colors.

Icon	Description
	Incandescent - Adjust the white balance for incandescent lighting.
	Fluorescent - Adjust the white balance for florescent lighting.
	Auto - Adjust the white balance automatically (default).
	Daylight - Adjust the white balance for daylight.
	Cloudy - Adjust the white balance for a cloudy environment.

- **Redeye reduction** - Helps eliminate redeye effect. Options: Disabled (default), or Enable.
- **Shutter Sound** - Select to play a shutter sound when taking a photo. Options: Disable (default) or Enable.
- **AutoFocus Animation** - Select to enable or disable the camera focus ring in the camera preview. Options: Disable (default) or Enable.
- **Picture Format** - All still images are saved in JPEG format. Off (default) or On.

Android 11 Front Camera Photo Settings

- **Selfie Flash** - Turns the screen white to help produce a little extra light in dimmer settings. Options: Off (default), or On.
- **Picture size** - Set the size (in pixels) of the photo to: 5M pixels (default), 3M pixels, HD1080, 2M pixels, HD720, 1M pixels, WVGA, VGA, or QVGA.
- **Picture quality** - Set the picture quality setting to: Low, Standard or High (default).
- **Countdown timer** - Set to: Off (default), 2 seconds, 5 seconds or 10 seconds.
- **Storage** – Set location to store the photo to: Phone or SD Card.
- **Continuous Shot** - Select to take a series of photos quickly while holding the capture button. Off (default) or On.
- **Face Detection** - Select to turn face detection Off (default) or On.
- **ISO** - Set how sensitive the camera is to light. Options: Auto (default), ISO Auto (HJR), ISO100, ISO200, ISO400, ISO800 or ISO1600.
- **Exposure** - Touch to adjust the exposure settings. Options: +2, +1, 0 (default), -1 or -2.

- **White balance** - Select how the camera adjusts colors in different kinds of light, to achieve the most natural-looking colors.

Icon	Description
	Incandescent - Adjust the white balance for incandescent lighting.
	Fluorescent - Adjust the white balance for fluorescent lighting.
	Auto - Adjust the white balance automatically (default).
	Daylight - Adjust the white balance for daylight.
	Cloudy - Adjust the white balance for a cloudy environment.

- **Redeye reduction** - Helps eliminate redeye effect. Options: Disabled (default), or Enable.
- **ZSL** - Set the camera to immediately take a picture when the button is pressed (default – enabled)
- **Selfie Mirror** - Select to save a mirror image of the photo. Options: Disable (default), or Enable.
- **Shutter Sound** - Select to play a shutter sound when taking a photo. Options: Disable (default) or Enable.
- **Anti Banding** - Allows the camera to avoid problems caused by artificial light sources that are not constant. These sources cycle (flicker) fast enough to go unnoticed to the human eye, appearing continuous. The camera's eye (its sensor) can still see this flicker. Options: Auto (default), 60 Hz, 50 Hz, or Off.

Android 13 Front Camera Photo Settings

- **Selfie Flash** - Turns the screen white to help produce a little extra light in dimmer settings. Options: Off (default), or On.
- **Picture size** - Set the size (in pixels) of the photo to: 5M pixels (default), 3M pixels, HD1080, 2M pixels, HD720, 1M pixels, WVGA, VGA, or QVGA.
- **Picture quality** - Set the picture quality setting to: Low, Standard or High (default).
- **Countdown timer** - Set to: Off (default), 2 seconds, 5 seconds or 10 seconds.
- **Storage** – Set location to store the photo to: Phone or SD Card.
- **Continuous Shot** - Select to take a series of photos quickly while holding the capture button. Off (default) or On.
- **Face Detection** - Select to turn face detection Off (default) or On.
- **Exposure** - Touch to adjust the exposure settings. Options: +2, +1, 0 (default), -1 or -2.

- **White balance** - Select how the camera adjusts colors in different kinds of light, to achieve the most natural-looking colors.

Icon	Description
	Incandescent - Adjust the white balance for incandescent lighting.
	Fluorescent - Adjust the white balance for fluorescent lighting.
	Auto - Adjust the white balance automatically (default).
	Daylight - Adjust the white balance for daylight.
	Cloudy - Adjust the white balance for a cloudy environment.

- **Selfie Mirror** - Select to save a mirror image of the photo. Options: Disable (default), or Enable.
- **Shutter Sound** - Select to play a shutter sound when taking a photo. Options: Disable (default) or Enable.
- **AutoFocus Animation** - Select to enable or disable the camera focus ring in the camera preview. Options: Disable (default) or Enable.
- **Picture Format** - All still images are saved in JPEG format. Off (default) or On.

Video Settings

In Video mode, video settings appear on screen. Touch to display the video settings options.

Android 11 Rear Camera Video Settings

- **Flash** - Select whether Rear-facing Camera relies on its light meter to decide whether a flash is necessary, or to turn it on or off for all shots.

Icon	Description
	Off - Disable flash.
	On - Enable flash upon taking a photo.

- **Video quality** - Set video quality to: 4k DCI, 4k UHD, HD 1080p (default), HD 720p, SD 480p, VGA, CIF, or QVGA.
- **Video duration** - Set to: 30 seconds (MMS), 10 minutes, or 30 minutes (default), or no limit.
- **Storage** – Set the location to store the photo to: Phone (default) or SD Card.

- **White balance**- Select how the camera adjusts colors in different kinds of light, to achieve the most natural-looking colors.

Icon	Description
	Incandescent - Adjust the white balance for incandescent lighting.
	Fluorescent - Adjust the white balance for florescent lighting.
	Auto - Adjust the white balance automatically (default).
	Daylight - Adjust the white balance for daylight.
	Cloudy - Adjust the white balance for a cloudy environment.

- **Image Stabilization** - Set to reduce blurry videos due to device movement. Options: On or Off (default).

Android 13 Rear Camera Video Settings

- **Flash** - Select whether Rear-facing Camera relies on its light meter to decide whether a flash is necessary, or to turn it on or off for all shots.

Icon	Description
	Off - Disable flash.
	On - Enable flash upon taking a photo.

- **Video quality** - Set video quality to: 4k DCI, 4k UHD, HD 1080p (default), HD 720p, SD 480p, VGA, CIF, or QVGA.
- **Video duration** - Set to: 30 seconds (MMS), 10 minutes, or 30 minutes (default), or no limit.
- **Storage** – Set the location to store the photo to: Phone (default) or SD Card.
- **Image Stabilization** - Set to reduce blurry videos due to device movement. Options: On or Off (default).
- **Noise Reduction** - Off (default), Fast, or High Quality.
- **Video Encoder** - Enable to save video recording using a high-efficiency video encoder (H264) for a smaller file size.
- **Audio Encoder** - Set the audio encoder to AMRNB or AAC (default).
- **Video Rotation** - Set the rotation of the video to: 0 (default), 90, 180, or 270.
- **Time Lapse** - Set the time lapse interval to: Off (default), or a time between 0.5 seconds and 24 hours.

Android 11 Front Camera Video Settings

- **Video quality** – Set video quality to: HD1080p (default), HD 720p, SD 480p, VGA, CIF, or QVGA.

- **Video duration** – Set to: 30 seconds (MMS), 10 minutes, 30 minutes (default), or no limit.
- **Storage** – Set the location to store the photo to: Phone (default) or SD Card.
- **White balance** - Select how the camera adjusts colors in different kinds of light, to achieve the most natural-looking colors.

Icon	Description
	Incandescent - Adjust the white balance for incandescent lighting.
	Fluorescent - Adjust the white balance for fluorescent lighting.
	Auto - Adjust the white balance automatically (default).
	Daylight - Adjust the white balance for daylight.
	Cloudy - Adjust the white balance for a cloudy environment.

- **Image Stabilization** - Set to reduce blurry videos due to device movement. Options: On or Off (default).

Android 13 Front Camera Video Settings

- **Video quality** – Set video quality to: HD1080p (default), HD 720p, SD 480p, VGA, CIF, or QVGA.
- **Video duration** – Set to: 30 seconds (MMS), 10 minutes, 30 minutes (default), or no limit.
- **Storage** – Set the location to store the photo to: Phone (default) or SD Card.
- **Image Stabilization** - Set to reduce blurry videos due to device movement. Options: On or Off (default).
- **Noise Reduction** - Off (default), Fast, or High Quality.
- **Video Encoder** - Enable to save video recording using a high-efficiency video encoder (H264) for a smaller file size.
- **Audio Encoder** - Set the audio encoder to AMRNB or AAC (default).
- **Video Rotation** - Set the rotation of the video to: 0 (default), 90, 180, or 270.
- **Time Lapse** - Set the time lapse interval to: Off (default), or a time between 0.5 seconds and 24 hours.

DWDemo

Use DataWedge Demonstration (DWDemo) to demonstrate data capture functionality. To configure DataWedge, refer to techdocs.zebra.com/datawedge/.

NOTE: DataWedge is disabled on the Home screen. To enable this feature, go to the **DataWedge** settings and enable **Barcode input** option.

DWDemo Icons

This table lists the icons available on the DWDemo app.

Table 10 DataWedge Demonstration Icons

Category	Icon	Description
Illumination		Imager illumination is on. Touch to turn illumination off.
Illumination		Imager illumination is off. Touch to turn illumination on.
Data Capture		The data capture function is through the internal imager.
Data Capture		The data capture function is through the rear camera.
Data Capture		A Bluetooth scanner is connected.
Data Capture		A Bluetooth scanner is not connected.
Scan Mode		Imager is in picklist mode. Touch to change to normal scan mode.
Scan Mode		Imager is in normal scan mode. Touch to change to picklist mode.
Menu		Opens a menu to view the application information or to set the application DataWedge profile.

Selecting a Scanner

See the Data Capture section for more information.

1. To select a scanner, touch ⋮ > **Settings** > **Scanner Selection**.
2. Press the programmable button or touch the yellow scan button to capture data.

   The data appears in the text field below the yellow button.

PTT Express Voice Client

PTT Express Voice Client enables Push-To-Talk (PTT) communication between disparate enterprise devices. Leveraging existing Wireless Local Area Network (WLAN) infrastructure, PTT Express delivers simple PTT communication without requiring a voice communication server.

NOTE: PTT Express is only pre-installed on Android 11.

NOTE: Requires a PTT Express License.

NOTE: Not available in all countries.

- **Group Call** - Press and hold **PTT (Talk)** to start communicating with other voice client users.
- **Private Response** - Double-press **PTT** to respond to the originator of the last broadcast or to make a Private Response.

PTT Express User Interface

Use the PTT Express interface for Push-To-Talk communication.

Figure 12 PTT Express User Interface

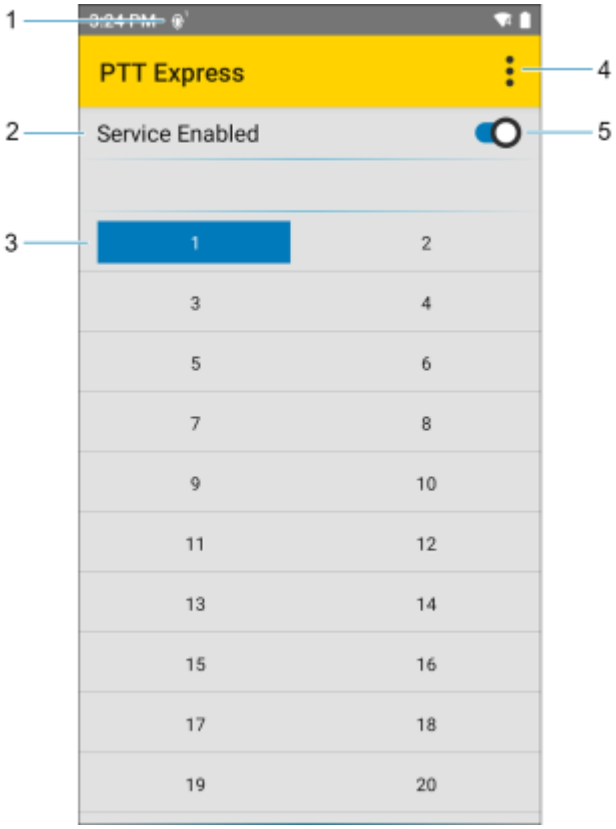

Number	Item	Description
1	Notification icon	Indicates the current state of the PTT Express client.
2	Service indication	Indicates the status of the PTT Express client. Options are: Service Enabled, Service Disabled or Service Unavailable.
3	Talk group	Lists all 32 Talk Groups available for PTT communication.
4	Settings	Opens the PTT Express Settings screen.
5	Enable/disable switch	Turns the PTT service on and off.

PTT Audible Indicators

The following tones provide helpful cues when using the voice client.

- **Talk Tone**: Double chirp. Plays when the Talk button is depressed. This is a prompt for you to start talking.
- **Access Tone**: Single beep. Plays when another user just finished a broadcast or response. You can now initiate a Group Broadcast or Private Response.
- **Busy Tone**: Continuous tone. Plays when the Talk button is depressed and another user is already communicating on the same talkgroup. Plays after the maximum allowed talk time is reached (60 seconds).
- **Network Tone**:
  - Three increasing pitch beeps. Plays when PTT Express acquires the WLAN connection and the service is enabled.
  - Three decreasing pitch beeps. Plays when PTT Express loses the WLAN connection or the service is disabled.

PTT Notification Icons

Notification icons indicate the current state of the PTT Express Voice client.

Table 11 PTT Express Icons

Status Icon	Description
	The PTT Express Voice client is disabled.
	The PTT Express Voice client is enabled but not connected to a WLAN.
	The PTT Express Voice client is enabled, connected to a WLAN, and listening on the Talk Group indicated by the number next to the icon.
	The PTT Express Voice client is enabled, connected to a WLAN, and communicating on the Talk Group indicated by the number next to the icon.
	The PTT Express Voice client is enabled, connected to a WLAN, and in a private response.
	The PTT Express Voice client is enabled and muted.
	The PTT Express Voice client is enabled but it is not able to communicate due to a VoIP telephony call in progress.

Enabling PTT Communication

1. Swipe up from the bottom of the Home screen and touch .
2. Slide the Enable/Disable Switch to the **ON** position. The button changes to **ON**.

Selecting a Talk Group

There are 32 Talk Groups that can be selected by PTT Express users. However, only one talk group can be enabled at a time on the device.

- Touch one of the 32 Talk Groups. The selected Talk Group is highlighted.

PTT Communication

This section describes the default PTT Express client configuration. Refer to the PTT Express V1.2 User Guide for detailed information on using the client.

PTT communication may be established as a Group Call.

PTT communication may be established as a Group Call. When PTT Express is enabled, the PTT button on the left side of the device is assigned for PTT communication. When the Wired Headset is used, Group Calls can also be initiated using the headset Talk button.

Figure 13 PTT Button

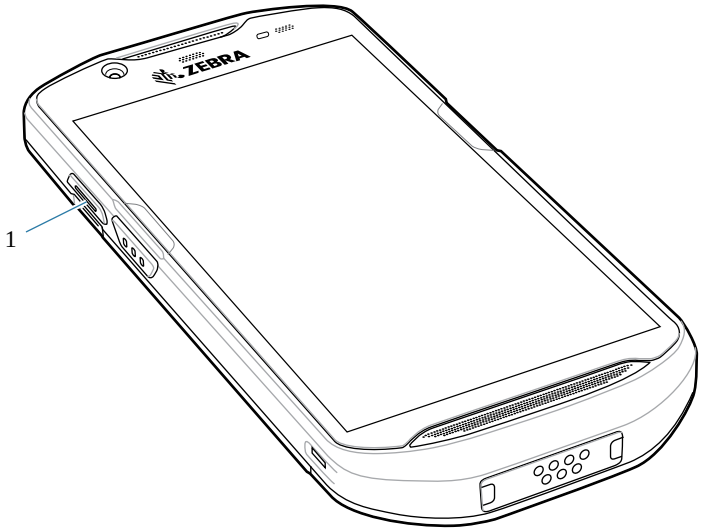

1	PTT button

Creating a Group Call

A group call allows the user to talk to a group of users.

NOTE: When using a wired headset, use only Zebra wired headsets with a PTT button.

1. Press and hold **PTT** (or **Talk** on the headset) and listen for the talk tone.

   If you hear a busy tone, release the button and wait a moment before making another attempt. Ensure that PTT Express and the WLAN are enabled.

2. Start talking after hearing the talk tone.

NOTE: Holding the button for more than 60 seconds (default) drops the call, allowing others to make Group Calls. Release the button when finished talking to allow others to make calls.

Responding with a Private Response

The Private Response can only be initiated once a Group Call has been established. The initial Private Response is made to the originator of the Group Call.

1. Wait for an access tone.
2. Within 10 seconds, double-press **PTT**, and listen for the talk tone.
3. If you hear a busy tone, release the button and wait a moment before making another attempt. Ensure that PTT Express and the WLAN are enabled.
4. Start talking after the talk tone plays.
5. Release the button when finished talking.

Disabling PTT Communication

1. Swipe up from the bottom of the Home screen and touch .
2. Slide the **Enable/Disable Switch** to the **OFF** position. The button changes to **OFF**.

RxLogger

RxLogger is a comprehensive diagnostic tool that provides application and system metrics, and diagnoses device and application issues.

RxLogger logs the following information: CPU load, memory load, memory snapshots, battery consumption, power states, wireless logging, cellular logging, TCP dumps, Bluetooth logging, GPS logging, logcat, FTP push/pull, ANR dumps, etc. All generated logs and files are saved onto flash storage on the device (internal or external).

RxLogger logs the following information: CPU load, memory load, memory snapshots, battery consumption, power states, wireless logging, TCP dumps, Bluetooth logging, logcat, FTP push/pull, ANR dumps, etc. All generated logs and files are saved onto flash storage on the device (internal or external).

RxLogger Configuration

RxLogger is built with an extensible plug-in architecture and comes packaged with a number of plug-ins already built-in. For information on configuring RxLogger, refer to techdocs.zebra.com/rxlogger/.

To open the configuration screen, from the RxLogger home screen touch **Settings**.

Configuration File

All RxLogger settings are stored in a file on the device, permitting remote configuration and mass deployment of setting files using an enterprise mobile management (EMM) system.

The config.json configuration file is located in the RxLogger\config folder. Copy the file from the device to a host computer using a USB connection. Edit the configuration file and then replace the JSON file on the

device. There is no need to stop and restart the RxLogger service because the file change is automatically detected.

The config.json configuration file is located on the microSD card in the RxLogger\config folder. Copy the file from the device to a host computer using a USB connection. Edit the configuration file and then replace the JSON file on the device. There is no need to stop and restart the RxLogger service because the file change is automatically detected.

IMPORTANT: The RxLogger configuration file is human-readable; however, it should not be edited by hand as doing so can lead to unpredictable behavior. Zebra recommends modifying RxLogger settings only through the RxLogger UI.

- File name: `config.json`
- Location: `/<internal_storage>/RxLogger`
- With external SD Card: `/storage/sdcard1/RxLogger`
- With no external SD Card: `/storage/sdcard0/RxLogger` When a new settings file is pushed to the device, RxLogger restarts all affected modules and applies the new settings immediately.

Copy the file from the device to a host computer using a USB connection. Edit the configuration file through the RxLogger UI and then replace the JSON file on the device. There is no need to stop and restart the RxLogger service because the file change is automatically detected.

Enabling Logging

1. Swipe the screen up and select .
2. Touch **Start**.

Disabling Logging

1. Swipe the screen up and select .
2. Touch **Stop**.

Extracting Log Files

1. Connect the device to a host computer using a USB connection.
2. Using a file explorer, navigate to the RxLogger folder.
3. Copy the file from the device to the host computer.
4. Disconnect the device from the host computer.

Backing Up Data

RxLogger Utility allows the user to make a zip file of the RxLogger folder in the device, which by default contains all the RxLogger logs stored in the device.

- To save the backup data, touch > **BackupNow**.

RxLogger Utility

RxLogger Utility is a data monitoring application for viewing logs in the device while RxLogger is running. Logs and RxLogger Utility features are accessed using Main Chat Head.

Initiating the Main Chat Head

1. Open **RxLogger**.
2. Touch ⋮ > **Toggle Chat Head**.

   The Main Chat Head icon appears on the screen.
3. Touch and drag the Main Chat Head icon to move it around the screen.

Removing the Main Chat Head

1. Touch and drag the icon.

   A circle with an X appears.
2. Move the icon over the circle and then release.

Viewing Logs

1. Touch the Main Chat Head icon.

   The RxLogger Utility screen appears.
2. Touch a log to open it.

   The user can open many logs with each displaying a new Sub Chat Head.
3. If necessary, scroll left or right to view additional Sub Chat Head icons.
4. Touch a Sub Chat Head to display the log contents.

Removing a Sub Chat Head Icon

- To remove a Sub Chat Head icon, press and hold the icon until it disappears.

Backing Up In Overlay View

RxLogger Utility allows the user to make a zip file of the RxLogger folder in the device, which by default contains all the RxLogger logs stored in the device.

The Backup icon is always available in Overlay View.

1. Touch 💾.

   The Backup dialog box appears.
2. Touch **Yes** to create the backup.

Data Capture

This section provides information for capturing barcode data using various scanning options.

The device supports data capture using:

- Integrated SE4710 imager
- Integrated camera
- RS507/RS507x Bluetooth Ring Scanner
- RS5100 Bluetooth Ring Scanner
- RS6000 Bluetooth Ring Scanner
- DS3678 Digital Scanner
- DS2278 Digital Scanner
- DS8178 Digital Scanner.
- LI3678 Linear Scanner.

Imaging

The device with an integrated 2D imager has the following features:

- Omnidirectional reading of a variety of barcode symbologies, including the most popular linear, postal, PDF417, Digimarc, and 2D matrix code types.
- The ability to capture and download images to a host for a variety of imaging applications.
- Advanced intuitive laser aiming cross-hair and dot aiming for easy point-and-shoot operation.

The imager uses imaging technology to take a picture of a barcode, stores the resulting image in memory, and executes state-of-the-art software decoding algorithms to extract the barcode data from the image.

Digital Camera

The device with an integrated camera based barcode scanning solution has the following features:

- Omnidirectional reading of a variety of barcode symbologies, including the most popular linear, postal, QR, PDF417, and 2D matrix code types.
- Cross-hair reticle for easy point-and-shoot operation.
- Picklist mode to decode a particular barcode from many in the field of view.

The solution uses the advanced camera technology to take a digital picture of a barcode, and executes state-of-the-art software decoding algorithms to extract the data from the image.

Operational Modes

The device with an integrated imager supports three modes of operation.

Activate each mode by pressing **Scan**.

- Decode mode — The device attempts to locate and decode enabled barcodes within its field of view. The imager remains in this mode as long as you hold the scan button, or until it decodes a barcode.

NOTE: To enable Picklist Mode, configure in DataWedge or set in an application using an API command.

- Picklist mode — Selectively decode a barcode when more than one barcode is in the device's field of view by moving the aiming crosshair or dot over the required barcode. Use this feature for pick lists containing multiple barcodes and manufacturing or transport labels containing more than one barcode type (either 1D or 2D).

NOTE: To enable MultiBarcode Mode, configure in DataWedge or set in an application using an API command.

- MultiBarcode Mode — In this mode, the device attempts to locate and decode a specific number of unique barcodes within its field of view. The device remains in this mode as long as the user holds the scan button, or until it decodes all the barcodes.
  - The device attempts to scan the programmed number of unique barcodes (from 2 through 100). This may be a fixed amount, meaning it scans X unique barcodes, or can be set as a range to scan a different number of unique barcodes each session.
  - If there are duplicate barcodes (same symbology type and data), only one of the duplicate barcodes is decoded and the remainder are ignored. If the label has two duplicate barcodes plus another two different barcodes, a maximum of three barcodes will be decoded from that label; one will be ignored as a duplicate.
  - Barcodes can be of multiple symbology types and still be acquired together. For example, if the specified quantity for a MultiBarcode Mode scan is four, two barcodes can be symbology type Code 128 and the other two can be symbology type Code 39.
  - If the specified number of unique barcodes is not initially in view of the device, the device will not decode any data until the device is moved to capture the additional barcode(s) or time out occurs. If the device field of view contains a number of barcodes greater than the specified quantity, the device randomly decodes barcode(s) until the specified number of unique barcodes is reached. For example, if the count is set to two and eight barcodes are in the field of view, the device decodes the first two unique barcodes it sees, returning the data in random order.
  - MultiBarcode Mode does not support concatenated barcodes.

Scanning Considerations

Typically, scanning is a simple matter of aim, scan, and decode, with a few quick trial efforts to master it.

However, consider the following to optimize scanning performance:

- Range — Scanners decode optimally over a particular working range — minimum and maximum distances from the barcode. This range varies according to barcode density and scanning device optics. Scan within range for quick and constant decodes; scanning too close or too far away prevents

decodes. Move the scanner closer and further away to find the right working range for the barcodes being scanned.

- Angle — Scanning angle is important for quick decodes. When the illumination/flash reflects directly back into the imager, the specular reflection can blind/saturate the imager. To avoid this, scan the barcode so that the beam does not bounce directly back. Do not scan at too sharp an angle; the scanner needs to collect scattered reflections from the scan to make a successful decode. Practice quickly shows what tolerances to work within.
- Hold the device farther away for larger symbols.
- Move the device closer for symbols with bars that are close together.

NOTE: Scanning procedures depend on the app and device configuration. An app may use different scanning procedures from the one listed above.

Scanning with Internal Imager

Use the internal imager to capture barcode data.

NOTE: To read a barcode, a scan-enabled app is required. The device contains the DataWedge app that allows the user to enable the scanner to decode barcode data and display the barcode content.

NOTE: Imager decoding usually occurs instantaneously. The device repeats the steps required to take a digital picture (image) of a poor or difficult barcode as long as the scan button remains pressed.

To scan with the internal imager:

1. Ensure that an application is open on the device and a text field is in focus (text cursor in text field).
2. Point the exit window of the device at a barcode.

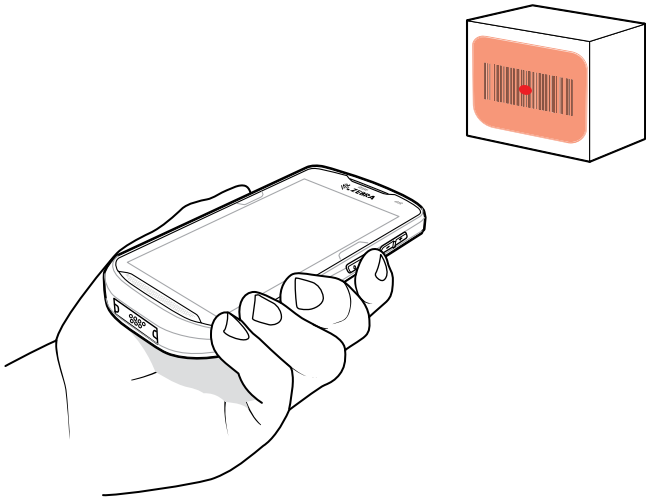

3. Press and hold the scan button.

   The red laser aiming pattern with red aiming dot turns on to asset in aiming.
4. Ensure the barcode is within the area formed by the aiming pattern. The aiming dot is used for increased visibility in bright lighting conditions.

Figure 14 Aiming Pattern

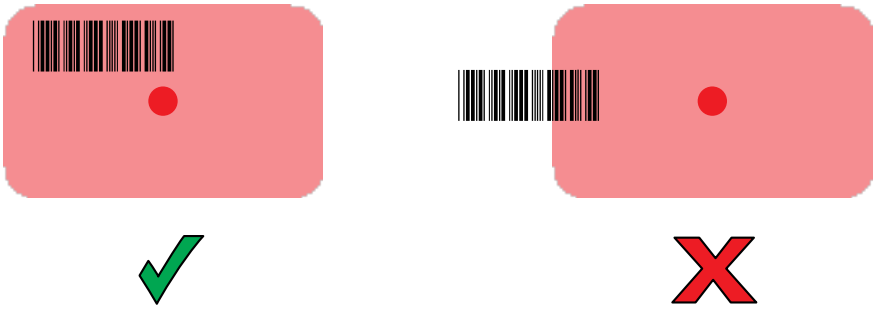

Figure 15 Pick List Mode with Multiple Barcodes

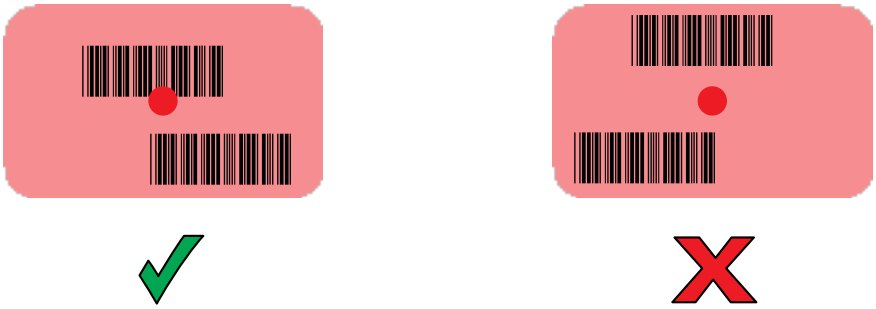

NOTE: When the device is in Pick List Mode, the device does not decode the barcode until the center of the crosshair touches the barcode.

The Data Capture LED light green and a beep sounds, by default, to indicate the barcode was decoded successfully.

5. Release the trigger.

The barcode content data appears in the text field.

Scanning with Internal Camera

Use the internal camera to capture barcode data.

NOTE: To read a barcode, a scan-enabled app is required. The device contains the DataWedge app that allows the user to enable the scanner to decode barcode data and display the barcode content.

NOTE: The integrated camera is intended for light-duty barcode scanning. For heavy-duty scanning, 100 or more scans per day, use the 2D imager.

When capturing barcode data in poor lighting, turn on Illumination mode in the DataWedge application.

To scan with the internal camera:

1. Point the camera window at a barcode.

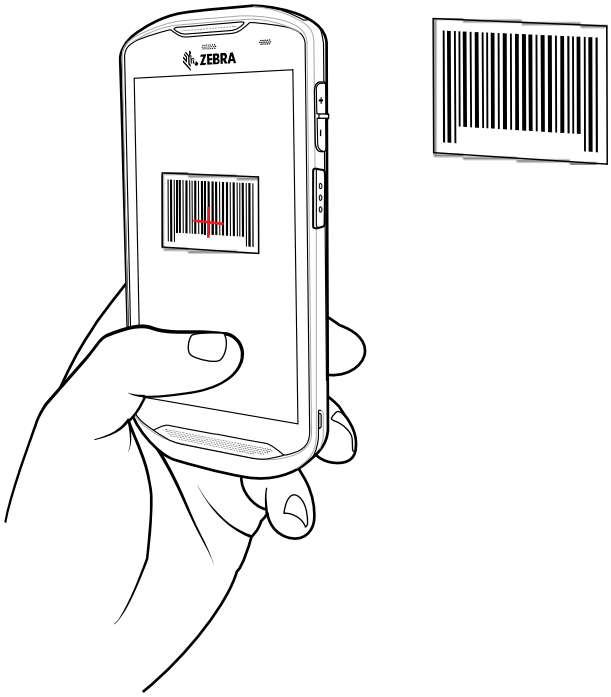

NOTE: When Picklist mode is enabled, move the device until the barcode is centered under the red target on the screen.

2. Press and hold the trigger. By default, a preview window appears on the screen.
3. Move the device until the barcode is visible on the screen.
4. The Decode LED lights green, a beep sounds and the device vibrates, by default, to indicate the barcode is decoded successfully.
5. The captured data appears in the text field.

Scanning with the RS507/RS507X Hands-Free Imager

Use the RS507/RS507X Hands-Free Imager to capture barcode data.

Figure 16 RS507/RS507X Hands-Free Imager

Refer to the RS507/RS507X Hands-free Imager Product Reference Guide for more information.

NOTE: To read a barcode, a scan-enabled app is required. The device contains the DataWedge app that allows the user to enable the scanner to decode barcode data and display the barcode content.

To scan with the RS507/RS507x:

1. Pair the RS507/RS507X with the device.
2. Ensure that an app is open on the device and a text field is in focus (text cursor in text field).
3. Point the RS507/RS507X at a barcode.

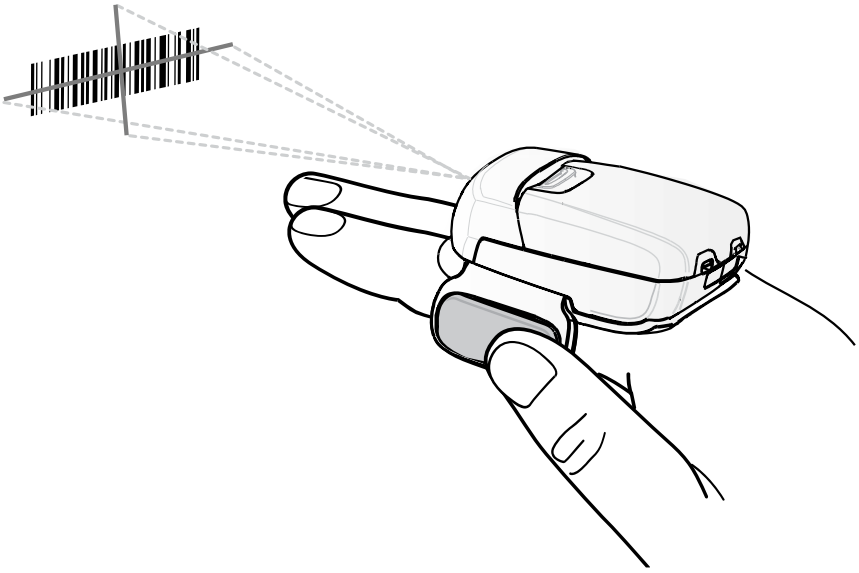

4. Press and hold the trigger.

   The red laser aiming pattern turns on to assist in aiming. Ensure the barcode is within the area formed by the cross-hairs in the aiming pattern. The aiming dot increases visibility in bright lighting conditions.

   Figure 17 RS507/RS507X Aiming Pattern

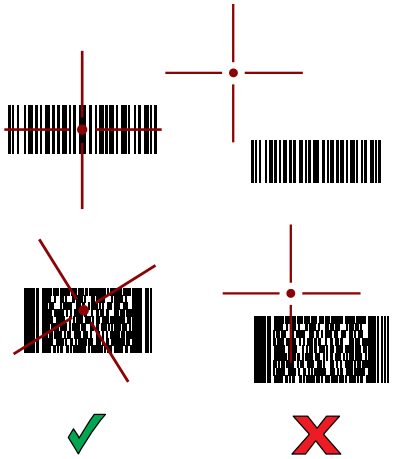

   When the RS507/RS507X is in Pick List mode, the RS507/RS507X does not decode the barcode until the center of the crosshair touches the barcode.

   Figure 18 RS507/RS507X Pick List Mode with Multiple Barcodes in Aiming Pattern

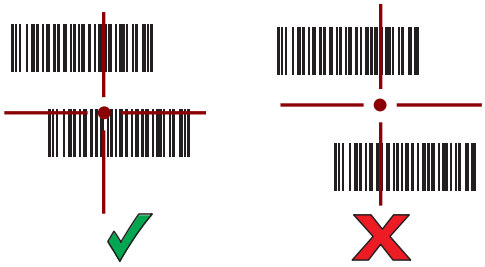

   The RS507/RS507X LEDs light green and a beep sounds to indicate the barcode was decoded successfully.

   The captured data appears in the text field.

Scanning with the RS6000 Bluetooth Ring Scanner

Use the RS6000 Bluetooth Ring Scanner to capture barcode data.

Figure 19 RS6000 Bluetooth Ring Scanner

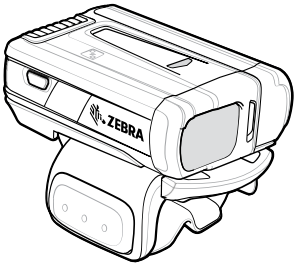

Refer to the RS6000 Bluetooth Ring Scanner Product Reference Guide for more information.

NOTE: To read a barcode, a scan-enabled app is required. The device contains the DataWedge app that allows the user to enable the scanner to decode barcode data and display the barcode content.

To scan with the RS6000:

1. Pair the RS6000 with the device.
2. Ensure that an app is open on the device and a text field is in focus (text cursor in text field).
3. Point the RS6000 at a barcode.

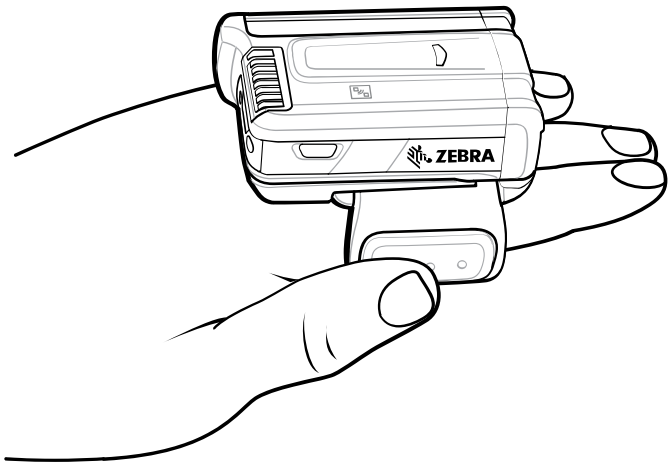

4. Press and hold the trigger.

   The red laser aiming pattern turns on to assist in aiming. Ensure the barcode is within the area formed by the cross-hairs in the aiming pattern. The aiming dot increases visibility in bright lighting conditions.

   Figure 20 RS6000 Aiming Pattern

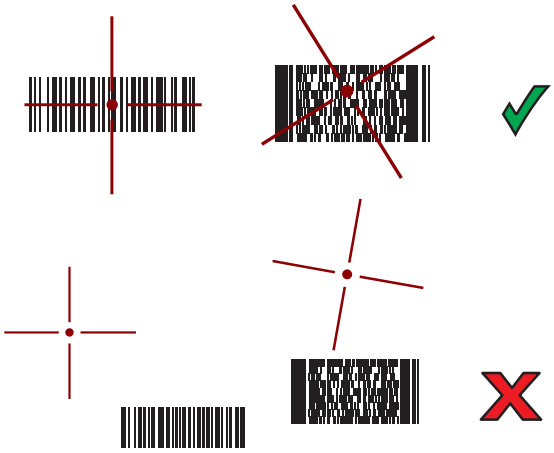

   When the RS6000 is in Pick List mode, the RS6000 does not decode the barcode until the center of the crosshair touches the barcode.

   Figure 21 RS6000 Pick List Mode with Multiple Barcodes in Aiming Pattern

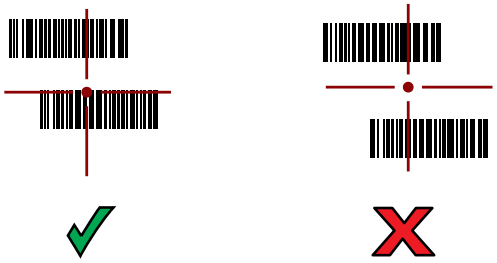

   The RS6000 LEDs light green and a beep sounds to indicate the barcode was decoded successfully.

   The captured data appears in the text field.

Scanning with the RS5100 Ring Scanner

Use the RS5100 Ring Scanner to capture barcode data.

Figure 22 RS5100 Ring Scanner

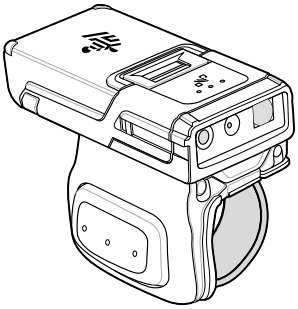

Refer to the RS5100 Ring Scanner Product Reference Guide for more information.

NOTE: To read a barcode, a scan-enabled app is required. The device contains the DataWedge app that allows the user to enable the scanner to decode barcode data and display the barcode content.

To scan with the RS5100:

1. Pair the RS5100 with the device.
2. Ensure that an app is open on the device and a text field is in focus (text cursor in text field).
3. Point the RS5100 at a barcode.

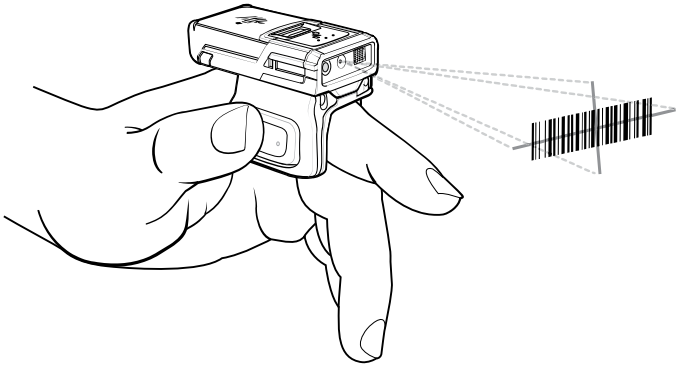

4. Press and hold the trigger.

   The red laser aiming pattern turns on to assist in aiming. Ensure the barcode is within the area formed by the cross-hairs in the aiming pattern. The aiming dot increases visibility in bright lighting conditions.

   Figure 23 RS5100 Aiming Pattern

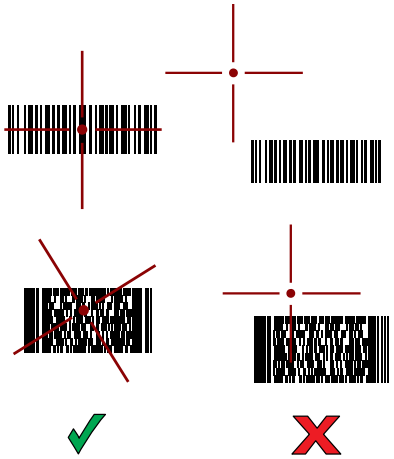

   When the RS5100 is in Pick List mode, the RS5100 does not decode the barcode until the center of the crosshair touches the barcode.

   Figure 24 RS5100 Pick List Mode with Multiple Barcodes in Aiming Pattern

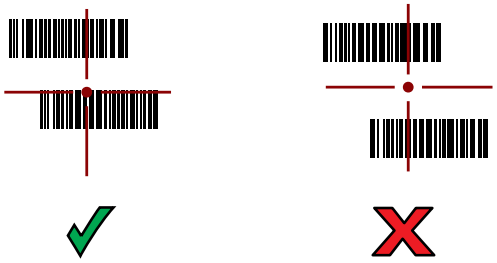

   The RS5100 LEDs light green and a beep sounds to indicate the barcode was decoded successfully.

   The captured data appears in the text field.

Scanning with the DS3678 Bluetooth Scanner

Use the DS3678 Bluetooth Scanner to capture barcode data.

Figure 25 DS3678 Digital Scanner

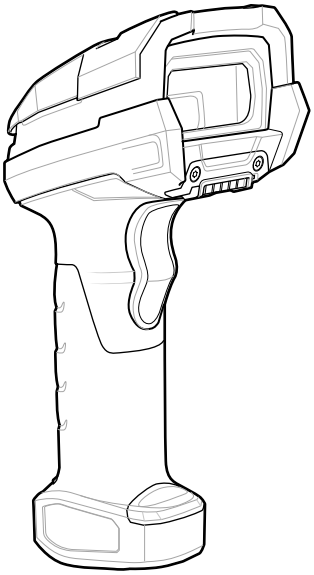

Refer to the DS3678 Product Reference Guide for more information.

NOTE: To read a barcode, a scan-enabled app is required. The device contains the DataWedge app that allows the user to enable the scanner to decode barcode data and display the barcode content.

To scan with the DS3678 scanner:

1. Pair the scanner with the device. See Pairing Bluetooth Scanners for more information.
2. Ensure that an app is open on the device and a text field is in focus (text cursor in text field).

3. Point the scanner at a barcode.

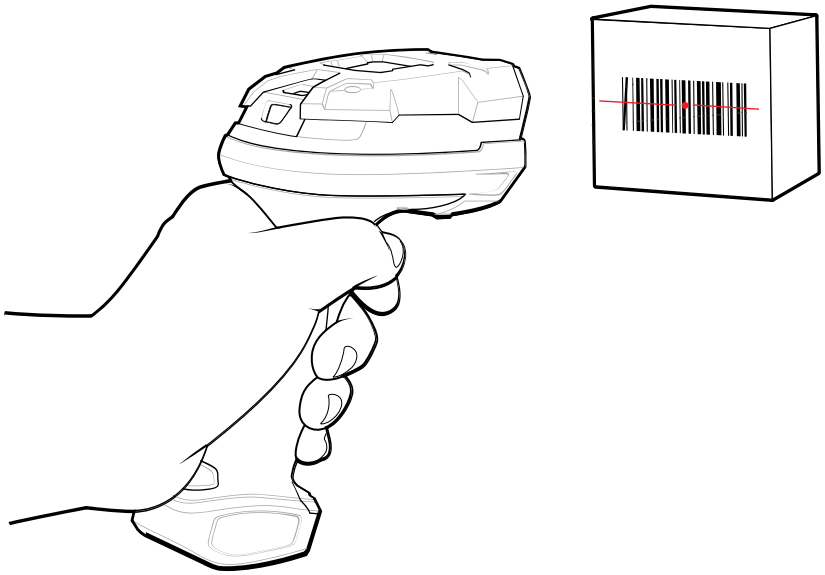

4. Press and hold the trigger.

   Ensure the barcode is within the area formed by the aiming pattern. The aiming dot increases visibility in bright lighting conditions.

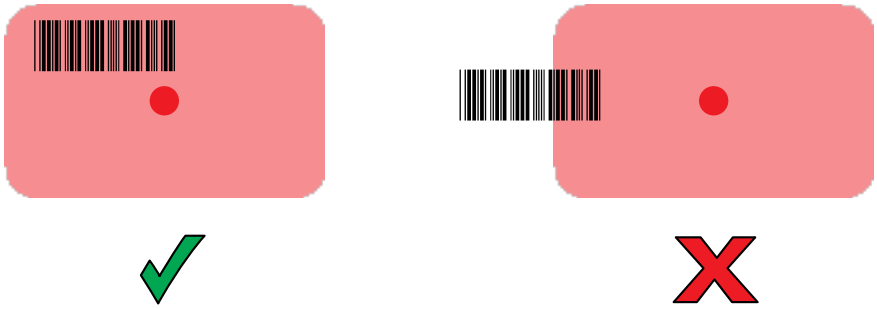

   The captured data appears in the text field.

Scanning with the LI3678 Linear Imager

Use the LI3678 linear imager to capture barcode data.

Figure 26 LI3678 Bluetooth Scanner

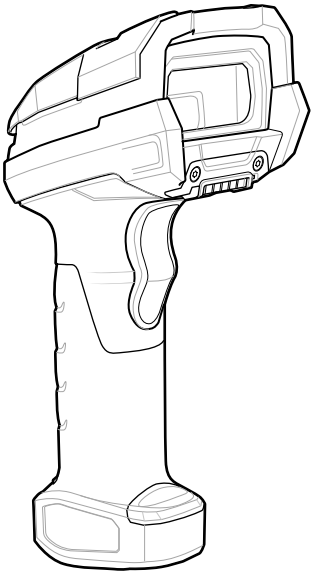

Refer to the LI3678 Product Reference Guide for more information.

NOTE: To read a barcode, a scan-enabled app is required. The device contains the DataWedge app that allows the user to enable the scanner to decode barcode data and display the barcode content.

To scan with the LI3678:

1. Pair the LI3678 with the device. See Pairing a Bluetooth Scanner for more information.
2. Ensure that an app is open on the device and a text field is in focus (text cursor in text field).
3. Point the LI3678 at a barcode.
4. Press and hold the trigger.

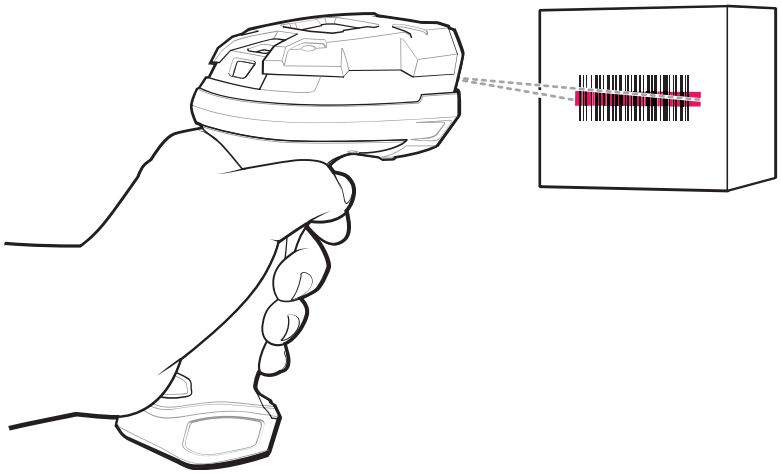

5. Ensure the aiming pattern covers the barcode.

Upon successful decode, the scanner beeps and the LED displays a single green flash.

The captured data appears in the text field.

Scanning with the DS2278 Digital Scanner

Use the DS2278 Digital Scanner to capture barcode data.

Figure 27 DS2278 Digital Scanner

Refer to the DS2278 Digital Scanner Product Reference Guide for more information.

NOTE: To read a barcode, a scan-enabled app is required. The device contains the DataWedge app that allows the user to enable the scanner to decode barcode data and display the barcode content.

To scan with the DS2278:

1. Pair the DS2278 with the device. See Pairing a Bluetooth Scanner for more information.
2. Ensure that an app is open on the device and a text field is in focus (text cursor in text field).

3. Point the scanner at a barcode.

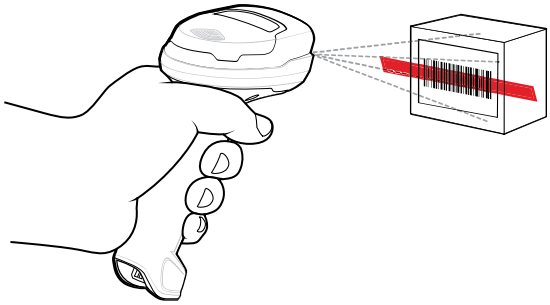

4. Press and hold the trigger.
5. Ensure the aiming pattern covers the barcode.

6. Upon successful decode, the scanner beeps and the LED flashes, and the scan line turns off.

   The captured data appears in the text field.

Scanning with the DS8178 Digital Scanner

Use the DS8178 Bluetooth Scanner to capture barcode data.

Figure 28 DS8178 Digital Scanner

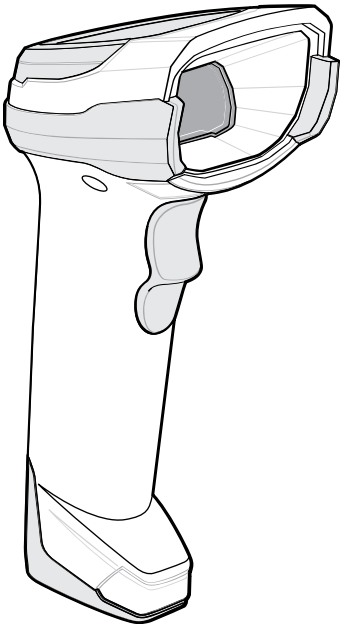

Refer to the DS8178 Digital Scanner Product Reference Guide for more information.

NOTE: To read a barcode, a scan-enabled app is required. The device contains the DataWedge app that allows the user to enable the scanner to decode barcode data and display the barcode content.

To scan with the DS8178 scanner:

1. Pair the scanner with the device. See Pairing Bluetooth Scanners for more information.
2. Ensure that an app is open on the device and a text field is in focus (text cursor in text field).
3. Point the scanner at a barcode.

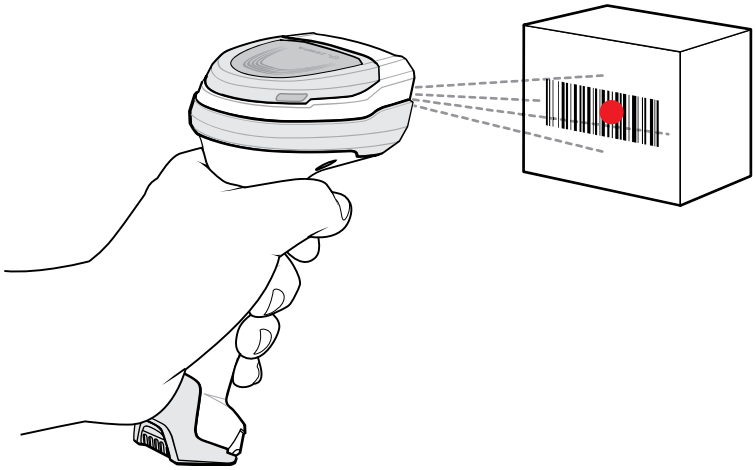

4. Press and hold the trigger.
5. Ensure the barcode is within the area formed by the aiming pattern. The aiming dot increases visibility in bright lighting conditions.

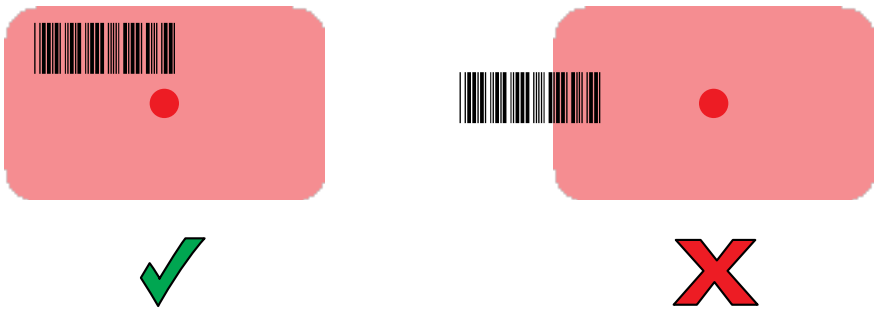

6. Upon successful decode, the scanner beeps and the LED flashes, and the scan line turns off. The captured data appears in the text field.

Pairing a Bluetooth Ring Scanner

Before using a Bluetooth Ring Scanner with the device, connect the device to the Ring Scanner.

To connect the Ring Scanner to the device, use one of the following methods:

- Near Field Communication (NFC)
- Simple Serial Interface (SSI)

- Bluetooth Human Interface Device (HID) Mode

Pairing in SSI Mode Using Near Field Communication

The device provides the ability to pair the RS5100/6100 or RS6000 Ring Scanner in SSI Mode using NFC.

NOTE: RS5100 or RS6000 Only.

1. Ensure that NFC is enabled on the device.
2. Align the NFC icon on the Ring Scanner with the NFC icon on the back of the device.

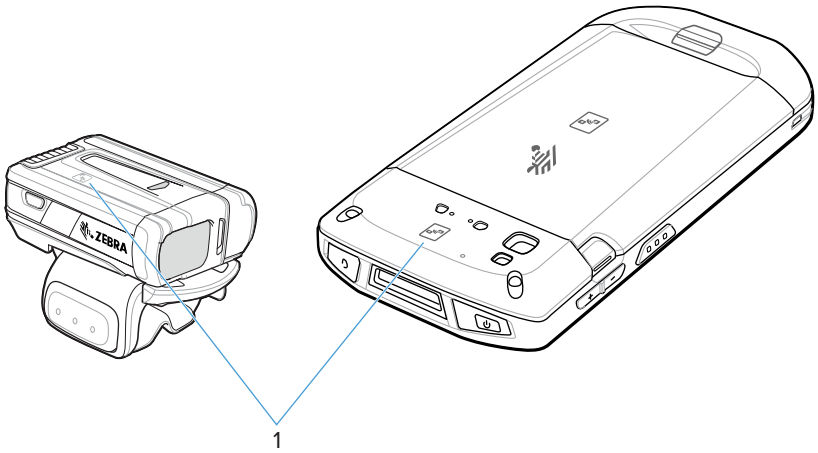

1	NFC logo

The Status LED blinks blue indicating that the Ring Scanner is attempting to establish a connection with the device. When a connection is established, the Status LED turns off and the Ring Scanner emits a single string of low/high beeps.

A notification appears on the device screen.

The icon appears in the Status bar.

Pairing in HID Mode Using Near Field Communication

The device provides the ability to pair the RS5100/RS6100 or RS6000 Ring Scanner in HID Mode using NFC.

NOTE: RS5100/RS6100 or RS6000 Only.

1. Ensure that NFC is enabled on the device.
2. Ensure that Bluetooth is enabled on both devices.

3. Place the Ring Scanner in Human Interface Device (HID) mode. If the Ring Scanner is already in HID mode, skip to step 6.
   a) Remove the battery from the Ring Scanner.
   b) Press and hold the Restore key.
   c) Install the battery onto the Ring Scanner.
   d) Keep holding the Restore key for about five seconds until a chirp is heard and the Scan LEDs flash green.
   e) Scan the barcode below to place the Ring Scanner in HID mode.

   Figure 29 Bluetooth HID Barcode

4. Remove the battery from the Ring Scanner.
5. Re-install the battery into the Ring Scanner.
6. Align the NFC icon on the Ring Scanner with the NFC icon on the device.

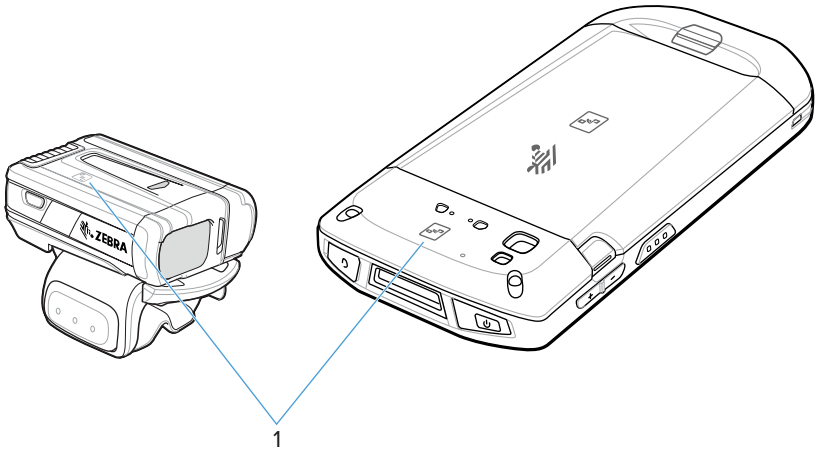

1	NFC logo

The Status LED blinks blue indicating that the Ring Scanner is attempting to establish a connection with the device. When a connection is established, the Status LED turns off and the Ring Scanner emits a single string of low/high beeps.

A notification appears on the device screen.

The icon appears in the Status bar.

Pairing Using Simple Serial Interface (SSI)

Pair the Ring Scanner to the device using Simple Serial Interface.

1. Swipe up from the bottom of the Home screen and touch .

2. Using the Ring Scanner, scan the barcode on the screen.

   The Ring Scanner emits a string of high/low/high/low beeps. The Scan LED flashes green indicating that the Ring Scanner is attempting to establish a connection with the device. When a connection is established, the Scan LED turns off and the Ring Scanner emits one string of low/high beeps.

   A notification appears on the Notification panel and the icon appears in the Status bar.

Pairing Using Bluetooth Human Interface Device

Pair the Ring Scanner to the device using Human Interface Device (HID).

1. Ensure that Bluetooth is enabled on both devices.
2. Ensure that the Bluetooth device to discover is in discoverable mode.
3. Ensure that the two devices are within 10 m (32.8 ft) of one another.
4. Place the Ring Scanner in HID mode. If the Ring Scanner is already in HID mode, skip to step 5.
   a) Remove the battery from the Ring Scanner.
   b) Press and hold **Restore**.
   c) Install the battery onto the Ring Scanner.
   d) Keep holding the Restore key for about five seconds until a chirp is heard and the Scan LEDs flash green.
   e) Scan the barcode below to place the Ring Scanner in HID mode.

   Figure 30 RS507 Bluetooth HID Barcode

   Figure 31 RS6000 Bluetooth HID Barcode

5. Remove the battery from the Ring Scanner.
6. Re-install the battery into the Ring Scanner.
7. Swipe down from the Status bar to open the Quick Access panel and then touch .
8. Touch **Bluetooth**.
9. Touch **Pair new device**. The device begins searching for discoverable Bluetooth devices in the area and displays them under **Available devices**.
10. Scroll through the list and select Ring Scanner.

    The device connects to the Ring Scanner and **Connected** appears below the device name. The Bluetooth device is added to the **Paired devices** list and a trusted (“paired”) connection is established.

    A notification appears on the Notification panel and the icon appears in the Status bar.

Pairing a Bluetooth Scanner

Before using a Bluetooth scanner with the device, connect the device to the Bluetooth scanner.

Connect the scanner to the device using one of the following methods:

- Simple Serial Interface (SSI) mode
- Bluetooth Human Interface Device (HID) mode

Pairing Using Simple Serial Interface

Pair the Ring Scanner to the device using Simple Serial Interface.

1. Swipe up from the bottom of the Home screen and touch .

2. Using the Ring Scanner, scan the barcode on the screen.

   The Ring Scanner emits a string of high/low/high/low beeps. The Scan LED flashes green indicating that the Ring Scanner is attempting to establish a connection with the device. When a connection is established, the Scan LED turns off and the Ring Scanner emits one string of low/high beeps.

   A notification appears on the Notification panel and the icon appears in the Status bar.

Pairing Using Bluetooth Human Interface Device

To pair the scanner with the device using HID:

1. Remove the battery from the scanner.

2. Replace the battery.
3. After the scanner reboots, scan the barcode below to place the scanner in HID mode.

4. On the device, swipe down from the Status bar to open the Quick Access panel and then touch ⚙.
5. Touch **Bluetooth**.
6. Touch **Pair new device**. The device begins searching for discoverable Bluetooth devices in the area and displays them under **Available devices**.
7. Scroll through the list and select XXXXX xxxxxx, where XXXXX is the scanner and xxxxxx is the serial number.

   The device connects to the scanner, the scanner beeps once and **Connected** appears below the device name. The Bluetooth device is added to the **Paired devices** list and a trusted (paired) connection is established.

DataWedge

DataWedge is a utility that adds advanced barcode scanning capability to any application without writing code. It runs in the background and handles the interface to built-in barcode scanners. The captured barcode data is converted to keystrokes and sent to the target application as if it was typed on the keypad.

DataWedge allows any app on the device to get data from input sources such as a barcode scanner, MSR, RFID, voice, or serial port and manipulate the data based on options or rules.

Configure DataWedge to:

- Provide data capture services from any app.
- Use a particular scanner, reader, or other peripheral devices.
- Properly format and transmit data to a specific app.

To configure DataWedge, refer to techdocs.zebra.com/datawedge/.

Enabling DataWedge

This procedure provides information on how to enable DataWedge on the device.

1. Swipe up from the bottom of the Home screen and touch .
2. Touch ⋮ > **Settings**.
3. Touch the **DataWedge enabled** checkbox.

   A blue checkmark appears in the checkbox indicating that DataWedge is enabled.

Disabling DataWedge

This procedure provides information on how to disable DataWedge on the device.

1. Swipe up from the bottom of the Home screen and touch .

2. Touch ⋮.
3. Touch **Settings**.
4. Touch **DataWedge enabled**.

Supported Decoders

This sections provides the supported decoders for each data capture option.

Camera Supported Decoders

This section lists the supported decoders for the internal camera.

Table 12 Camera-Supported Decoders

Decoder	Default State	Decoder	Default State	Decoder	Default State
Australian Postal	O	EAN8	X	MSI	O
Aztec	X	Grid Matrix	O	PDF417	X
Canadian Postal	O	GS1 DataBar	X	QR Code	X
Chinese 2 of 5	O	GS1 DataBar Expanded	X	Decoder Signature	O
Codabar	X	GS1 DataBar Limited	O	TLC 39	O
Code 11	O	GS1 Datamatrix	O	Trioptic 39	O
Code 128	X	GS1 QRCode	O	UK Postal	O
Code 39	X	HAN XIN	O	UPCA	X
Code 93	O	Interleaved 2 of 5	O	UPCE0	X
Composite AB	O	Japanese Postal	O	UPCE1	O
Composite C	O	Korean 3 of 5	O	US4state	O
Discrete 2 of 5	O	MAIL MARK	X	US4state FICS	O
Datamatrix	X	Matrix 2 of 5	O	US Planet	O
Dutch Postal	O	Maxicode	X	US Postnet	O
DotCode	X	MicroPDF	O		
EAN13	X	MicroQR	O		

Key: X = Enabled, O = Disabled, - = Not Supported

SE4710 Internal Imager Supported Decoders

Lists the supported decoders for the SE4710 internal imager.

Table 13 Internal Imager SE4710 Supported Decoders

Decoder	Default State	Decoder	Default State	Decoder	Default State
Australian Postal	O	EAN8	X	MSI	O
Aztec	X	Grid Matrix	O	PDF417	X
Canadian Postal	O	GS1 DataBar	X	QR Code	X
Chinese 2 of 5	O	GS1 DataBar Expanded	X	Decoder Signature	O
Codabar	X	GS1 DataBar Limited	O	TLC 39	O
Code 11	O	GS1 Datamatrix	O	Trioptic 39	O
Code 128	X	GS1 QRCode	O	UK Postal	O
Code 39	X	HAN XIN	O	UPCA	X
Code 93	O	Interleaved 2 of 5	O	UPCE0	X
Composite AB	O	Japanese Postal	O	UPCE1	O
Composite C	O	Korean 3 of 5	O	US4state	O
Discrete 2 of 5	O	MAIL MARK	X	US4state FICS	O
Datamatrix	X	Matrix 2 of 5	O	US Planet	O
Dutch Postal	O	Maxicode	X	US Postnet	O
DotCode	O	MicroPDF	O		
EAN13	X	MicroQR	O		

Key: X = Enabled, O = Disabled, - = Not Supported

RS5100 Supported Decoders

This section lists the supported decoders for the RS5100 Ring Scanner.

Table 14 RS5100-Supported Decoders

Decoder	Default State	Decoder	Default State	Decoder	Default State
Australian Postal	O	EAN8	X	MSI	O
Aztec	X	Grid Matrix	O	PDF417	X
Canadian Postal	O	GS1 DataBar	X	QR Code	X
Chinese 2 of 5	O	GS1 DataBar Expanded	X	Decoder Signature	O

Table 14 RS5100-Supported Decoders (Continued)

Decoder	Default State	Decoder	Default State	Decoder	Default State
Codabar	X	GS1 DataBar Limited	O	TLC 39	O
Code 11	O	GS1 Datamatrix	O	Trioptic 39	O
Code 128	X	GS1 QRCode	O	UK Postal	O
Code 39	X	HAN XIN	O	UPCA	X
Code 93	O	Interleaved 2 of 5	O	UPCE0	X
Composite AB	O	Japanese Postal	O	UPCE1	O
Composite C	O	Korean 3 of 5	O	US4state	O
Discrete 2 of 5	O	MAIL MARK	X	US4state FICS	O
Datamatrix	X	Matrix 2 of 5	O	US Planet	O
Dutch Postal	O	Maxicode	X	US Postnet	O
DotCode	O	MicroPDF	O		
EAN13	X	MicroQR	O		

Key: X = Enabled, O = Disabled, - = Not Supported

RS6000 Supported Decoders

This section lists the supported decoders for the RS6000 Ring Scanner.

Table 15 RS6000-Supported Decoders

Decoder	Default State	Decoder	Default State	Decoder	Default State
Australian Postal	O	EAN8	X	MSI	O
Aztec	X	Grid Matrix	O	PDF417	X
Canadian Postal	O	GS1 DataBar	X	QR Code	X
Chinese 2 of 5	O	GS1 DataBar Expanded	X	Decoder Signature	O
Codabar	X	GS1 DataBar Limited	O	TLC 39	O
Code 11	O	GS1 Datamatrix	O	Trioptic 39	O
Code 128	X	GS1 QRCode	O	UK Postal	O
Code 39	X	HAN XIN	O	UPCA	X
Code 93	O	Interleaved 2 of 5	O	UPCE0	X
Composite AB	O	Japanese Postal	O	UPCE1	O

Table 15 RS6000-Supported Decoders (Continued)

Decoder	Default State	Decoder	Default State	Decoder	Default State
Composite C	O	Korean 3 of 5	O	US4state	O
Discrete 2 of 5	O	MAIL MARK	X	US4state FICS	O
Datamatrix	X	Matrix 2 of 5	O	US Planet	O
Dutch Postal	O	Maxicode	X	US Postnet	O
DotCode	O	MicroPDF	O		
EAN13	X	MicroQR	O		

Key: X = Enabled, O = Disabled, - = Not Supported

RS507/RS507x Supported Decoders

This section lists the supported decoders for the RS507/RS507x Ring Scanner.

Table 16 RS507/RS507x Supported Decoders

Decoder	Default State	Decoder	Default State	Decoder	Default State
Australian Postal	O	EAN8	X	MSI	O
Aztec	X	Grid Matrix	O	PDF417	X
Canadian Postal	-	GS1 DataBar	X	QR Code	X
Chinese 2 of 5	O	GS1 DataBar Expanded	X	Decoder Signature	O
Codabar	X	GS1 DataBar Limited	O	TLC 39	O
Code 11	O	GS1 Datamatrix	-	Trioptic 39	O
Code 128	X	GS1 QRCode	-	UK Postal	O
Code 39	O	HAN XIN	-	UPCA	X
Code 93	O	Interleaved 2 of 5	O	UPCE0	X
Composite AB	O	Japanese Postal	O	UPCE1	O
Composite C	O	Korean 3 of 5	O	US4state	O
Discrete 2 of 5	O	MAIL MARK	-	US4state FICS	O
Datamatrix	X	Matrix 2 of 5	O	US Planet	O
Dutch Postal	O	Maxicode	X	US Postnet	O
DotCode	O	MicroPDF	O		
EAN13	X	MicroQR	O		

Key: X = Enabled, O = Disabled, - = Not Supported

DS2278 Supported Decoders

This section lists the supported decoders for the DS2278 Digital Scanner.

Table 17 DS2278 Digital Scanner-Supported Decoders

Decoder	Default State	Decoder	Default State	Decoder	Default State
Australian Postal	O	EAN8	X	MSI	O
Aztec	X	Grid Matrix	O	PDF417	X
Canadian Postal	—	GS1 DataBar	X	QR Code	X
Chinese 2 of 5	O	GS1 DataBar Expanded	X	Decoder Signature	O
Codabar	X	GS1 DataBar Limited	O	TLC 39	O
Code 11	O	GS1 Datamatrix	O	Trioptic 39	O
Code 128	X	GS1 QRCode	O	UK Postal	O
Code 39	X	HAN XIN	—	UPCA	X
Code 93	O	Interleaved 2 of 5	O	UPCE0	X
Composite AB	O	Japanese Postal	O	UPCE1	O
Composite C	O	Korean 3 of 5	O	US4state	O
Discrete 2 of 5	O	MAIL MARK	X	US4state FICS	O
Datamatrix	X	Matrix 2 of 5	O	US Planet	O
Dutch Postal	O	Maxicode	X	US Postnet	O
DotCode	O	MicroPDF	O		
EAN13	X	MicroQR	O		

Key: X = Enabled, O = Disabled, — = Not Supported

DS3678 Supported Decoders

This section lists the supported decoders for the DS3678 scanner.

Table 18 DS3678-Supported Decoders

Decoder	Default State	Decoder	Default State	Decoder	Default State
Australian Postal	O	EAN8	X	MSI	O
Aztec	X	Grid Matrix	O	PDF417	X
Canadian Postal	—	GS1 DataBar	X	QR Code	X
Chinese 2 of 5	O	GS1 DataBar Expanded	X	Decoder Signature	—

Table 18 DS3678-Supported Decoders (Continued)

Decoder	Default State	Decoder	Default State	Decoder	Default State
Codabar	X	GS1 DataBar Limited	O	TLC 39	O
Code 11	O	GS1 Datamatrix	O	Trioptic 39	O
Code 128	X	GS1 QRCode	O	UK Postal	O
Code 39	X	HAN XIN	O	UPCA	X
Code 93	O	Interleaved 2 of 5	O	UPCE0	X
Composite AB	O	Japanese Postal	O	UPCE1	O
Composite C	O	Korean 3 of 5	O	US4state	O
Discrete 2 of 5	O	MAIL MARK	X	US4state FICS	O
Datamatrix	X	Matrix 2 of 5	O	US Planet	O
Dutch Postal	O	Maxicode	X	US Postnet	O
DotCode	O	MicroPDF	O		
EAN13	X	MicroQR	O		

Key: X = Enabled, O = Disabled, — = Not Supported

LI3678 Supported Decoders

This section lists the supported decoders for the LI3678 scanner.

Table 19 LI3678-Supported Decoders

Decoder	Default State	Decoder	Default State	Decoder	Default State
Australian Postal	—	EAN8	X	MSI	O
Aztec	—	Grid Matrix	O	PDF417	—
Canadian Postal	—	GS1 DataBar	X	QR Code	—
Chinese 2 of 5	O	GS1 DataBar Expanded	X	Decoder Signature	—
Codabar	X	GS1 DataBar Limited	O	TLC 39	O
Code 11	O	GS1 Datamatrix	—	Trioptic 39	O
Code 128	X	GS1 QRCode	—	UK Postal	—
Code 39	X	HAN XIN	O	UPCA	X
Code 93	O	Interleaved 2 of 5	O	UPCE0	X
Composite AB	—	Japanese Postal	—	UPCE1	O

Table 19 LI3678-Supported Decoders (Continued)

Decoder	Default State	Decoder	Default State	Decoder	Default State
Composite C	—	Korean 3 of 5	O	US4state	—
Discrete 2 of 5	O	MAIL MARK	—	US4state FICS	—
Datamatrix	—	Matrix 2 of 5	O	US Planet	—
Dutch Postal	—	Maxicode	—	US Postnet	—
DotCode	O	MicroPDF	—		
EAN13	X	MicroQR	—		

Key: X = Enabled, O = Disabled, — = Not Supported

DS8178 Supported Decoders

This section lists the supported decoders for the DS8178 Digital scanner.

Table 20 DS8178 Digital Scanner-Supported Decoders

Decoder	Default State	Decoder	Default State	Decoder	Default State
Australian Postal	O	EAN8	X	MSI	O
Aztec	X	Grid Matrix	O	PDF417	X
Canadian Postal	—	GS1 DataBar	X	QR Code	X
Chinese 2 of 5	O	GS1 DataBar Expanded	X	Decoder Signature	—
Codabar	X	GS1 DataBar Limited	O	TLC 39	O
Code 11	O	GS1 Datamatrix	O	Trioptic 39	O
Code 128	X	GS1 QRCode	O	UK Postal	O
Code 39	X	HAN XIN	—	UPCA	X
Code 93	O	Interleaved 2 of 5	O	UPCE0	X
Composite AB	O	Japanese Postal	O	UPCE1	O
Composite C	O	Korean 3 of 5	O	US4state	O
Discrete 2 of 5	O	MAIL MARK	X	US4state FICS	O
Datamatrix	X	Matrix 2 of 5	O	US Planet	O
Dutch Postal	O	Maxicode	X	US Postnet	O
DotCode	O	MicroPDF	O		
EAN13	X	MicroQR	O		

Key: X = Enabled, O = Disabled, — = Not Supported

Wireless

This section provides information on the wireless features of the device.

The following wireless features are available on the device:

- Wireless Local Area Network (WLAN)
- Bluetooth
- Cast
- Near Field Communications (NFC)

Wireless Local Area Network

Wireless local area networks (WLANs) allow the device to communicate wirelessly inside a building. Before using the device on a WLAN, the facility must be set up with the required hardware to run the WLAN (sometimes known as infrastructure). The infrastructure and the device must both be properly configured to enable this communication.

NOTE: To extend the life of the battery, turn off Wi-Fi when not in use.

Refer to the documentation provided with the infrastructure (access points (APs), access ports, switches, Radius servers, etc.) for instructions on how to set up the infrastructure.

Once the infrastructure is set up to enforce the chosen WLAN security scheme, use the **Wireless & networks** (Android 11 only) or **Network & internet** (Android 13 only) settings to configure the device to match the security scheme.

The device supports the following WLAN security options:

- None
- Enhanced Open
- Wireless Equivalent Privacy (WEP)
- Wi-Fi Protected Access (WPA)/WPA2 Personal (PSK)
- WPA3-Personal

- WPA/WPA2/WPA3 Enterprise (EAP) (Android 11 only)
  - Protected Extensible Authentication Protocol (PEAP) - with MSCHAPV2 and GTC authentication.
  - Transport Layer Security (TLS)
  - Tunneled Transport Layer Security (TTLS) - with Password Authentication Protocol (PAP), MSCHAP and MSCHAPv2 authentication.
  - Password (PWD).
  - Lightweight Extensible Authentication Protocol (LEAP).
- WPA/WPA2-Enterprise (Android 13 only)
  - Protected Extensible Authentication Protocol (PEAP) - with MSCHAPV2 and GTC authentication.
  - Transport Layer Security (TLS)
  - Tunneled Transport Layer Security (TTLS) - with Password Authentication Protocol (PAP) with MSCHAP and MSCHAPv2 authentication, and GTC authentication.
  - Password (PWD).
  - Extensible Authentication Protocol Method for Subscriber Identity Module (SIM)
  - Extensible Authentication Protocol Method for Authentication and Key Agreement (AKA)
  - Improved Extensible Authentication Protocol Method for Authentication and Key Agreement (AKA')
  - Lightweight Extensible Authentication Protocol (LEAP).
- WPA3-Enterprise 192-bit
- WPA3-Enterprise (Android 13 only)
  - Protected Extensible Authentication Protocol (PEAP) - with MSCHAPV2 and GTC authentication.
  - Transport Layer Security (TLS)
  - Tunneled Transport Layer Security (TTLS) - with Password Authentication Protocol (PAP) with MSCHAP and MSCHAPv2 authentication, and GTC authentication.
  - Password (PWD).
  - Extensible Authentication Protocol Method for Subscriber Identity Module (SIM)
  - Extensible Authentication Protocol Method for Authentication and Key Agreement (AKA)
  - Improved Extensible Authentication Protocol Method for Authentication and Key Agreement (AKA')
  - Lightweight Extensible Authentication Protocol (LEAP).

The **Status** bar displays icons that indicate Wi-Fi network availability and Wi-Fi status.

Connecting to a Wi-Fi Network

1. Go to **Settings**.
2. Touch **Network & internet**.
3. On Android 11, touch **Wi-Fi** to open the **Wi-Fi** screen. The device searches for WLANs in the area and lists them.
4. On Android 13, touch **Internet** to open the **Internet** screen. The device searches for WLANs in the area and lists them.
5. Scroll through the list and select the desired WLAN network.

6. For open networks, touch the profile once or press and hold and then select **Connect** or for secure networks, enter the required password or other credentials, then touch **Connect**. See the system administrator for more information.

   The device obtains a network address and other required information from the network using the dynamic host configuration protocol (DHCP) protocol. To configure the device with a fixed internet protocol (IP) address, see Configuring the Device to Use a Static IP Address on page 110.

7. In the Wi-Fi setting field, **Connected** appears, indicating that the device is connected to the WLAN.

Removing a Wi-Fi Network

Remove a remembered or connected Wi-Fi network.

1. Go to **Settings**.
2. Touch **Network & Internet**.
3. On Android 11, touch **Wi-Fi**.
4. On Android 13, touch **Internet**.
5. Scroll down to the bottom of the list and touch **Saved networks**.
6. Touch the name of the network.
7. Touch **FORGET**.

WLAN Configuration

This section provides information on configuring Wi-Fi settings.

Configuring a Secure Wi-Fi Network

1. Go to **Settings**.
2. Touch **Network & Internet**.
3. On Android 11, touch **Wi-Fi**.
4. On Android 13, touch **Internet**.
5. Slide the switch to the **ON** position.
6. The device searches for WLANs in the area and lists them on the screen.
7. Scroll through the list and select the desired WLAN network.
8. Touch the desired network. If network security is **Open**, the device automatically connects to the network. For all other network security, a dialog box appears.
9. If network security is **WPA/WPA2-Personal**, or **WEP**, enter the required password and then touch **Connect**.
10. If network security is **WPA/WPA2-Personal**, **WPA3-Personal**, or **WEP**, enter the required password and then touch **Connect**.

11. If network security is **WPA/WPA2/WPA3 Enterprise**:
    a) Touch the **EAP method** drop-down list and select one of the following:
        - **PEAP**
        - **TLS**
        - **TTLS**
        - **PWD**
        - **SIM**
        - **AKA**
        - **AKA'**
        - **LEAP**
    b) Fill in the appropriate information. Options vary depending on the **EAP method** chosen.
        - When selecting **CA certificate**, Certification Authority (CA) certificates are installed using the **Security** settings.
        - When using the EAP methods PEAP, TLS, or TTLS, specify a domain.
        - Touch **Advanced options** to display additional network options.

Manually Adding a Wi-Fi Network

Manually add a Wi-Fi network if the network does not broadcast its name (SSID) or to add a Wi-Fi network when out of range.

1. Go to **Settings**.
2. Touch **Network & Internet**.
3. On Android 11, touch **Wi-Fi**.
4. On Android 13, touch **Internet**.
5. Slide the Wi-Fi switch to the **On** position.
6. Scroll to the bottom of the list and select **Add network**.
7. In the **Network name** text box, enter the name of the Wi-Fi network.
8. In the **Security** drop-down list, set the type of security to:
    - **None**
    - **Enhanced Open**
    - **WEP**
    - **WPA/WPA2-Personal**
    - **WPA3-Personal**
    - **WPA/WPA2/WPA3-Enterprise** (Android 11 only)
    - **WPA/WPA2-Enterprise** (Android 13 only)
    - **WPA3-Enterprise** (Android 13 only)
    - **WPA3-Enterprise 192-bit**
9. If the network security is **None** or **Enhanced Open**, touch **Save**.

10. If the network security is **None**, touch **Save**.
11. If the network security is **WEP**, **WPA3-Personal**, or **WPA/WPA2-Personal**, enter the required password and then touch **Save**.
12. If the network security is **WEP** or **WPA/WPA2-Personal**, enter the required password and then touch **Save**.

NOTE: By default, the network Proxy is set to None and the IP settings is set to DHCP. See Configuring for a Proxy Server for setting the connection to a proxy server and see Configuring the Device to Use a Static IP Address for setting the device to use a static IP address.

13. If network security is **WPA/WPA2/WPA3 Enterprise**:
    a) Touch the **EAP method** drop-down list and select one of the following:
    - **PEAP**
    - **TLS**
    - **TTLS**
    - **PWD**
    - **SIM**
    - **AKA**
    - **AKA'**
    - **LEAP**

    b) Fill in the appropriate information. Options vary depending on the **EAP method** chosen.
    - When selecting **CA certificate**, Certification Authority (CA) certificates are installed using the **Security** settings.
    - When using the EAP methods PEAP, TLS, or TTLS, specify a domain.
    - Touch **Advanced options** to display additional network options.
14. If the network security is WPA3-Enterprise 192-bit:
    - Touch **CA certificate** and select a Certification Authority (CA) certificate. Note: Certificates are installed using the Security settings.
    - Touch **User certificate** and select a user certificate. Note: User certificates are installed using the Security settings.
    - In the **Identity** text box, enter the username credentials.
15. Touch **Save**. To connect to the saved network, touch and hold on the saved network and select **Connect to network**.

Configuring for a Proxy Server

A proxy server is a server that acts as an intermediary for requests from clients seeking resources from other servers. A client connects to the proxy server and requests some service, such as a file, connection, web page, or other resource, available from a different server. The proxy server evaluates the request according to its filtering rules. For example, it may filter traffic by IP address or protocol. If the request is validated by the filter, the proxy provides the resource by connecting to the relevant server and requesting the service on behalf of the client.

It is important for enterprise customers to be able to set up secure computing environments within their companies, making proxy configuration essential. Proxy configuration acts as a security barrier ensuring

that the proxy server monitors all traffic between the Internet and the intranet. This is normally an integral part of security enforcement in corporate firewalls within intranets.

1. Go to **Settings**.
2. Touch **Network & Internet**.
3. On Android 11, touch **Wi-Fi**.
4. On Android 13, touch **Internet**.
5. Slide the Wi-Fi switch to the **On** position.
6. In the network dialog box, select and touch a network.
7. If configuring the connected network, touch to edit the network details and then touch the down arrow to hide the keyboard.
8. Touch **Advanced options**.
9. Touch **Proxy** and select **Manual**.
10. In the **Proxy hostname** text box, enter the address of the proxy server.
11. In the **Proxy port** text box, enter the port number for the proxy server.
12. In the **Bypass proxy for** text box, enter addresses for web sites that are not required to go through the proxy server. Use a comma “,” between addresses. Do not use spaces or carriage returns between addresses.
13. If configuring the connected network, touch **Save** otherwise, touch **Connect**.
14. Touch **Connect**.

Configuring the Device to Use a Static IP Address

By default, the device is configured to use Dynamic Host Configuration Protocol (DHCP) to assign an Internet protocol (IP) address when connecting to a wireless network.

1. Go to **Settings**.
2. Touch **Network & Internet**.
3. On Android 11, touch **Wi-Fi**.
4. On Android 13, touch **Internet**.
5. Slide the Wi-Fi switch to the **On** position.
6. In the network dialog box, select and touch a network.
7. If configuring the connected network, touch to edit the network details and then touch the down arrow to hide the keyboard.
8. Touch **Advanced options**.
9. Touch **IP settings** and select **Static**.
10. In the **IP address** text box, enter an IP address for the device.
11. If required, in the **Gateway** text box, enter a gateway address for the device.
12. If required, in the **Network prefix length** text box, enter the prefix length.
13. If required, in the **DNS 1** text box, enter a Domain Name System (DNS) address.
14. If required, in the **DNS 2** text box, enter a DNS address.

15. If configuring the connected network, touch **Save** otherwise, touch **Connect**.

Wi-Fi Preferences

Use the Wi-Fi preferences to configure advanced Wi-Fi settings. From the Wi-Fi screen, scroll down to the bottom of the screen and touch Wi-Fi preferences on Android 11 or Network preference on Android 13.

- **Turn on Wi-Fi automatically** - When enabled, Wi-Fi automatically turns back on when near high-quality saved networks.
- **Open network notification** (Android 11 only) or **Notify for public networks** (Android 13 only) - When enabled, notifies the user when an open network is available.
- **Additional settings** - Touch to view additional Wi-Fi settings.
- **Advanced** - Touch to expand options. (Android 11 only)
  - **Additional settings** - See Additional Settings.
  - **Install Certificates** - Touch to install certificates.
  - **Network rating provider** - Disabled (AOSP devices). To help determine what constitutes a good Wi-Fi network, Android supports external Network rating providers that provide information about the quality of open Wi-Fi networks. Select one of the providers listed or **None**. If none are available or selected, the Connect to open networks feature is disabled. (Android 11 only)
  - **Wi-Fi Direct** - Displays a list of devices available for a direct Wi-Fi connection.

Additional Wi-Fi Settings

Use the Additional Settings to configure additional Wi-Fi settings.

NOTE: Additional Wi-Fi settings are for the device, not for a specific wireless network.

- **Regulatory**
  - **Country Selection** - Displays the acquired country code if 802.11d is enabled, else it displays the currently selected country code.
  - **Region code** - Displays the current region code.
- **Band and Channel Selection**
  - **Wi-Fi frequency band** - Set the frequency band to: **Auto** (default), **5 GHz only** or **2.4 GHz only**.
  - **Available channels (2.4 GHz)** - Touch to display the **Available channels** menu. Select specific channels and touch **OK**.
  - **Available channels (5 GHz)** - Touch to display the **Available channels** menu. Select specific channels and touch **OK**.

- **Logging**
  - **Logging** – Touch to enable advanced logging or change the log directory. (Android 11 only)
  - **Advanced Logging** - Touch to enable logging, enable **Wi-Fi Verbose Logging**, or change the log directory (Android 13 only).
  - **Wireless logs** - Use to capture Wi-Fi log files.
    - **Fusion Logger** - Touch to open the **Fusion Logger** application. This application maintains a history of high level WLAN events which helps to understand the status of connectivity.
    - **Fusion Status** - Touch to display live status of WLAN state. Also provides information about the device and connected profile.
- **About**
  - **Version** - Displays the current version information. Touch the version to display addition version details.

Wi-Fi Direct

Wi-Fi Direct devices can connect to each other without having to go through an access point. Wi-Fi Direct devices establish their own ad-hoc network when required, letting you see which devices are available and choose which one you want to connect to.

1. Go to **Settings**.
2. Touch **Network & Internet**.
3. On Android 11, touch **Wi-Fi**.
4. On Android 13, touch **Internet**.
5. Slide the **Wi-Fi** switch to the **On** position.
6. In the network dialog box, select and touch a network.
7. On Android 11, scroll down to the bottom of the screen and touch **Wi-Fi preferences** > **Advanced** > **Wi-Fi Direct**. The device begins searching for another Wi-Fi Direct device.
8. On Android 13, scroll down to the bottom of the screen and touch **Network preferences** > **Wi-Fi Direct**. The device begins searching for another Wi-Fi Direct device.
9. Under **Peer devices**, touch the other device name.
10. On the other device, select **Accept**.

    Connected appears on the device. On both devices, in their respective Wi-Fi Direct screens, the other device name appears in the list.

Bluetooth

Bluetooth devices can communicate without wires, using frequency-hopping spread spectrum (FHSS) radio frequency (RF) to transmit and receive data in the 2.4 GHz Industry Scientific and Medical (ISM) band (802.15.1). Bluetooth wireless technology is specifically designed for short-range (10 m (32.8 ft)) communication and low power consumption.

Devices with Bluetooth capabilities can exchange information (for example, files, appointments, and tasks) with other Bluetooth enabled devices such as printers, access points, and other mobile devices.

The device supports Bluetooth Low Energy. Bluetooth Low Energy is targeted at applications in the healthcare, fitness, security, and home entertainment industries. It provides reduced power consumption and cost while maintaining standard Bluetooth range.

Adaptive Frequency Hopping

Adaptive Frequency Hopping (AFH) is a method of avoiding fixed frequency interferers, and can be used with Bluetooth voice. All devices in the piconet (Bluetooth network) must be AFH-capable in order for AFH to work. There is no AFH when connecting and discovering devices. Avoid making Bluetooth connections and discoveries during critical 802.11b communications.

AFH for Bluetooth consists of four main sections:

- Channel Classification - A method of detecting an interference on a channel-by-channel basis, or pre-defined channel mask.
- Link Management - Coordinates and distributes the AFH information to the rest of the Bluetooth network.
- Hop Sequence Modification - Avoids interference by selectively reducing the number of hopping channels.
- Channel Maintenance - A method for periodically re-evaluating the channels.

When AFH is enabled, the Bluetooth radio “hops around” (instead of through) the 802.11b high-rate channels. AFH coexistence allows enterprise devices to operate in any infrastructure.

The Bluetooth radio in this device operates as a Class 2 device power class. The maximum output power is 2.5 mW and the expected range is 10 m (32.8 ft). A definition of ranges based on power class is difficult to obtain due to power and device differences, and whether in open space or closed office space.

NOTE: It is not recommended to perform Bluetooth wireless technology inquiry when high rate 802.11b operation is required.

Security

The current Bluetooth specification defines security at the link level. Application-level security is not specified. This allows application developers to define security mechanisms tailored to their specific needs. Link-level security occurs between devices, not users, while application-level security can be implemented on a per-user basis. The Bluetooth specification defines security algorithms and procedures required to authenticate devices, and if needed, encrypt the data flowing on the link between the devices. Device authentication is a mandatory feature of Bluetooth while link encryption is optional.

Pairing of Bluetooth devices is accomplished by creating an initialization key used to authenticate the devices and create a link key for them. Entering a common personal identification number (PIN) in the devices being paired generates the initialization key. The PIN is never sent over the air. By default, the Bluetooth stack responds with no key when a key is requested (it is up to the user to respond to the key request event). Authentication of Bluetooth devices is based upon a challenge-response transaction. Bluetooth allows for a PIN or passkey used to create other 128-bit keys used for security and encryption. The encryption key is derived from the link key used to authenticate the pairing devices. Also, the limited range and fast frequency hopping of the Bluetooth radios make long-distance eavesdropping difficult.

Recommendations are:

- Perform pairing in a secure environment.
- Keep PIN codes private and do not store the PIN codes in the device.
- Implement application-level security.

Bluetooth Profiles

The device supports the Bluetooth services listed.

Table 21 Bluetooth Profiles

Profile	Description
Advanced Audio Distribution Profile (A2DP)	Allows the device to stream stereo-quality audio to a wireless headset or wireless stereo speakers.
Audio/Video Remote Control Profile (AVRCP)	Allows the device to control A/V equipment to which a user has access. It may be used in concert with A2DP.
Dial Up Networking (DUN)	Provides a standard to access the Internet and other dial-up services over Bluetooth.
Generic Attribute Profile (GATT)	Provides profile discovery and description services for Bluetooth Low Energy protocol. It defines how attributes are grouped together into sets to form services.
Generic Access Profile (GAP)	Use for device discovery and authentication.
Human Interface Device Profile (HID)	Allows Bluetooth keyboards, pointing devices, gaming devices and remote monitoring devices to connect to the device.
Hands-Free Profile (HFP)	Allows car hands-free kits to communicate with the device in the car.
Headset Profile (HSP)	Allows a hands-free device, such as a Bluetooth headset, to place and receive calls on the device.
OBject EXchange (OBEX)	Facilitates the exchange of binary objects between devices.
Object Push Profile (OPP)	Allows the device to push and pull objects to and from a push server.
Out of Band (OOB)	Allows exchange of information used in the pairing process. Pairing is completed using the Bluetooth radio, but requires information from the OOB mechanism. Using OOB with NFC enables pairing when devices simply get close, rather than requiring a lengthy discovery process.
Personal Area Network (PAN)	Allows the use of Bluetooth Network Encapsulation Protocol to provide L3 networking capabilities over a Bluetooth link. Only PANU role is supported.
Phone Book Access Profile (PBAP)	Allows exchange of Phone Book Objects between a car kit and a mobile device to allow the car kit to display the name of the incoming caller; allow the car kit to download the phone book so you can initiate a call from the car display.
Serial Port Profile (SPP)	Allows use of RFCOMM protocol to emulate serial cable connection between two Bluetooth peer devices. For example, connecting the device to a printer.
Service Discovery Protocol (SDP)	Handles the search for known and specific services as well as general services.
Symbol Serial Interface (SSI)	Allows for communication with Bluetooth Imager.

Bluetooth Power States

The Bluetooth radio is off by default.

- **Suspend** - When the device goes into Sleep mode, the Bluetooth radio stays on.

- **Airplane Mode** -
  - Android A10 OS version and previous versions - When the device is placed in Airplane Mode, the Bluetooth radio turns off. When Airplane mode is disabled, the Bluetooth radio returns to the prior state. When in Airplane Mode, the Bluetooth radio can be turned back on if desired.
  - Android A11 OS version and versions onward - When the device is placed in Airplane Mode, the Bluetooth radio is not turned off when the device is connected to a Bluetooth headset or hearing device.
- **Airplane Mode** - When the device is placed in Airplane Mode, the Bluetooth radio is not turned off when the device is connected to a Bluetooth headset or hearing device.

Bluetooth Radio Power

Turn off the Bluetooth radio to save power or if entering an area with radio restrictions (for example, an airplane). When the radio is off, other Bluetooth devices cannot see or connect to the device. Turn on the Bluetooth radio to exchange information with other Bluetooth devices (within range). Communicate only with Bluetooth radios in close proximity.

NOTE: To achieve optimal battery life, turn off radios when not in use.

Enabling Bluetooth

1. Swipe down from the Status bar to open the Notification panel.
2. Touch to turn Bluetooth on.

Disabling Bluetooth

1. Swipe down from the Status bar to open the Notification panel.
2. Touch to turn Bluetooth off.

Discovering Bluetooth Device(s)

The device can receive information from discovered devices without pairing. However, once paired, the device and a paired device exchange information automatically when the Bluetooth radio is on.

1. Ensure that Bluetooth is enabled on both devices.
2. Ensure that the Bluetooth device to discover is in discoverable mode.
3. Ensure that the two devices are within 10 m (32.8 ft) of one another.
4. Swipe down from the Status bar to open the Quick Access panel.
5. Touch and hold **Bluetooth**.
6. Touch **Pair new device**. The device begins searching for discoverable Bluetooth devices in the area and displays them under **Available devices**.
7. Scroll through the list and select a device. The Bluetooth pairing request dialog box appears.
8. Touch **Pair** on both devices.

9. The Bluetooth device is added to the **Paired devices** list and a trusted ("paired") connection is established.

Changing the Bluetooth Name

By default, the device has a generic Bluetooth name that is visible to other devices when connected.

1. Go to **Settings**.
2. Touch **Connected devices** > **Connection preferences** > **Bluetooth**.
3. If Bluetooth is not on, move the switch to turn Bluetooth on.
4. Touch **Device name**.
5. Enter a name and touch **RENAME**.

Connecting to a Bluetooth Device

Once paired, connect to a Bluetooth device.

1. Go to **Settings**.
2. Touch **Connected devices** > **Connection preferences** > **Bluetooth**.
3. In the list, touch the unconnected Bluetooth device.

   When connected, **Connected** appears below the device name.

Selecting Profiles on the Bluetooth Device

Some Bluetooth devices have multiple profiles.

1. Go to **Settings**.
2. Touch **Connected devices** > **Connection preferences** > **Bluetooth**.
3. In the **Paired Devices** list, touch ⚙ next to the device name.
4. Turn on or off a profile to allow the device to use that profile.

Unpairing a Bluetooth Device

Unpairing a Bluetooth device erases all pairing information.

1. Go to **Settings**.
2. Touch **Connected devices** > **Connection preferences** > **Bluetooth**.
3. In the **Paired Devices** list, touch ⚙ next to the device name.
4. Touch **FORGET**.

Cast

Use **Cast** to mirror the device screen on a Miracast enabled wireless display.

1. Go to **Settings**.
2. Touch **Connected devices** > **Connection preferences** > **Cast**.

3. Touch ⋮ > **Enable wireless display**.

   The device searches for nearby Miracast devices and lists them.

4. Touch a device to begin casting.

Near Field Communication

NFC/HF RFID is a short-range wireless connectivity technology standard that enables a secure transaction between a reader and a contactless smart card.

The technology is based on ISO/IEC 14443 type A and B (proximity) ISO/IEC 15693 (vicinity) standards, using the HF 13.56 MHz unlicensed band.

The device supports the following operating modes:

- Reader mode
- Card Emulation mode.

Using NFC, the device can:

- Read contactless cards, such as contactless tickets, ID cards, and ePassport.
- Read and write information to contactless cards, such as SmartPosters and tickets, as well as devices with an NFC interface, such as vending machines.
- Read information from supported medical sensors.
- Pair with supported Bluetooth devices such as printers, ring scanners (for example, RS6000), and headsets (for example, HS3100).
- Exchange data with another NFC device.
- Emulate a contactless card such as a ticket.

The device's NFC antenna is positioned to read NFC cards from the top of the device while the device is being held.

Reading NFC Cards

Read contactless cards using NFC.

1. Launch an NFC-enabled application.

2. Hold the device as shown.

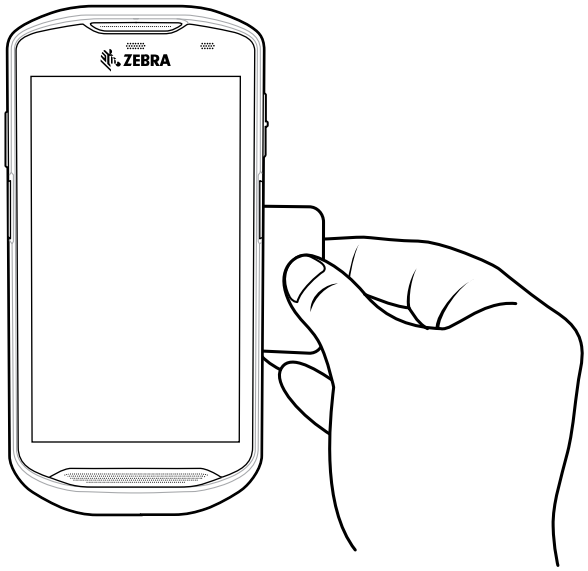

3. Move the card to the NFC antenna on the back of the device.
4. Move the device close to the NFC card until it detects the card.
5. Hold the card steadily until the transaction is complete (usually indicated by the application).

Sharing Information Using NFC

You can beam content like a web page, contact cards, pictures, YouTube links, or location information from your screen to another device by bringing the devices together back to back.

Make sure both devices are unlocked, support NFC, and have both NFC and Android Beam turned on.

1. Open a screen that contains a web page, video, photo, or contact.
2. Move the back of the device toward the back of the other device.
3. Align the NFC logo on the device with the NFC antenna on the other device.
4. Move the front of the device toward the front of the other device.

   When the devices connect, a sound emits, the image on the screen reduces in size, and the message **Touch to beam** displays.

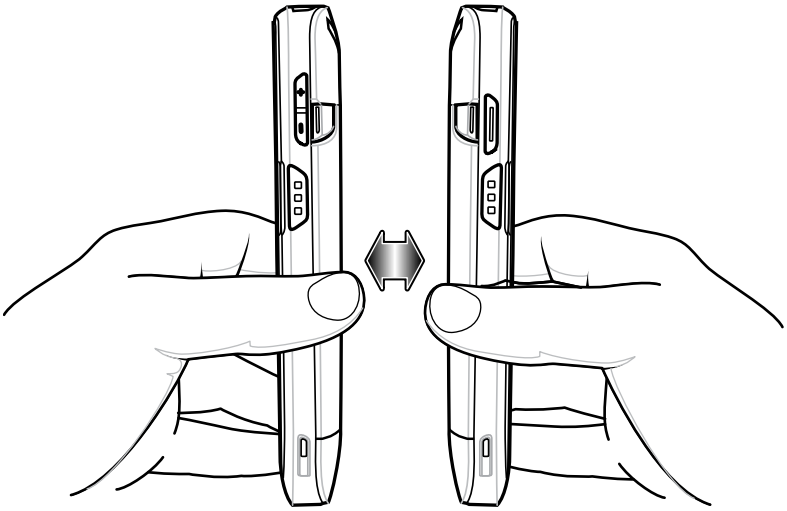

5. Touch anywhere on the screen.

   The transfer begins.

Enterprise NFC Settings

Improve NFC performance or increase battery life by selecting which NFC features to use on the device.

- **Card Detection Mode** - Select a card detection mode.
  - **Low** - Increases battery life by lowering the NFC detection speed.
  - **Hybrid** - Provides a balance between NFC detection speed and battery life (default).
  - **Standard** - Provides the optimal NFC detection speed, but reduces battery life.
- **Supported Card Technology** - Select an option to detect only one NFC tag type, increasing battery life, but reducing detection speed.
  - **ISO 14443 Type A**
  - **ISO 14443 Type B**
  - **FeliCa**
  - **ISO15693**
- **NFC Debug Logging** - Use to enable or disable debug logging for NFC.

Accessories

This section provides information for using the accessories for the device.

Device Accessories

This section provides information for using the accessories for the device. The table below lists the accessories available for the device.

Table 22 Accessories

Accessory	Part Number	Description
Cradles		
1-Slot USB/Charge Only Cradle Kit	CRD-TC51-1SCU-01	Provides device charging and communication. Includes cradle, power supply (PWR-BGA12V50W0WW) and DC line cord.
1-Slot Workstation Docking Cradle	CRD-TC5X-1SWS-01	Provides device charging and contains additional ports for HDMI, Ethernet, and USB ports that enable device to be used as a workstation computer when connected to a HDMI monitor, keyboard and mouse. Includes (PWR-BGA12V50W0WW) and DC line cord.
2-Slot USB/Ethernet Cradle Kit	CRD-TC5X-2SETH-02	Provides device and spare battery charging, and USB and Ethernet communication. Includes cradle, power supply (PWR-BGA12V50W0WW) and DC line cord.
4-Slot Charge Only Cradle with Battery Charger Kit	CRD-TC51-5SC4B-01	Charges up to four devices and four spare batteries. Includes cradle, power supply (PWR-BGA12V108W0WW) and DC line cord.
5-Slot Charge Only Cradle Kit	CRD-TC51-5SCHG-01	Charges up to five devices. Includes, cradle, power supply (PWR-BGA12V108W0WW) and DC line cord.
Healthcare 5-Slot Charge Only Cradle Kit	CRD-TC51-HC5SC-01	Charges up to five devices. Includes, cradle, power supply (PWR-BGA12V108W0WW) and DC line cord.
5-Slot Ethernet Cradle Kit	CRD-TC51-5SETH-01	Provides device charging and provides Ethernet communication for up to five devices. Includes cradle, power supply (PWR-BGA12V108W0WW) and DC line cord.
Cradle Mount	BRKT-SCRD-SMRK-01	Mounts the 5-Slot Charge Only Cradle, 5-Slot Ethernet Cradle, and 4-Slot Battery Charger to a wall or rack.
USB-Ethernet Adapter	KT-TC51-ETH1-01	Provides USB and Ethernet communication with the 1-Slot USB/Charge Only Cradle Kit.

Table 22 Accessories (Continued)

Accessory	Part Number	Description
Batteries and Chargers		
PowerPrecisionPlus Battery	BTRY-TC51-43MA1-01	Replacement battery (single pack).
	BTRY-TC51-43MA1-10	Replacement battery (10–pack).
4-Slot Battery Charger Kit	SAC-TC51-4SCHG-01	Charges up to four battery packs. Includes cradle, power supply (PWR-BGA12V50W0WW) and DC line cord.
Charge and Communication Cables		
Rugged Charge/USB Cable	CBL-TC51-USB1-01	Provides communication and power to the device. Requires power supply PWR-WUA5V12W0xx.
Rugged USB-C Adapter	ADPTR-TC56-USBC-01	Provides communication and power to the device using a USB-C cable (CBL-TC5X-USBC2A-01).
USB-C Communication and Charge Cable	CBL-TC5X-USBC2A-01	Provides UBC-A to USB-C communication and power to the device.
USB Communication Cable	25-124330-01R	Provides micro USB to USB communication for use with 1-Slot USB/Charge Only Cradle Kit.
Audio Accessories		
2.5 mm Audio Adapter	CBL-TC51-HDST25-01	Plugs into the device and provides audio to a wired headset with 2.5 mm plug.
2.5 mm Headset	HDST-25MM-PTVP-01	Use for PTT and VoIP calls.
3.5 mm Audio Adapter	CBL-TC51-HDST35-01	Plugs into the device and provides audio to a wired headset with collared 3.5 mm plug.
3.5 mm Headset	HDST-35MM-PTVP-01	Use for PTT and VoIP calls.
Miscellaneous		
Rugged Boot with Hand strap	SG-TC5X-EXO1-01	Provides additional protection for the device and hand strap.
Rugged Boot	SG-TC5X-EXONHS-01	Provides additional protection for the device.
Trigger Handle	TRG-TC51-SNP1-03	Adds gun-style handle with a scanner trigger for comfortable and productive scanning. Requires Rugged Boot.
Trigger Handle and Rugged Boot Kit	KT-TC51-TRG1-01	Adds gun-style handle with a scanner trigger for comfortable and productive scanning.
Screen Protector	KT-TC51-SCRNP1-01	Add additional screen protection.
DEX Solution	DEX30	Provides wireless DEX communications to the device.
Wrist Lanyard	SG-PD40-WLD1-01	Use to hold the device on wrist. For use with Trigger Handle or Rugged Boot.

Table 22 Accessories (Continued)

Accessory	Part Number	Description
Rugged I/O Connector	ADP-TC51-RGIO1-03	Replacement Rugged I/O Connector (3-pack).
Carrying Solutions		
Soft Holster	SG-TC51-HLSTR1-01	Use to hold the device on hip. Accepts device with Rugged Boot and Trigger Handle.
Hand Strap	SG-TC51-EHDSTP1-03	Replacement hand strap with hand strap mounting clip (3–pack).
Basic Hand Strap	SG-TC51-BHDSTP1-03	Provide a hand strap to assist in holding the device without a Rugged Boot.
Plastic Stylus and Coiled Tether	SG-TC7X-STYLUS-03	Plastic stylus with coiled tether (3-pack).
Metal Stylus	SG-STYLUS-TCX-MTL-03	Stainless steel and brass stylus with micro-knit hybrid mesh fiber tip, especially for use in rain or snow (3-pack).
Power Supplies		
Power Supply	PWR-BGA12V50W0WW	Provides power to the 1-Slot USB Charge cradle and 4-Slot Spare Battery Charger. Requires AC line cord.
Power Supply	PWR-BGA12V108W0WW	Provides power to the 4-Slot Charge Only Cradle with battery Charger, 5-Slot Charge Only cradle and the 5-Slot Ethernet Cradle. Requires DC Line Cord, p/n 50–16002–029R and country specific three wire grounded AC line cord sold separately.
Power Supply	PWR-WUA5V12W0US	Provides 5 VDC, 2.5 A power to the Rugged Charge/USB cable. Includes plug adapter for use in the United States.
Power Supply	PWR-WUA5V12W0GB	Provides 5 VDC, 2.5 A power to the Rugged Charge/USB cable. Includes plug adapter for use in the United Kingdom.
Power Supply	PWR-WUA5V12W0EU	Provides 5 VDC, 2.5 A power to the Rugged Charge/USB cable. Includes plug adapter for use in the European Union.
Power Supply	PWR-WUA5V12W0AU	Provides 5 VDC, 2.5 A power to the Rugged Charge/USB cable. Includes plug adapter for use in Australia.
Power Supply	PWR-WUA5V12W0CN	Provides 5 VDC, 2.5 A power to the Rugged Charge/USB cable. Includes plug adapter for use in China.
Power Supply	PWR-WUA5V12W0IN	Provides 5 VDC, 2.5 A power to the Rugged Charge/USB cable. Includes plug adapter for use in India.
Power Supply	PWR-WUA5V12W0KR	Provides 5 VDC, 2.5 A power to the Rugged Charge/USB cable. Includes plug adapter for use in Korea.
Power Supply	PWR-WUA5V12W0BR	Provides 5 VDC, 2.5 A power to the Rugged Charge/USB cable. Includes plug adapter for use in Brazil.
DC Line Cord	CBL-DC-381A1-01	Provides power from the power supply (PWR-BGA12V108W0WW) to the 4-Slot Charge Only Cradle with Battery Charger, 5-Slot Charge Only Cradle and 5-Slot Ethernet Cradle.

Table 22 Accessories (Continued)

Accessory	Part Number	Description
DC Line Cord	CBL-DC-388A1-01	Provides power from the power supply (PWR-BGA12V50W0WW) to the 1-Slot USB/Charge Only Cradle and 4-Slot Battery Charger.
2-way DC Cable	CBL-DC-523A1-01	Connects one power supply (PWR-BGA12V108W0WW) to two 4-Slot Battery Chargers.
US AC Line Cord	23844-00-00R	Provide power to power supplies.

Main Battery Charging

The device's Charging/Notification LED indicates the status of the battery charging in the device. See Charging Indicators for device charging status. The battery charges from fully depleted to 90% in approximately 2.5 hours, and from fully depleted to 100% in approximately three hours.

NOTE: In many cases the 90% charge provides plenty of charge for daily use. A full 100% charge lasts for approximately 14 hours of use.

To achieve optimal fast charging results use only Zebra charging accessories and batteries. Charge batteries at room temperature with the device in sleep mode.

Spare Battery Charging

The Spare Battery Charging LED on the cup indicates the status of the spare battery charging. The battery charges from fully depleted to 90% in approximately 2.3 hours, and from fully depleted to 100% in approximately three hours.

NOTE: In many cases the 90% charge provides plenty of charge for daily use. A full 100% charge lasts for approximately 14 hours of use.

To achieve optimal fast charging results use only Zebra charging accessories and batteries.

Table 23 Spare battery LED Charging Indicators

Indication	LED	Description
Solid amber		Spare battery is charging.
Solid amber with alternate bright amber		Best spare battery is charging. Not available on 2-Slot USB/Ethernet Cradle.
Solid Green		Spare battery charging is complete.
Solid Green with alternate bright green		Best spare battery charging is complete. Not available on 2-Slot USB/ Ethernet Cradle.

Table 23 Spare battery LED Charging Indicators (Continued)

Indication	LED	Description
Solid Red		Spare battery is charging and battery is at the end of useful life. Charging complete and battery is at the end of useful life.
Fast Blinking Red (2 blinks/ second)		Error in charging; check placement of spare battery and battery is at the end of useful life.
Off		No spare battery in slot. Spare battery not placed in slot correctly. Cradle is not powered.

Charging Temperature

Charge batteries in temperatures from 5°C to 40°C (41°F to 104°F). The device or cradle always performs battery charging in a safe and intelligent manner. At higher temperatures (for example: approximately +37°C (+98°F)) the device or cradle may for small periods of time alternately enable and disable battery charging to keep the battery at acceptable temperatures. The device and cradle indicates when charging is disabled due to abnormal temperatures via its LED.

1-Slot USB Cradle

The 1-Slot USB Cradle provide power and host communications.

CAUTION: Ensure that you follow the guidelines for battery safety described in Battery Safety Guidelines.

The 1-Slot USB Charge Cradle:

- Provides 5 VDC power for operating the device.
- Charges the device's battery.
- Provides USB communication with host computer.

Figure 32 1–Slot USB Charge Cradle

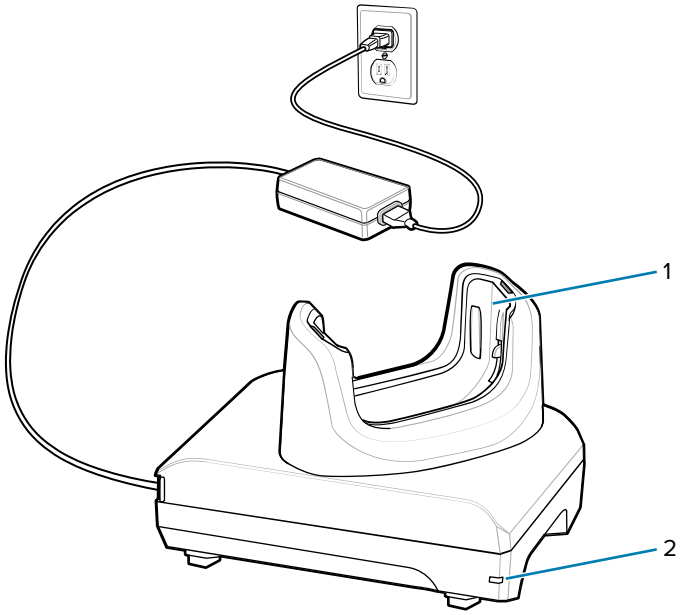

1	Cup insert
2	Power LED

Setup

Figure 33 1–Slot USB Charge Cradle Setup

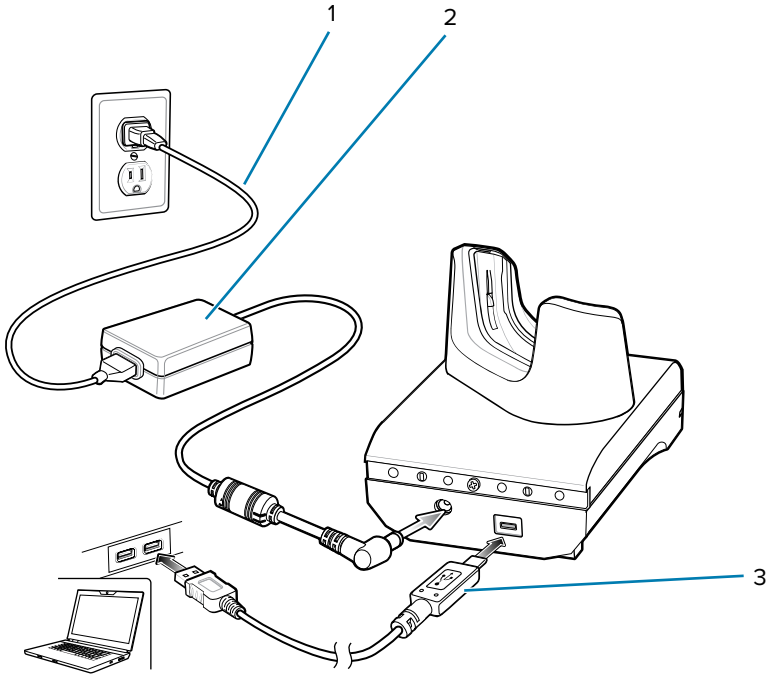

1	AC line cord

2	Power supply
3	USB cable

Charging the Device in the Cradle

To charge the device:

NOTE: If the device has a Rugged Boot, remove the cup insert before inserting the device.

IMPORTANT: By default, the device includes an interface connector. If the interface connector is removed for USB Type C cable connectivity, then it must be replaced before charging or receiving an Ethernet IP address if placed in a cradle.

1. Insert the device into the slot to begin charging.

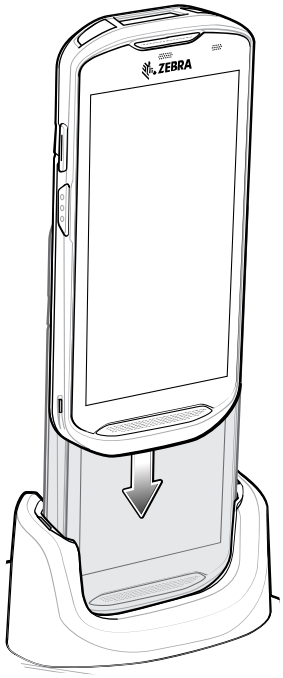

2. Ensure that the device is properly seated.

Inserting a TC5X with Rugged Boot into Cradle

Each cradle cup has an insert that must be removed prior to inserting the device with Rugged Boot. Remove the insert and then insert the device into the cup.

Figure 34 Remove the Insert from the Cup

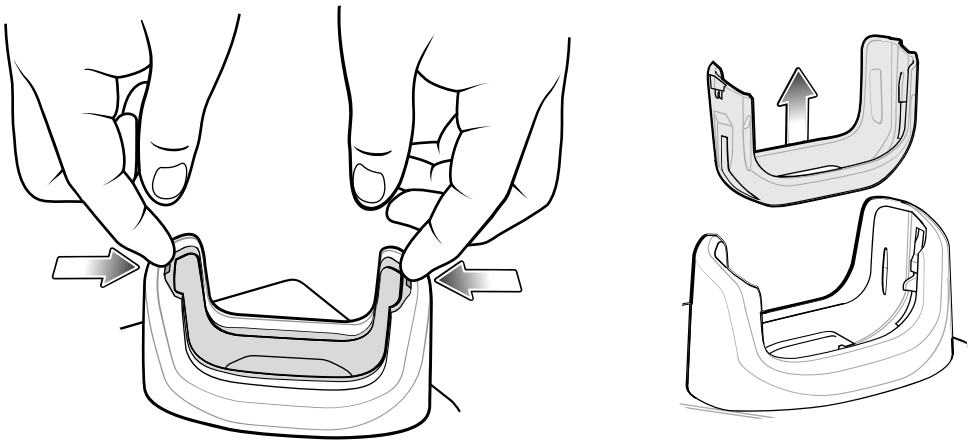

1-Slot Workstation Docking Cradle

The TC5X Workstation Cradle is an enhanced single-slot charging cradle with additional ports for HDMI, Ethernet, and four USB ports that enable a device to be used as a workstation computer when connected to a HDMI monitor, keyboard and mouse.

CAUTION: Ensure that you follow the guidelines for battery safety described in Battery Safety Guidelines.

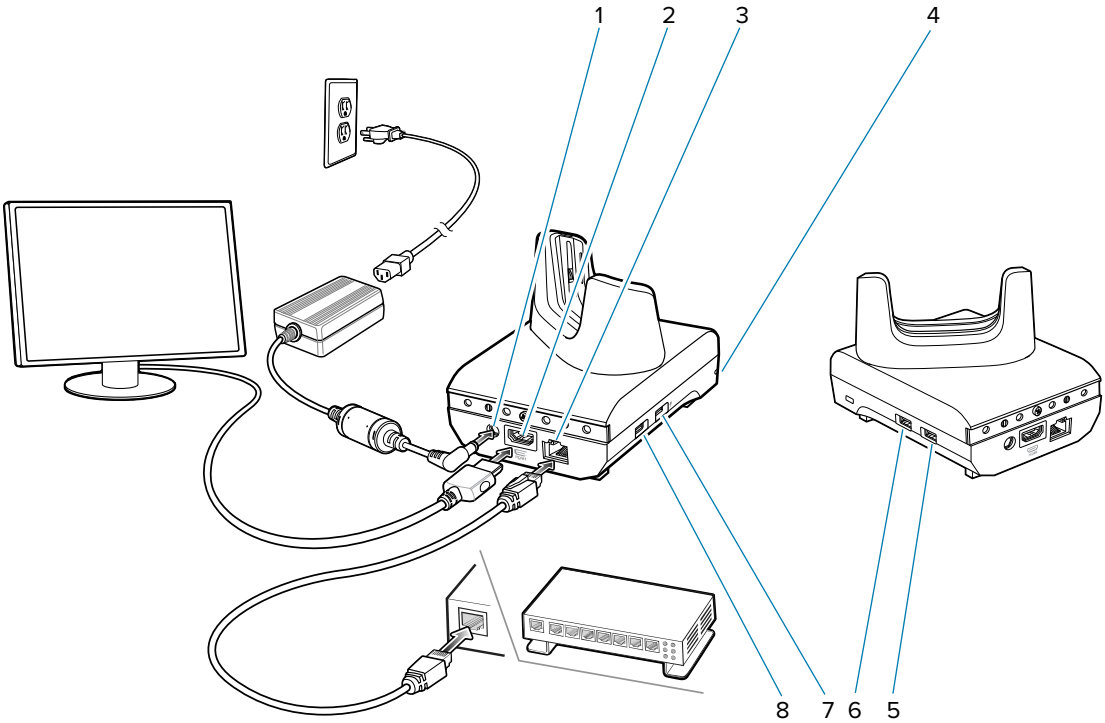

1	Power Port	Provides power to the cradle.
2	HDMI Port	Connects to monitor.
3	Ethernet Port	Connects to an Ethernet network.
4	LED	Indicates that power is applied to the cradle.
5	USB Type A Port	Connection for mouse or keyboard.
6	USB Type A Port	Connection for mouse or keyboard.
7	1,5 mA USB Port	USB Type A port for mouse or keyboard, or personal mobile device.
8	0.5 mA USB Port	USB Type A port for mouse or keyboard.

Setup

Figure 35 Workstation Cradle Setup

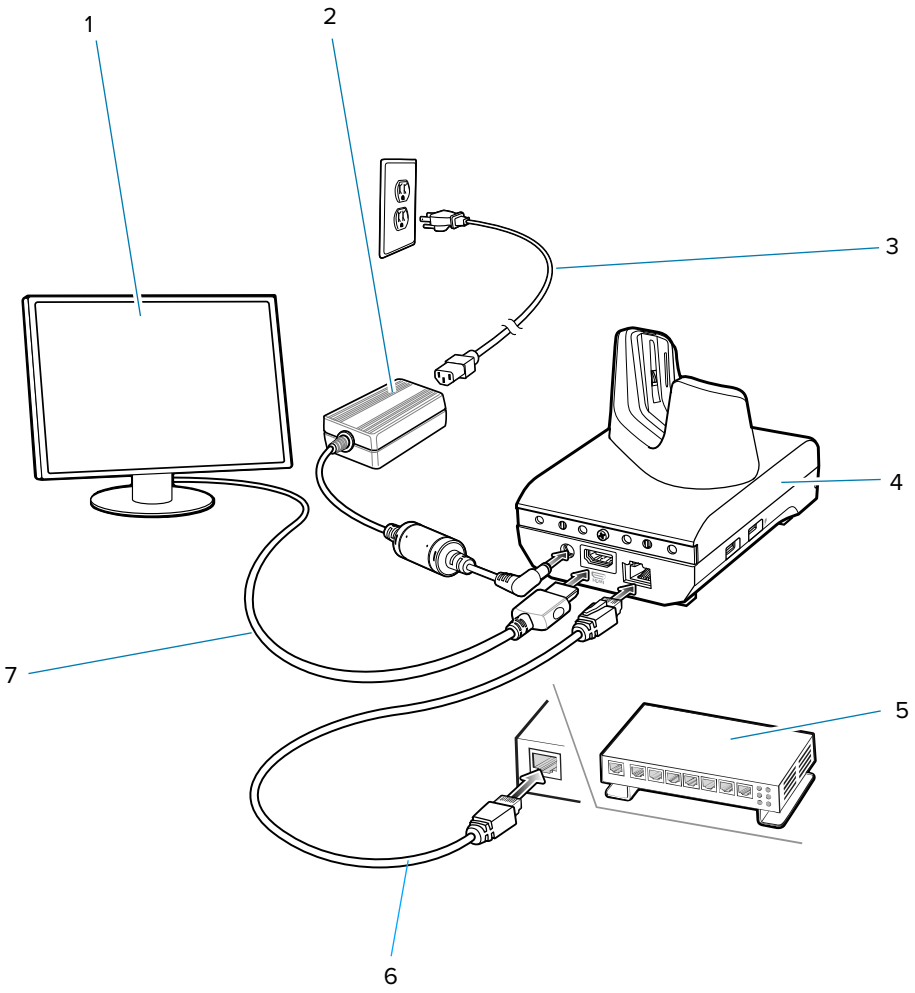

1	Monitor
2	Power supply
3	AC line cord
4	Cradle
5	Ethernet switch
6	Ethernet cable
7	HDMI cable

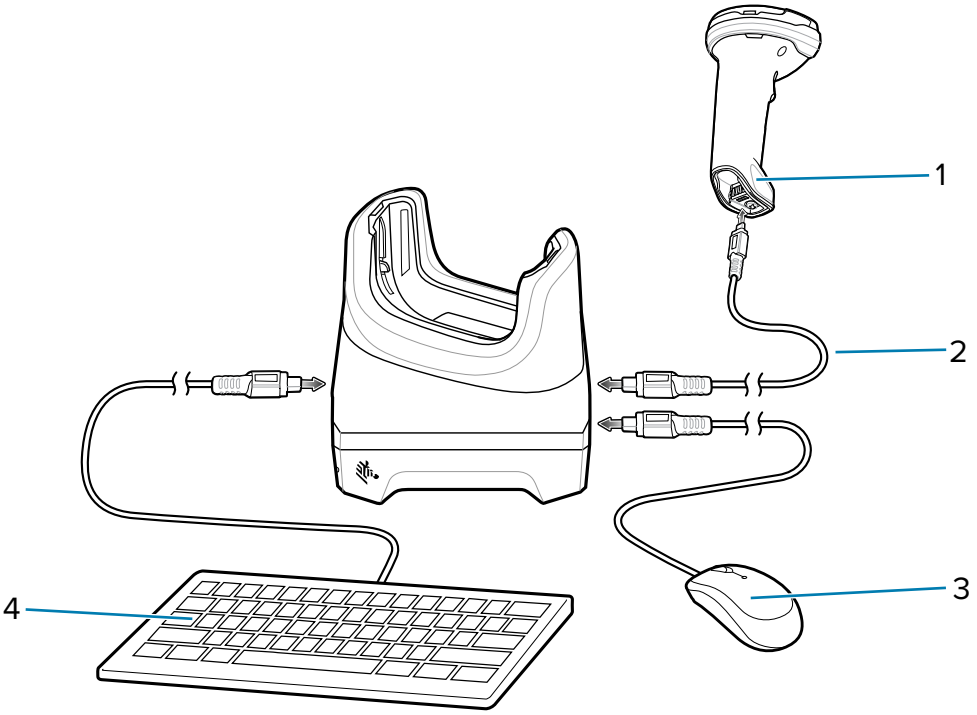

1	USB scanner
2	USB cable
3	USB mouse
4	USB keyboard

Ethernet Settings

The following settings can be configured when using Ethernet communication:

- Proxy Settings
- Static IP.

Configuring Ethernet Proxy Settings

The device includes Ethernet cradle drivers. After inserting the device, configure the Ethernet connection.

1. Swipe down from the Status bar to open the Quick Settings bar and then touch ⚙.
2. Touch **Ethernet**.
3. Slide the switch to the **ON** position.
4. Place the device into the Ethernet cradle slot.
5. Touch and hold eth0 until the menu appears.
6. Touch **Modify Proxy**.
7. Touch the **Proxy** drop-down list and select **Manual**.
8. In the **Proxy hostname** field, enter the proxy server address.

9. In the Proxy port field, enter the proxy server port number.

NOTE: When entering proxy addresses in the Bypass proxy for field, do not use spaces or carriage returns between addresses.

10. In the **Bypass proxy for** text box, enter addresses for web sites that do not require to go through the proxy server.
11. Use the separator “|” between addresses.
12. Touch **MODIFY**.
13. Touch the Home button.

Configuring Ethernet Static IP Address

The device includes Ethernet cradle drivers. After inserting the device, configure the Ethernet connection.

1. Swipe down from the Status bar to open the Quick Settings bar and then touch ⚙.
2. Touch Ethernet.
3. Slide the switch to the **ON** position.
4. Place the device into the Ethernet cradle slot.
5. Touch **eth0**.
6. Touch **Disconnect**.
7. Touch **eth0**.
8. Touch the **IP** settings drop-down list and select Static.
9. In the **IP address** field, enter the proxy server address.
10. If required, in the **Gateway** field, enter a gateway address for the device.
11. If required, in the **Netmask** field, enter the network mask address.
12. If required, in the **DNS** address fields, enter a Domain Name System (DNS) addresses.
13. Touch **CONNECT**.
14. Touch the Home button.

Scanner Setup

The workstation cradle only supports a USB scanner in Human Interface Device (HID) mode. Refer to the scanner Product Reference Guide for information on configuring the scanner to HID mode.

Security

The cradle provides a Kensington Slot to secure the cradle using a Kensington locking cable.

Figure 36 Securing Cradle with Kensington Lock

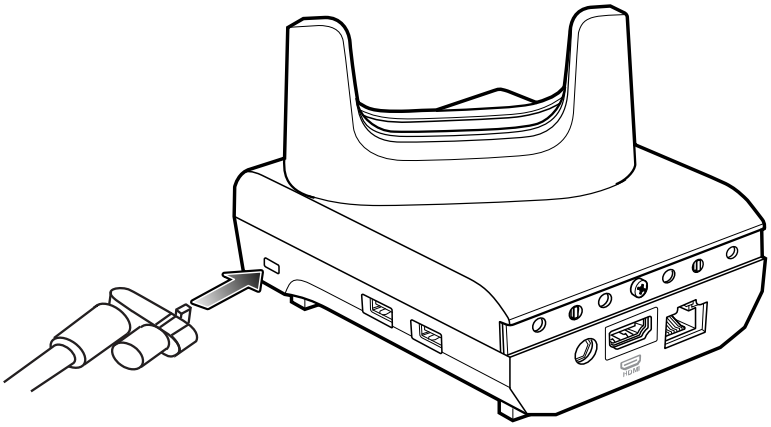

Using the Workstation Cradle

Provides steps to start using the workstation cradle.

1. Turn on the device.
2. Insert the device into the cradle.

   The device screen automatically rotates and mirrors on the connected monitor.

Changing Monitor Resolution

Screen resolution is automatically detected by the device when placed in the cradle. To manually change the external monitor screen resolution:

1. Go to **Settings** > **Display** > **External screen resolution**.
2. Select the a resolution for the attached monitor.
3. Insert the device into the cradle.

Charging the Device in the Cradle

To charge the device:

NOTE: If the device has a Rugged Boot, remove the cup insert before inserting the device.

IMPORTANT: By default, the device includes an interface connector. If the interface connector is removed for USB Type C cable connectivity, then it must be replaced before charging or receiving an Ethernet IP address if placed in a cradle.

1. Insert the device into the slot to begin charging.

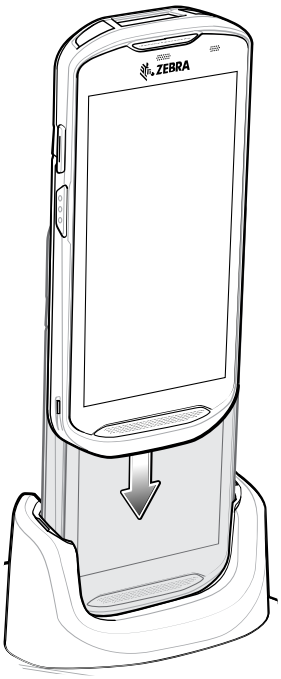

2. Ensure that the device is properly seated.

Inserting a TC5X with Rugged Boot into Cradle

Each cradle cup has an insert that must be removed prior to inserting the device with Rugged Boot. Remove the insert and then insert the device into the cup.

Figure 37 Remove the Insert from the Cup

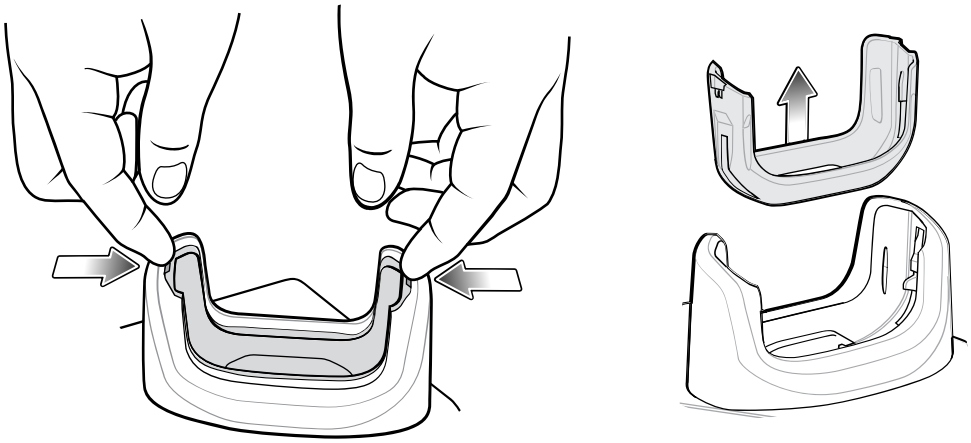

2-Slot USB/Ethernet Cradle

CAUTION: Ensure that you follow the guidelines for battery safety described in Battery Safety Guidelines.

The 2-Slot USB/Ethernet Cradle:

- Provides 5 VDC power for operating the device.
- Charges the device's battery.
- Charges a spare battery.
- Connects the device to an Ethernet network.
- Provides USB communication with host computer.

Figure 38 2-Slot USB/Ethernet Cradle

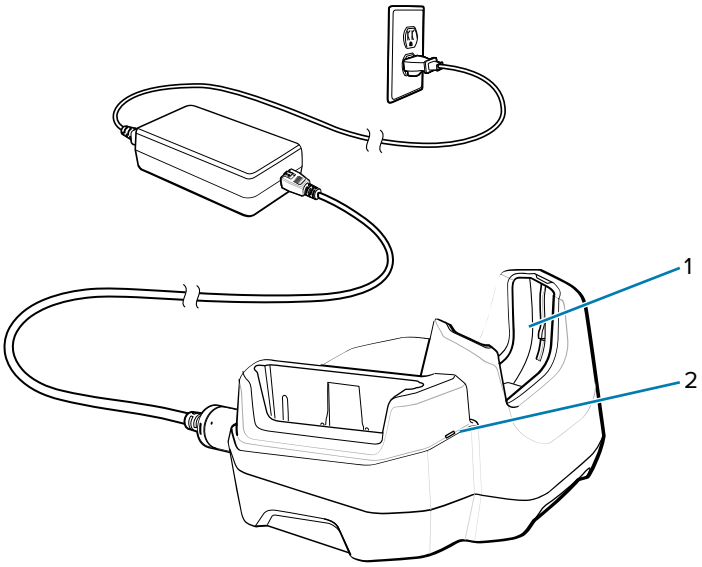

1	Cup insert
2	Spare battery charging LED

Setup

Figure 39 Setup

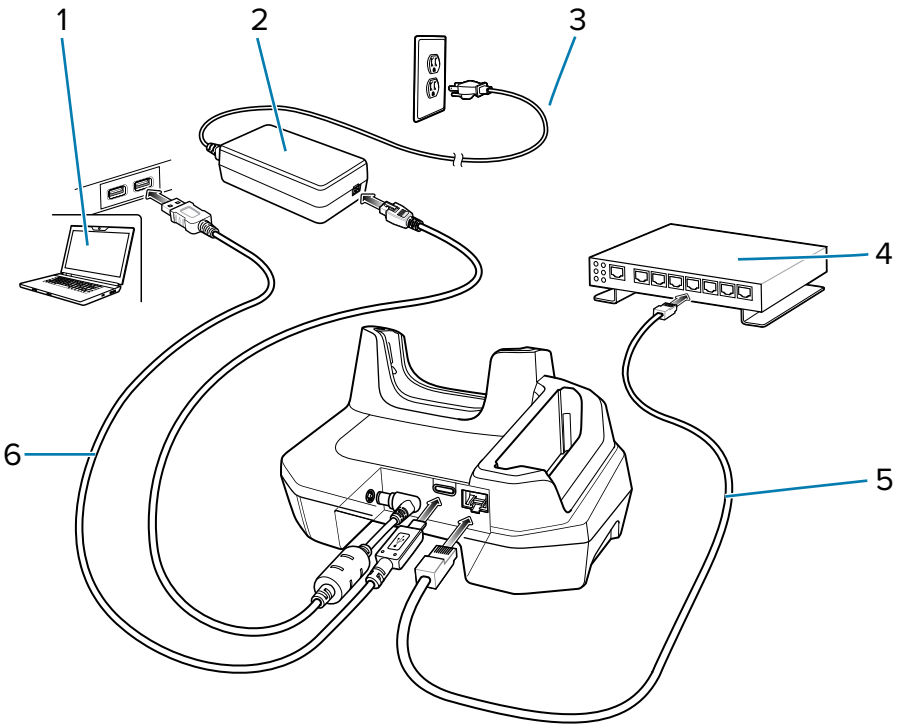

1	Host computer
2	Power supply
3	DC line cord
4	Ethernet switch
5	Ethernet cable
6	USB cable

Ethernet Settings

The following settings can be configured when using Ethernet communication:

- Proxy Settings
- Static IP.

Configuring Ethernet Proxy Settings

The device includes Ethernet cradle drivers. After inserting the device, configure the Ethernet connection.

1. Swipe down from the Status bar to open the Quick Settings bar and then touch ⚙.
2. Touch **Ethernet**.

3. Slide the switch to the **ON** position.
4. Place the device into the Ethernet cradle slot.
5. Touch and hold eth0 until the menu appears.
6. Touch **Modify Proxy**.
7. Touch the **Proxy** drop-down list and select **Manual**.
8. In the **Proxy hostname** field, enter the proxy server address.
9. In the Proxy port field, enter the proxy server port number.

NOTE: When entering proxy addresses in the Bypass proxy for field, do not use spaces or carriage returns between addresses.

10. In the **Bypass proxy for** text box, enter addresses for web sites that do not require to go through the proxy server.
11. Use the separator “|” between addresses.
12. Touch **MODIFY**.
13. Touch the Home button.

Configuring Ethernet Static IP Address

The device includes Ethernet cradle drivers. After inserting the device, configure the Ethernet connection.

1. Swipe down from the Status bar to open the Quick Settings bar and then touch ⚙.
2. Touch Ethernet.
3. Slide the switch to the **ON** position.
4. Place the device into the Ethernet cradle slot.
5. Touch **eth0**.
6. Touch **Disconnect**.
7. Touch **eth0**.
8. Touch the **IP** settings drop-down list and select Static.
9. In the **IP address** field, enter the proxy server address.
10. If required, in the **Gateway** field, enter a gateway address for the device.
11. If required, in the **Netmask** field, enter the network mask address.
12. If required, in the **DNS** address fields, enter a Domain Name System (DNS) addresses.
13. Touch **CONNECT**.
14. Touch the Home button.

Battery Charging

1. Insert the battery into the right slot to begin charging.

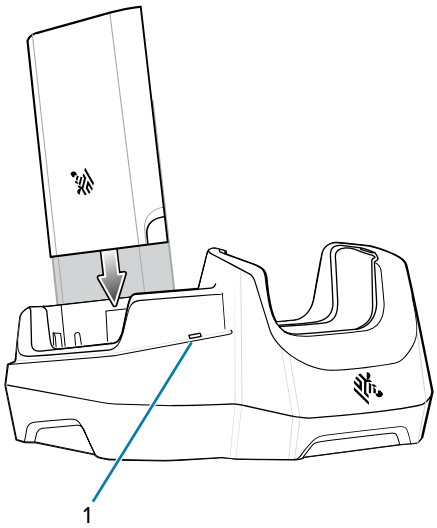

1	Spare battery charging LED

2. Ensure that the battery is seated properly.

USB/Ethernet Communication

The 2–Slot USB/Ethernet Cradle provides both Ethernet communication with a network and USB communication with a host computer. Prior to using the cradle for Ethernet or USB communication. Ensure that the switch on the USB/Ethernet module is set properly.

Turn the cradle over to view the switch.

Figure 40 2-Slot USB/Ethernet Cradle Switch

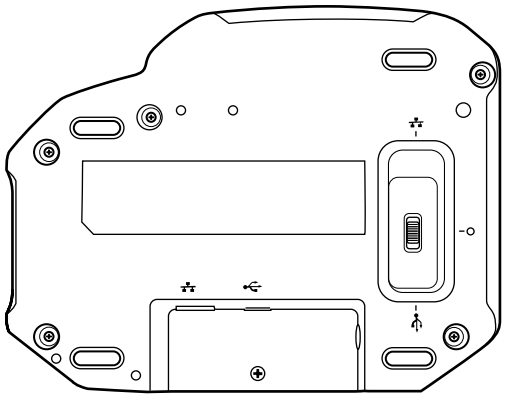

For Ethernet communication, slide the switch to the position.

For USB communication, slide the switch to the position.

Place the switch in the center position to disable communications.

Ethernet LED Indicators

There are two LEDs on the Ethernet RJ-45 connector. The green LED lights to indicate that the transfer rate is 100 Mbps. When the LED is not lit the transfer rate is 10 Mbps. The yellow LED blinks to indicate activity, or stays lit to indicate that a link is established. When it is not lit it indicates that there is no link.

Figure 41 Ethernet LED Indicators

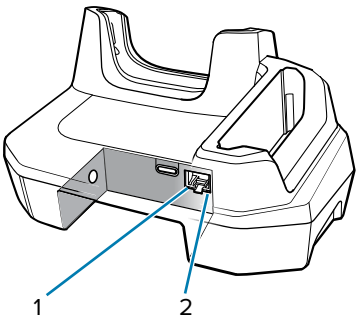

1	Yellow LED
2	Green LED

Table 24 USB/Ethernet LED Data Rate Indicators

Data Rate	Yellow LED	Green LED
100 Mbp	On/Blink	On
10 Mbps	On/Blink	Off

Establishing Ethernet Connection

1. Swipe down with two fingers from the status bar to open the quick access panel and then touch ⚙.
2. Touch Ethernet.
3. Slide the Ethernet switch to the **ON** position.
4. Insert the device into a slot. The icon appears in the Status bar.
5. Touch **Eth0** to view Ethernet connection details.

Inserting a TC5X with Rugged Boot into Cradle

Each cradle cup has an insert that must be removed prior to inserting the device with Rugged Boot. Remove the insert and then insert the device into the cup.

Figure 42 Remove the Insert from the Cup

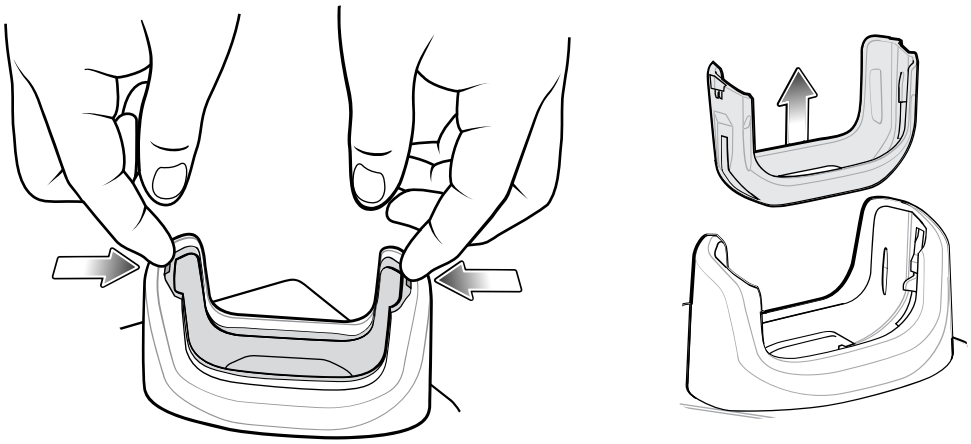

Charging the Device in the Cradle

To charge the device:

NOTE: If the device has a Rugged Boot, remove the cup insert before inserting the device.

IMPORTANT: By default, the device includes an interface connector. If the interface connector is removed for USB Type C cable connectivity, then it must be replaced before charging or receiving an Ethernet IP address if placed in a cradle.

1. Insert the device into the slot to begin charging.

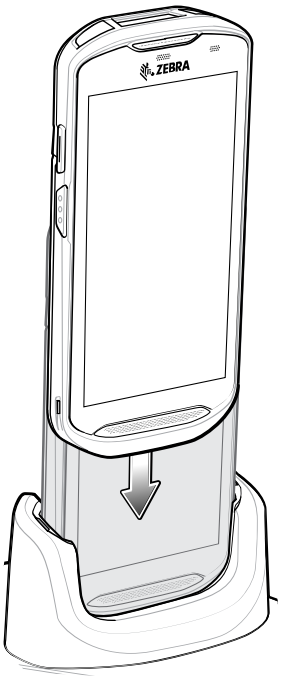

2. Ensure that the device is properly seated.

4-Slot Charge Only Cradle with Battery Charger

CAUTION: : Ensure that you follow the guidelines for battery safety described in Battery Safety Guidelines.

The 4-Slot Charge Only Cradle with Battery Charger:

- Provides 5 VDC power for operating the device.
- Simultaneously charges up to four devices and up to four spare batteries using the Battery Charger Adapter.

Figure 43 4-Slot Charge Only Cradle with Battery Charger

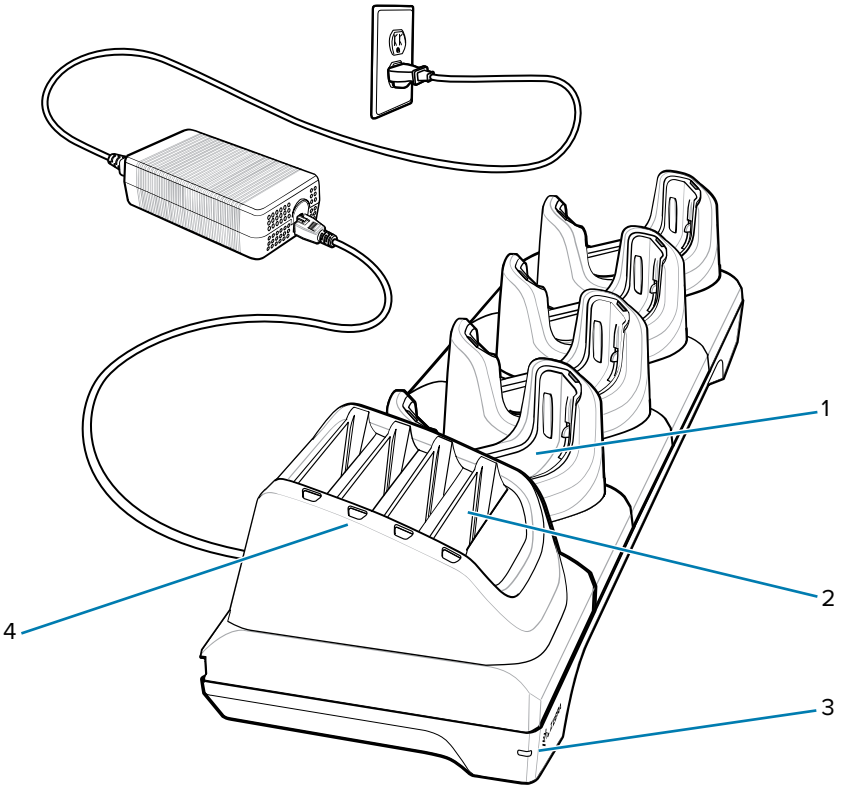

1	Charging slot
2	Spare battery slot
3	Power LED
4	Spare battery charging LED

Setup

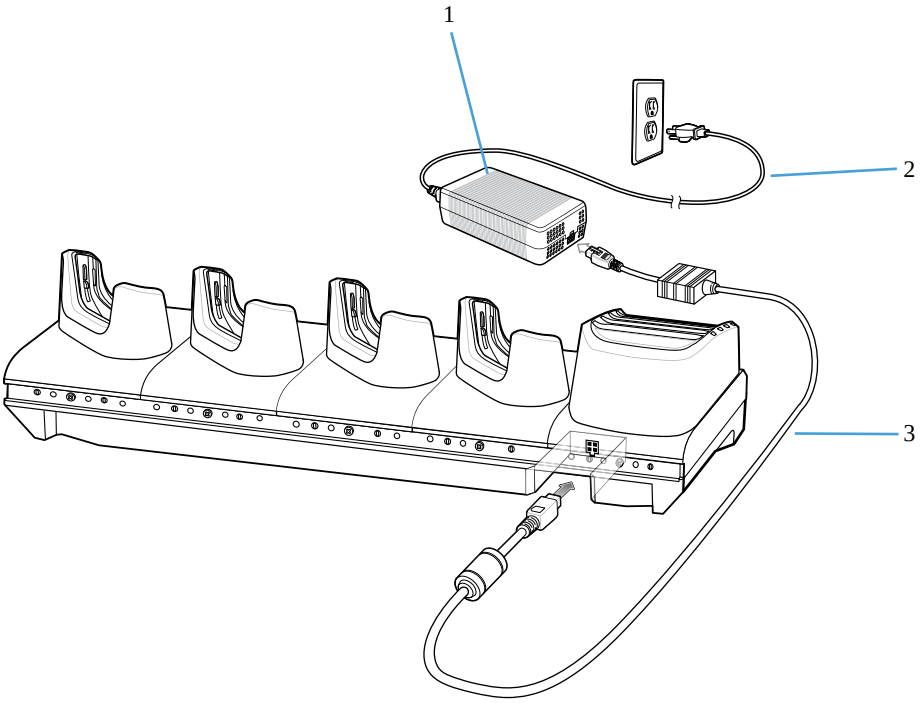

1	Power supply
2	AC line cord
3	DC line cord

Charging the Device in the Cradle

To charge the device:

NOTE: If the device has a Rugged Boot, remove the cup insert before inserting the device.

IMPORTANT: By default, the device includes an interface connector. If the interface connector is removed for USB Type C cable connectivity, then it must be replaced before charging or receiving an Ethernet IP address if placed in a cradle.

1. Insert the device into the slot to begin charging.

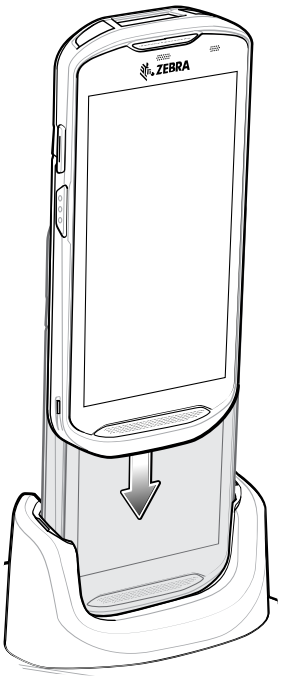

2. Ensure that the device is properly seated.

Inserting a TC5X with Rugged Boot into Cradle

Each cradle cup has an insert that must be removed prior to inserting the device with Rugged Boot. Remove the insert and then insert the device into the cup.

Figure 44 Remove the Insert from the Cup

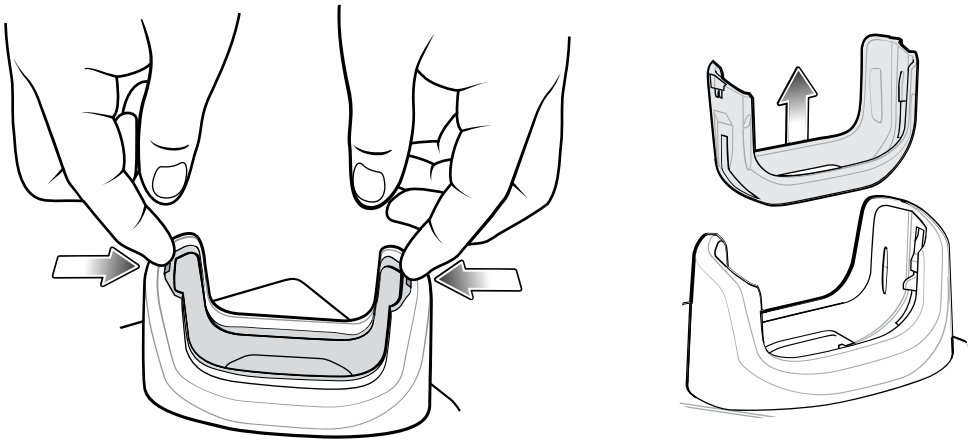

5-Slot Charge Only Cradle

CAUTION: Ensure that you follow the guidelines for battery safety described in Battery Safety Guidelines.

The 5-Slot Charge Only Cradle:

- Provides 5 VDC power for operating the device.
- Simultaneously charges up to five devices.

Figure 45 5-Slot Charge Only Cradle

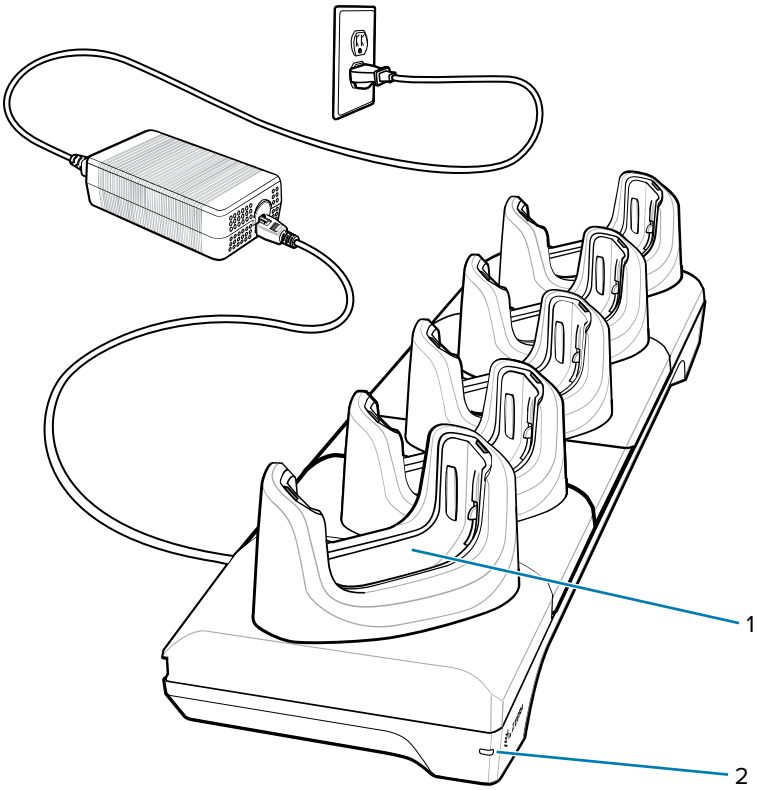

1	Charging slot
2	Power LED

Setup

Figure 46 5-Slot Charge Only Cradle Setup

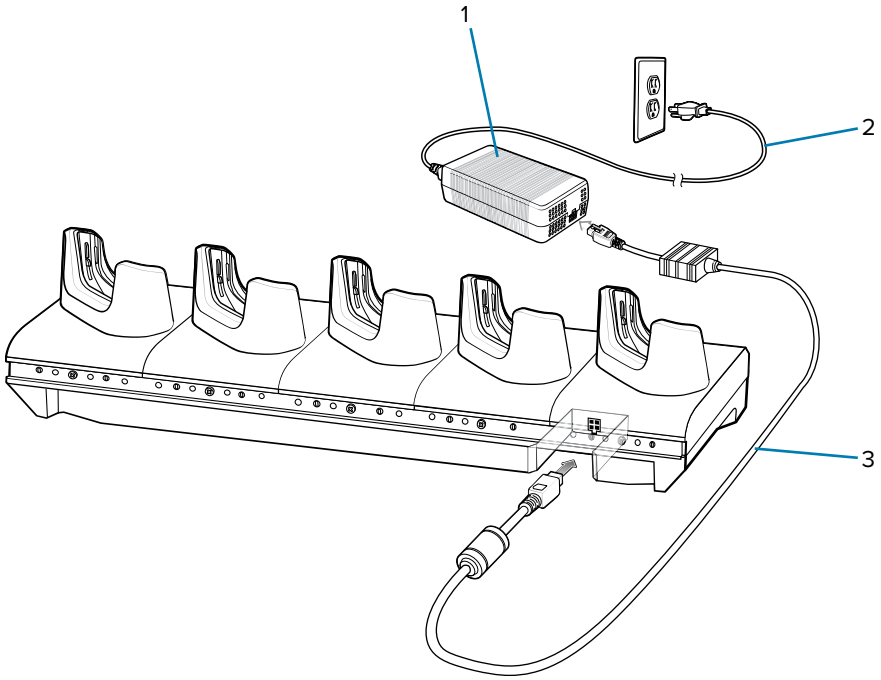

1	Power supply
2	AC line cord
3	DC line cord

Charging the Device in the Cradle

To charge the device:

NOTE: If the device has a Rugged Boot, remove the cup insert before inserting the device.

IMPORTANT: By default, the device includes an interface connector. If the interface connector is removed for USB Type C cable connectivity, then it must be replaced before charging or receiving an Ethernet IP address if placed in a cradle.

1. Insert the device into the slot to begin charging.

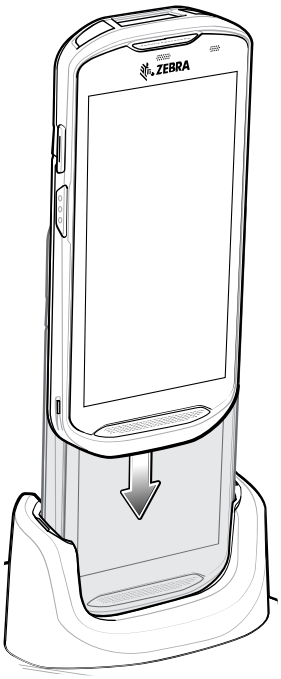

2. Ensure that the device is properly seated.

Inserting a TC5X with Rugged Boot into Cradle

Each cradle cup has an insert that must be removed prior to inserting the device with Rugged Boot. Remove the insert and then insert the device into the cup.

Figure 47 Remove the Insert from the Cup

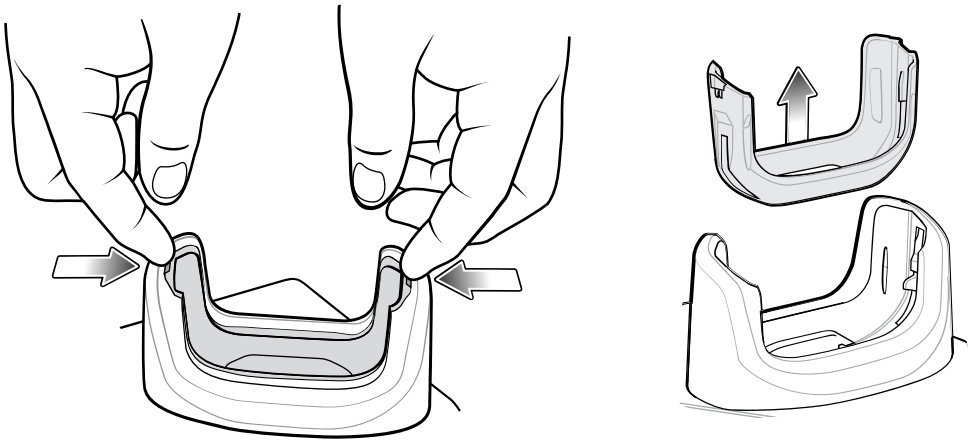

5-Slot Ethernet Cradle

CAUTION: Ensure that you follow the guidelines for battery safety described in Battery Safety Guidelines.

The 5-Slot Ethernet Cradle:

- Provides 5 VDC power for operating the device.
- Connects the device (up to five) to an Ethernet network.
- Simultaneously charges up to five devices.

Figure 48 5-Slot Ethernet Cradle

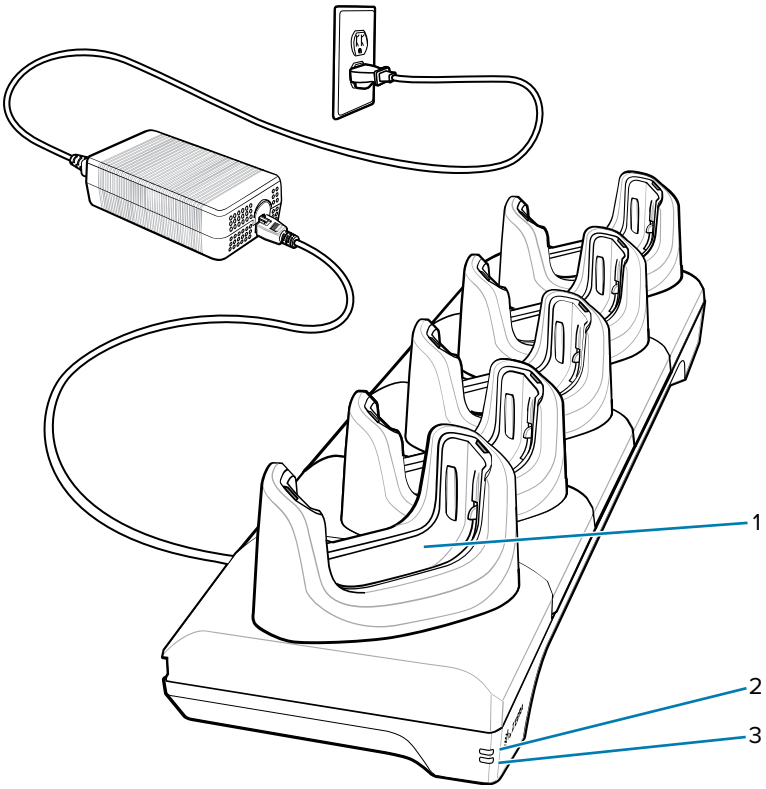

1	Charging slot
2	1000 LED
3	10/100 LED

Setup

Figure 49 5-Slot Ethernet Cradle Setup

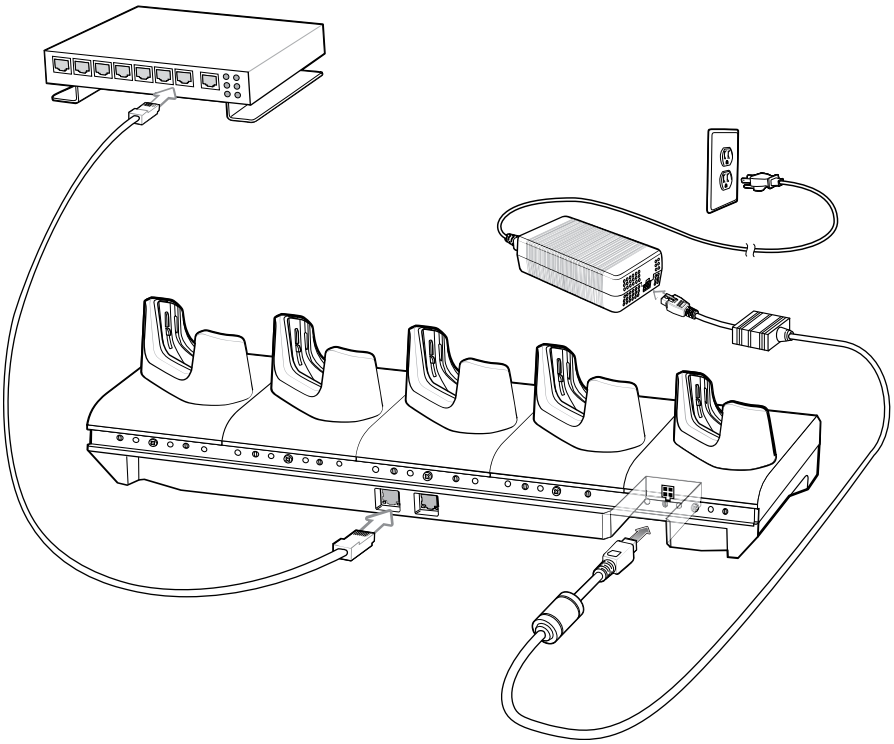

Daisy-chaining Ethernet Cradles

Daisy-chain up to ten 5-Slot Ethernet cradles to connect several cradles to an Ethernet network. Use either a straight or crossover cable. Daisy-chaining should not be attempted when the main Ethernet connection to the first cradle is 10 Mbps as throughput issues will almost certainly result.

To daisy-chain 5-Slot Ethernet cradles:

1. Connect power to each 5-Slot Ethernet cradle.
2. Connect an Ethernet cable to one of the ports on the switch and the other end to the to Primary Port of the first cradle.
3. Connect an Ethernet cable to the Secondary port of the first cradle.

4. Connect the other end of the Ethernet cable to the Primary port of the next 5-Slot Ethernet cradle.

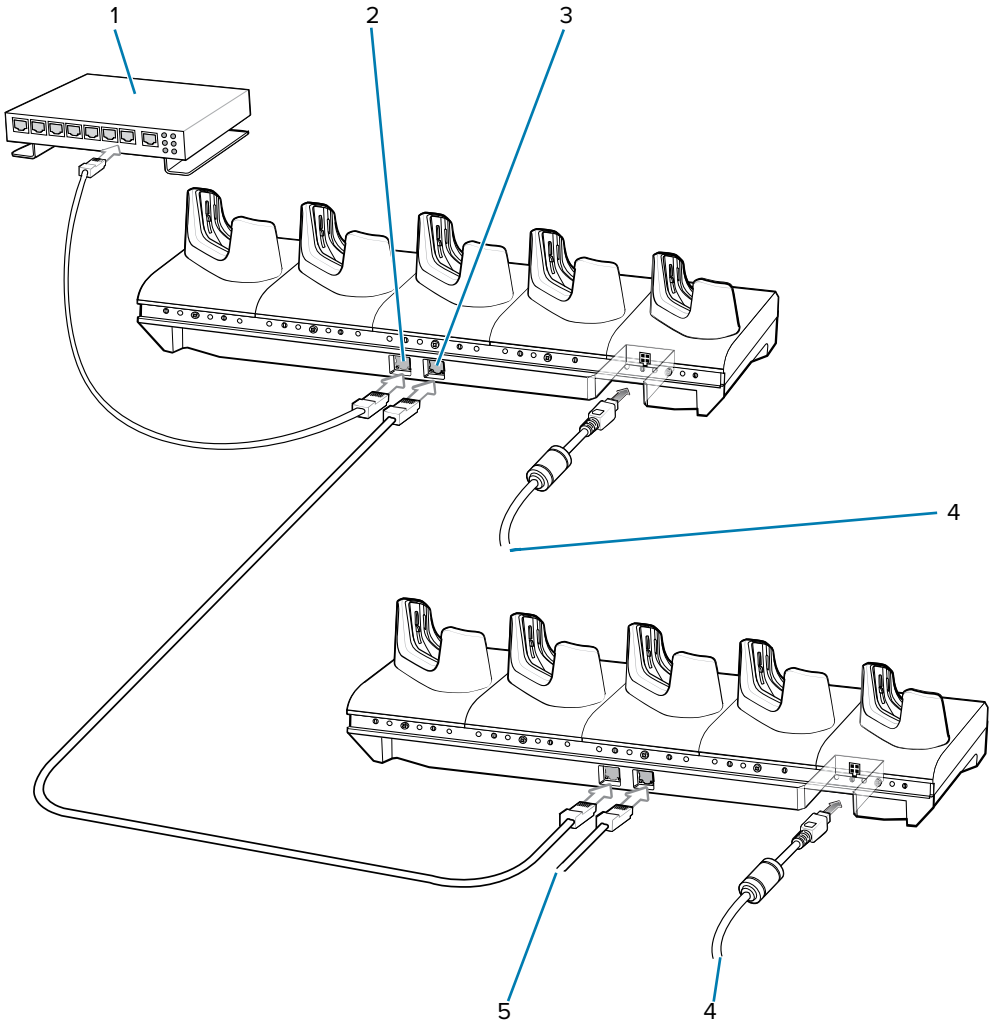

1	Primary port
2	Secondary port
3	To power supply
4	To next cradle
5	Ethernet switch

5. Connect additional cradles as described in step 3 and 4.

Ethernet Settings

The following settings can be configured when using Ethernet communication:

- Proxy Settings
- Static IP.

Configuring Ethernet Proxy Settings

The device includes Ethernet cradle drivers. After inserting the device, configure the Ethernet connection.

1. Swipe down from the Status bar to open the Quick Settings bar and then touch ⚙.
2. Touch **Ethernet**.
3. Slide the switch to the **ON** position.
4. Place the device into the Ethernet cradle slot.
5. Touch and hold eth0 until the menu appears.
6. Touch **Modify Proxy**.
7. Touch the **Proxy** drop-down list and select **Manual**.
8. In the **Proxy hostname** field, enter the proxy server address.
9. In the Proxy port field, enter the proxy server port number.

NOTE: When entering proxy addresses in the Bypass proxy for field, do not use spaces or carriage returns between addresses.

10. In the **Bypass proxy for** text box, enter addresses for web sites that do not require to go through the proxy server.
11. Use the separator “|” between addresses.
12. Touch **MODIFY**.
13. Touch the Home button.

Configuring Ethernet Static IP Address

The device includes Ethernet cradle drivers. After inserting the device, configure the Ethernet connection.

1. Swipe down from the Status bar to open the Quick Settings bar and then touch ⚙.
2. Touch Ethernet.
3. Slide the switch to the **ON** position.
4. Place the device into the Ethernet cradle slot.
5. Touch **eth0**.
6. Touch **Disconnect**.
7. Touch **eth0**.
8. Touch the **IP** settings drop-down list and select Static.
9. In the **IP address** field, enter the proxy server address.
10. If required, in the **Gateway** field, enter a gateway address for the device.
11. If required, in the **Netmask** field, enter the network mask address.
12. If required, in the **DNS** address fields, enter a Domain Name System (DNS) addresses.
13. Touch **CONNECT**.
14. Touch the Home button.

Charging the Device in the Cradle

To charge the device:

NOTE: If the device has a Rugged Boot, remove the cup insert before inserting the device.

IMPORTANT: By default, the device includes an interface connector. If the interface connector is removed for USB Type C cable connectivity, then it must be replaced before charging or receiving an Ethernet IP address if placed in a cradle.

1. Insert the device into the slot to begin charging.

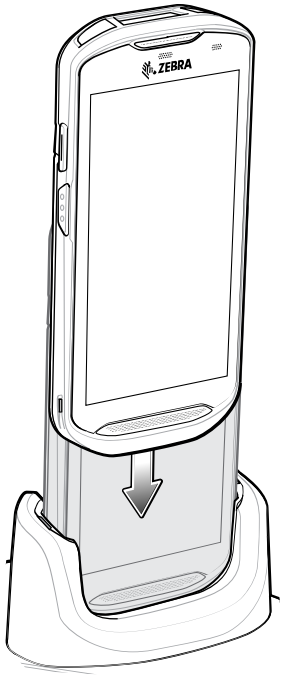

2. Ensure that the device is properly seated.

Inserting a TC5X with Rugged Boot into Cradle

Each cradle cup has an insert that must be removed prior to inserting the device with Rugged Boot. Remove the insert and then insert the device into the cup.

Figure 50 Remove the Insert from the Cup

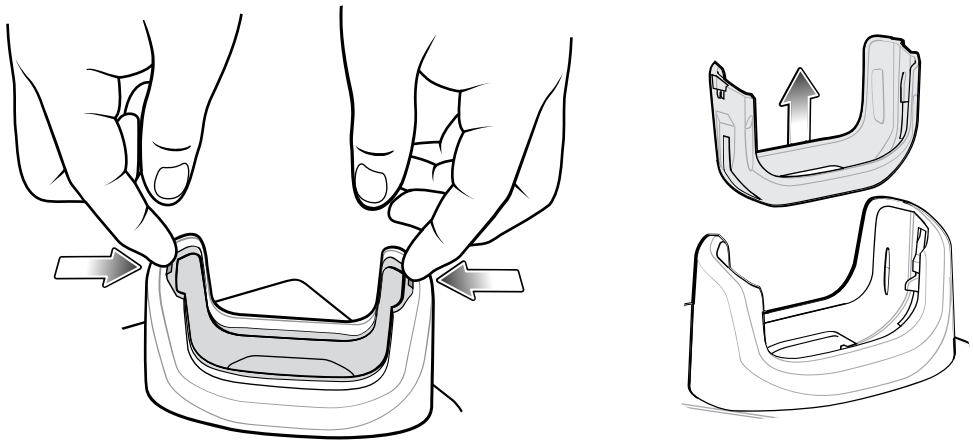

Establishing Ethernet Connection

1. Swipe down with two fingers from the status bar to open the quick access panel and then touch ⚙.
2. Touch Ethernet.
3. Slide the Ethernet switch to the **ON** position.
4. Insert the device into a slot. The icon appears in the Status bar.
5. Touch **Eth0** to view Ethernet connection details.

LED Indicators

There are two green LEDs on the side of the cradle. These green LEDs light and blink to indicate the data transfer rate.

Table 25 LED Data Rate Indicators

Data Rate	1000 LED	100/10 LED
1 Gbps	On/Blink	Off
100 Mbps	Off	On/Blink
10 Mbps	Off	On/Blink

4-Slot Battery Charger

CAUTION: Ensure that you follow the guidelines for battery safety described in Battery Safety Guidelines.

Figure 51 4-Slot Battery Charger

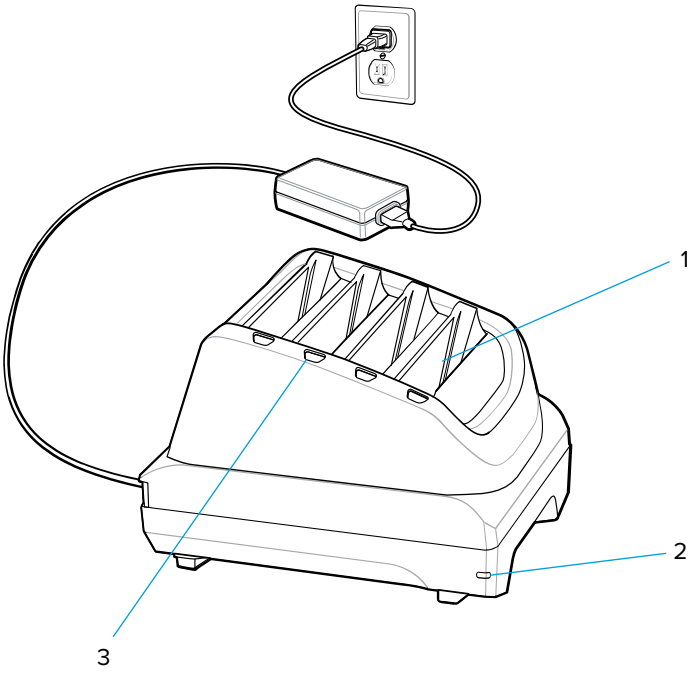

1	Battery slot
2	Power LED
3	Battery charge LED

Single Charger Setup

1. Plug the power supply plug into the power port on the back of the charger.
2. Plug the AC line cord into the power supply.

3. Plug the AC line cord into an AC outlet.

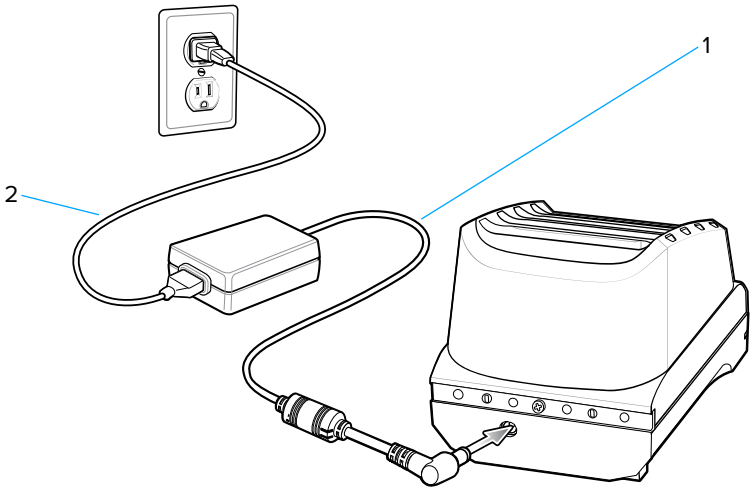

1	Power supply
2	AC line cord

Two Charger Setup

1. Plug the 2-way DC Cable plugs into the power port on the back of each charger.
2. Plug the 2-way DC Cable connector into the power output of the power supply (PWR-BGA12V108W0WW).
3. Plug the AC line cord into the power supply.

4. Plug the AC line cord into an AC outlet.

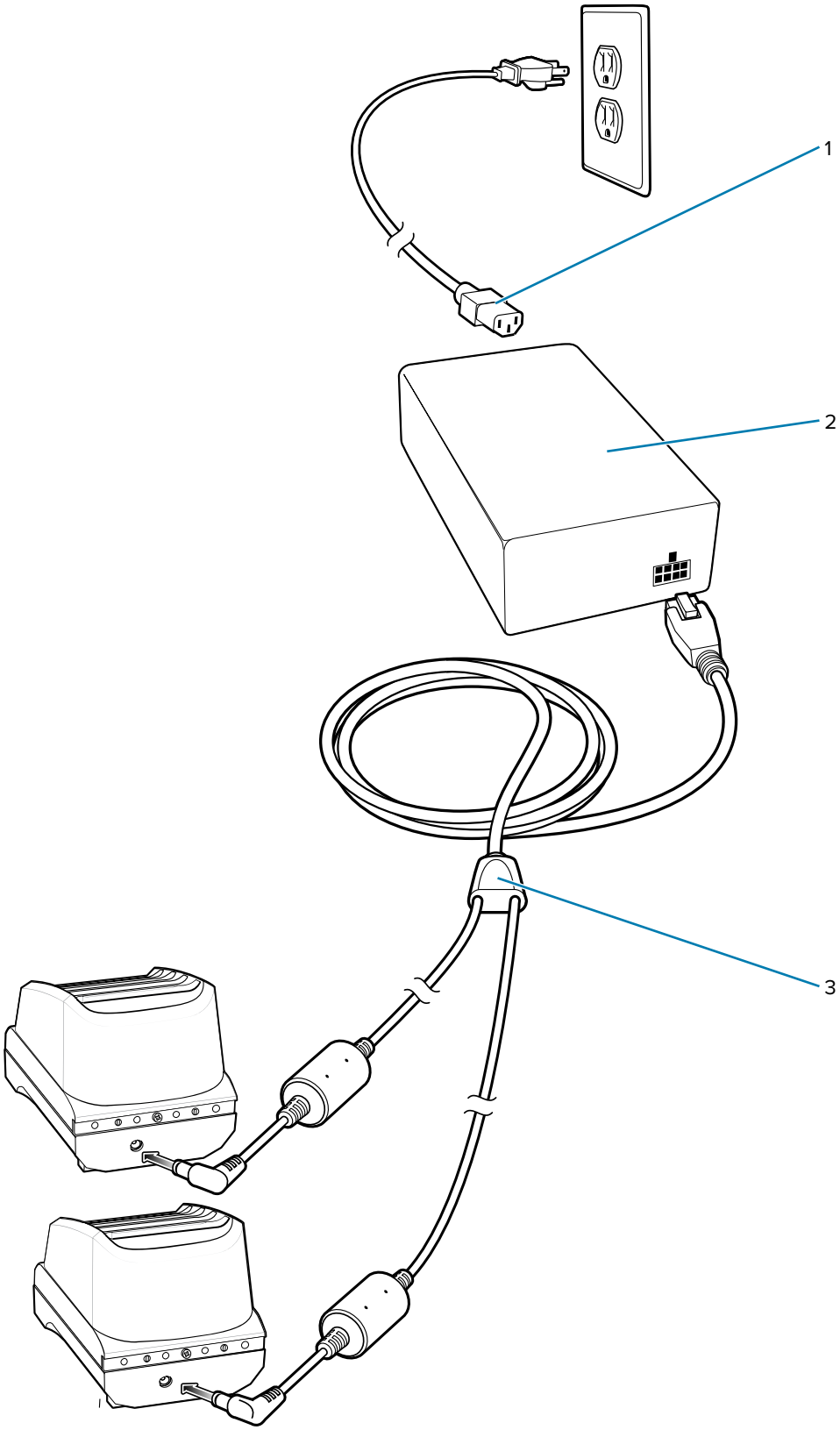

1	AC line cord
2	Power supply
3	2-way DC cable

Charging Spare Batteries

1. Connect the charger to a power source.
2. Insert the battery into a battery charging well and gently press down on the battery to ensure proper contact.

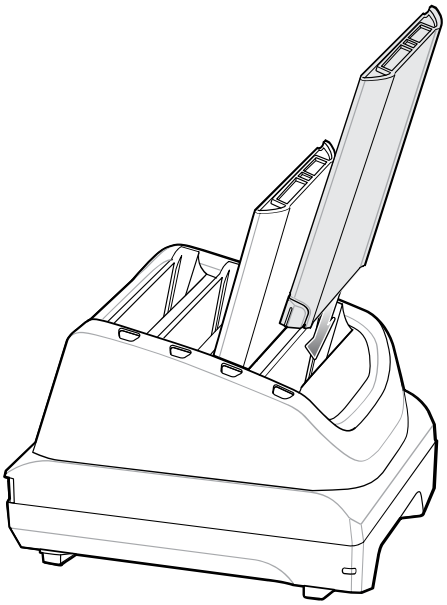

Each Battery Charging LED indicates the status of the battery charging in each slot. See Spare Battery Charging for spare battery charging indicator descriptions.

Rugged Boot

The Rugged Boot provides additional protection for the device.

Installation

To install the Rugged Boot:

1. Insert the bottom of the device into the bottom of the boot.

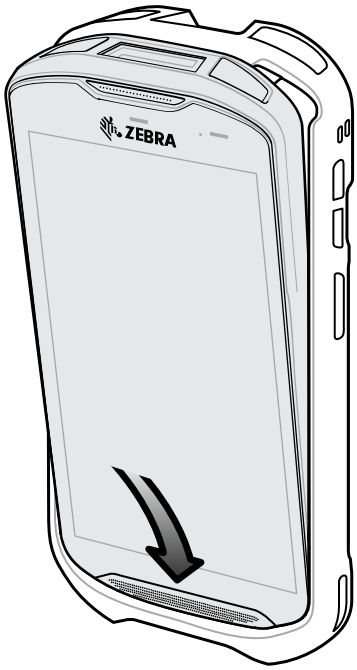

2. Lift the top of the Rugged Boot over the top of the device.

3. Push the device into the Rugged Boot.

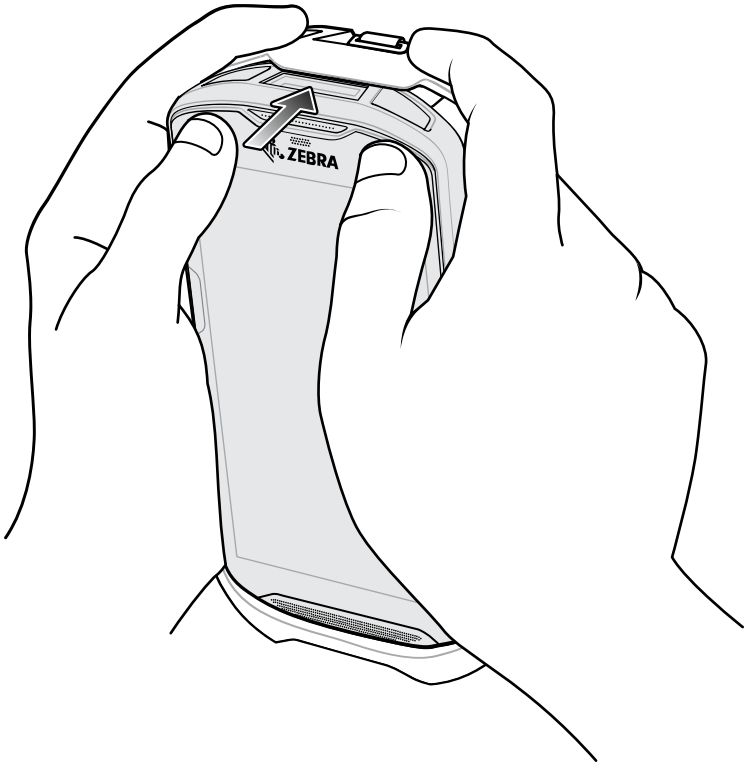

Installing Plastic Stylus

To install the optional plastic stylus:

1. Insert one of the loop ends of the tether through the hole in the stylus.
2. Feed the tether through the loop.
3. Pull the tether until the loop tightens.

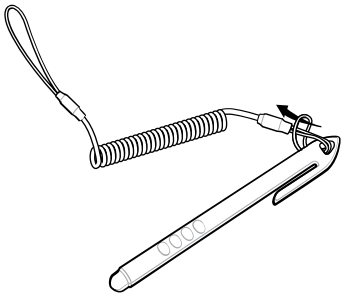

4. Insert the loop into the hand strap holder.

5. Feed the stylus through the loop.

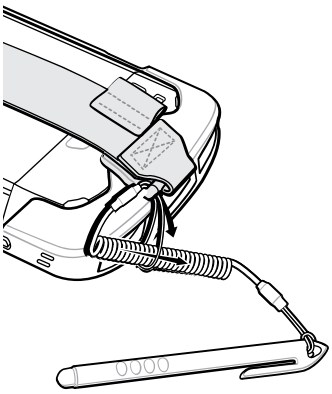

Charging with Cradles

Before inserting the device with the Rugged Boot into the cradle cup, remove the insert from the cup.

1. Using index fingers on both hands, push the insert toward the center of the cup.
2. Lift insert out of cup.

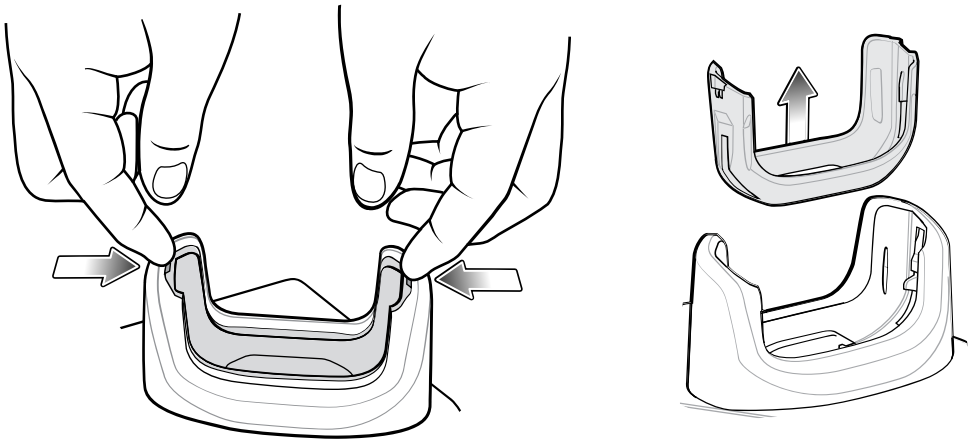

3. Insert the device into the cradle.

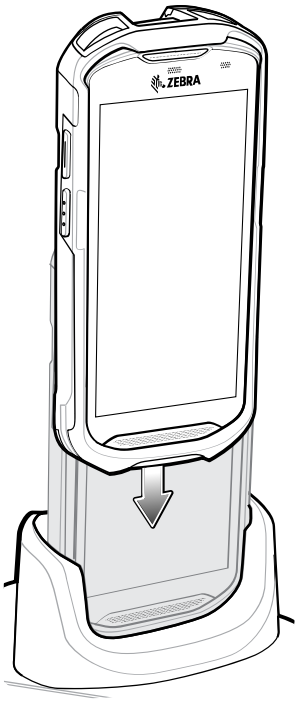

Basic Hand Strap Kit

Use to Basic Hand Strap Kit to add a hand strap to the device.

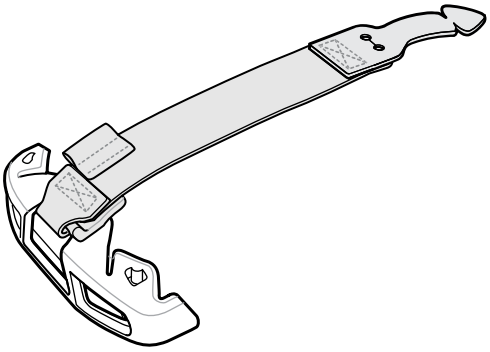

Installation

To install the Basic Hand Strap Kit:

1. Remove the two rubber plugs on the back of the device.

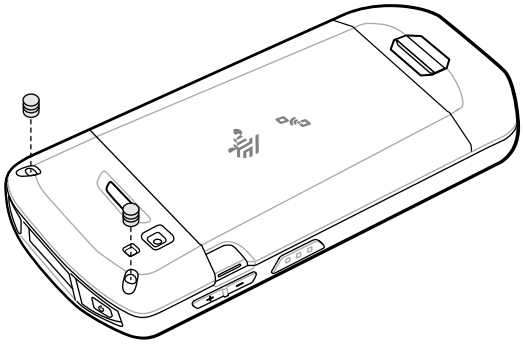

2. Align the top cap onto the device.
3. Rotate the top cap over the top of the device.

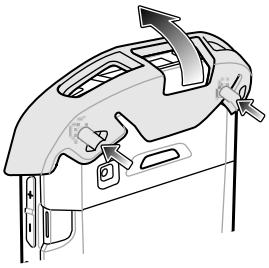

4. Insert the tab end of the hand strap into the slot on the device.

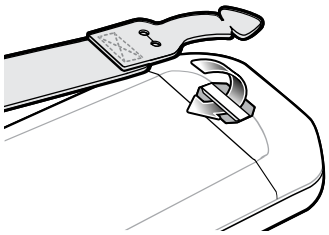

5. Feed the tab into the cut in the strap.

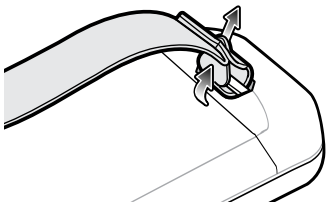

6. Align the hand strap clip with the top cap.

7. Push the clip onto the top cap.

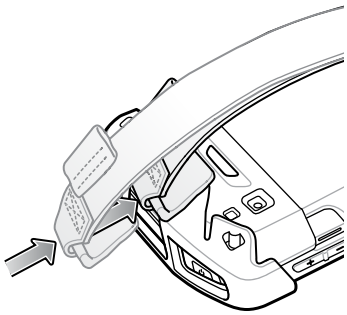

Removal

To remove the Basic Hand Strap Kit:

1. Using thumbs, push the top cap up and rotate over the top of the device.

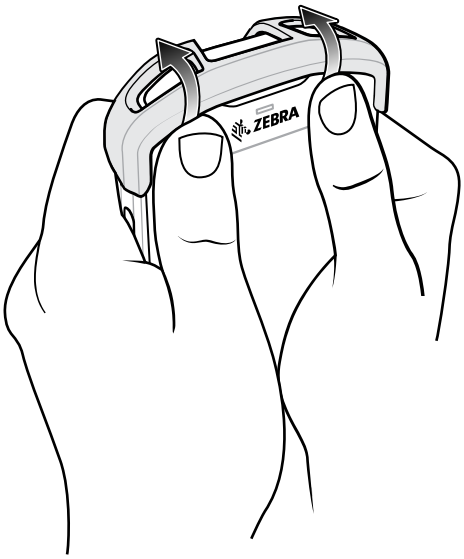

2. Pull the strap tab through the cut slot.
3. Pull the Hand Strap tab through the slot in the device.

2.5 mm Audio Adapter

The 2.5 mm Audio Adapter plugs into the device and connects to a wired headset with a 2.5 mm plug.

NOTE: The Audio Adapter is available for the device standard configuration.

To attach a 2.5 mm headset:

1. Open the headset jack cover.

2. Insert the 2.5 mm Audio Adapter plug into the headset jack.

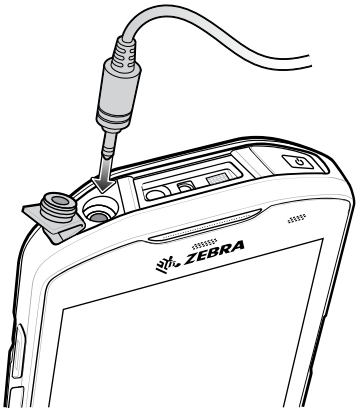

3. Insert the 2.5 mm headset plug into the jack on the Audio Adapter.

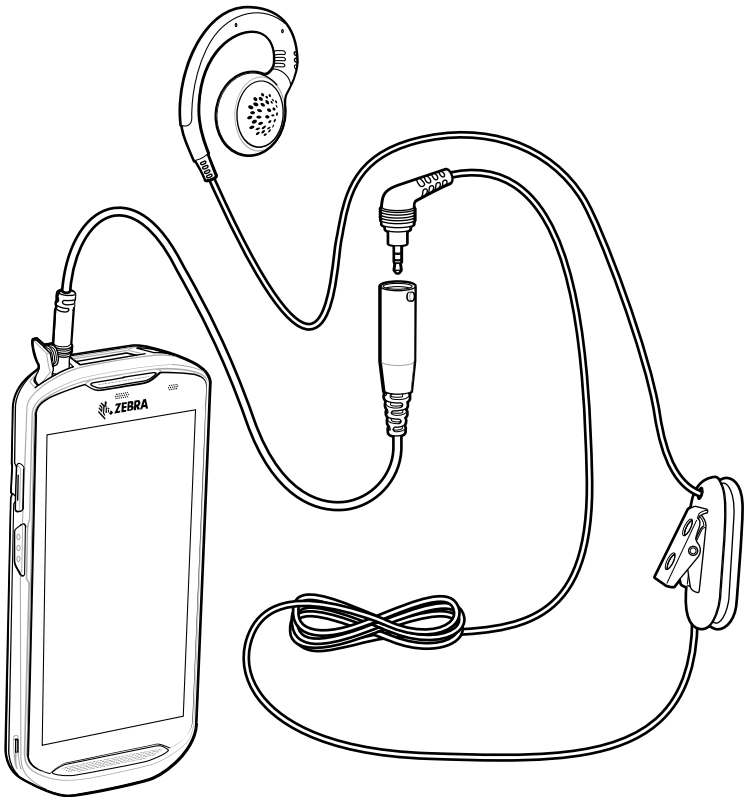

CAUTION: After removing headset, headset jack cover must be replaced and securely seated to ensure proper device sealing.

3.5 mm Audio Adapter

The 3.5 mm Audio Adapter plugs into the device and connects to a wired headset with a 3.5 mm plug.

NOTE: The Audio Adapter is available for the device standard configuration.

To attach a 3.5 mm headset:

1. Open the headset jack cover.
2. Insert the 3.5 mm Audio Adapter plug into the headset jack.

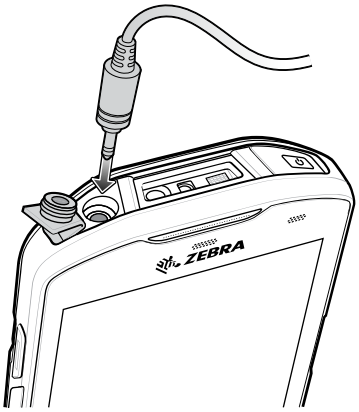

3. Connect the 3.5 mm connector plug of the headset into the 3.5 mm Audio Adapter.

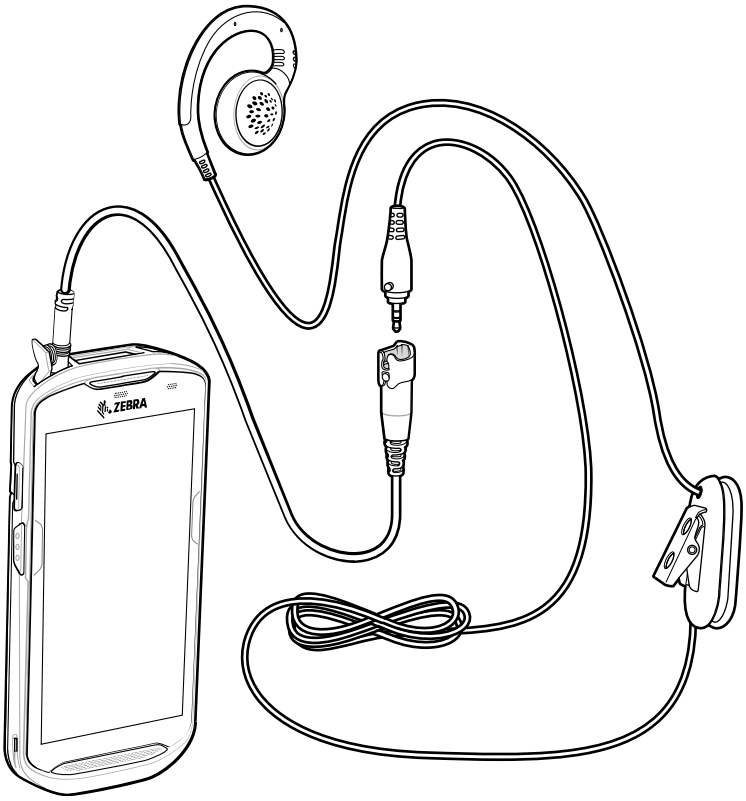

CAUTION: After removing headset, headset jack cover must be replaced and securely seated to ensure proper device sealing.

Rugged Charge/USB Cable

The Rugged Charge/USB Cable snaps onto the bottom of the device and removes easily when not in use. When attached to the device allows charging and allows the device to transfer data to a host computer.

Figure 52 Rugged Charge/USB Cable

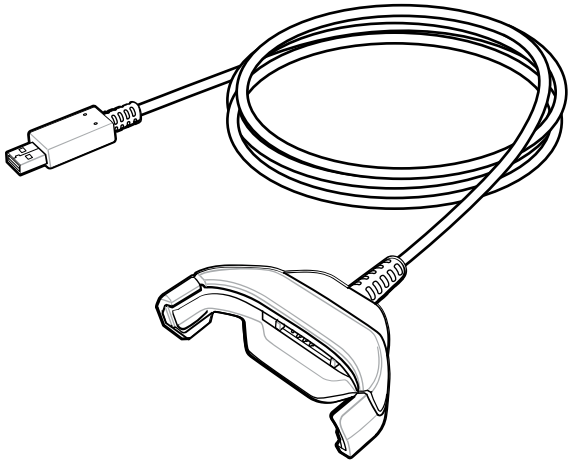

Connecting Rugged Charge/USB Cable to Device

1. Insert the device at an angle into the cable cup until the device touches the bottom of the cup.

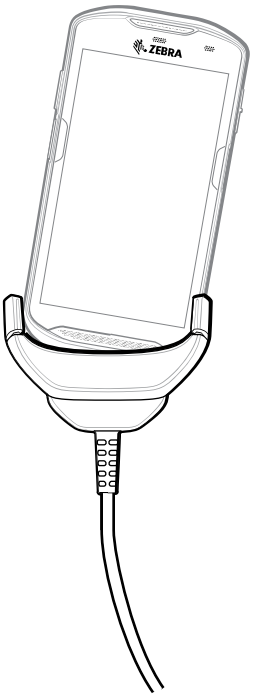

2. Rotate the device into the cup.

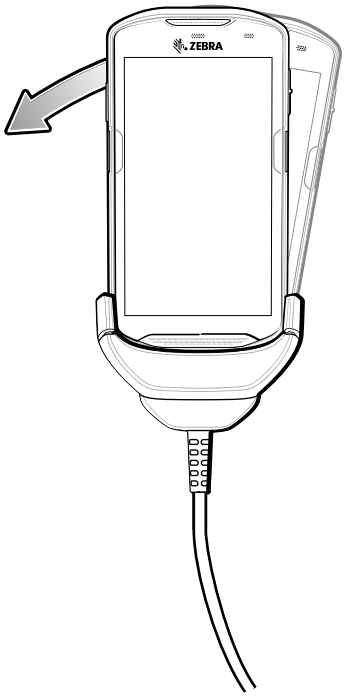

Connecting to TC5X with Rugged Boot

To connect the Rugged Charge/USB Cable to a device with a Rugged Boot:

1. Using thumb and index finger, squeeze the sides of the cup in.

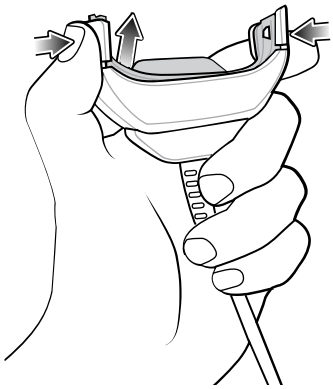

2. Lift inert out of cup.

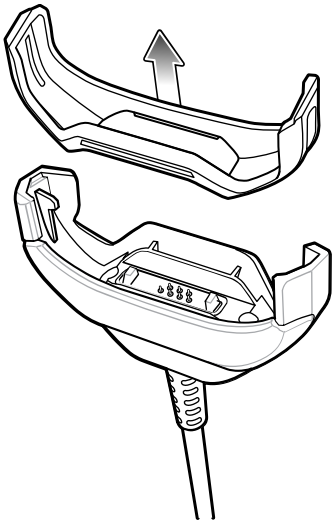

3. Align the cable cup with the bottom of the device.
4. Press the device into the cable cup until it securely in place.

USB Communication

To connect the device to a host computer:

1. Connect the Rugged Charge/USB Cable to the device.
2. Connect the USB connector of the cable to a host computer.

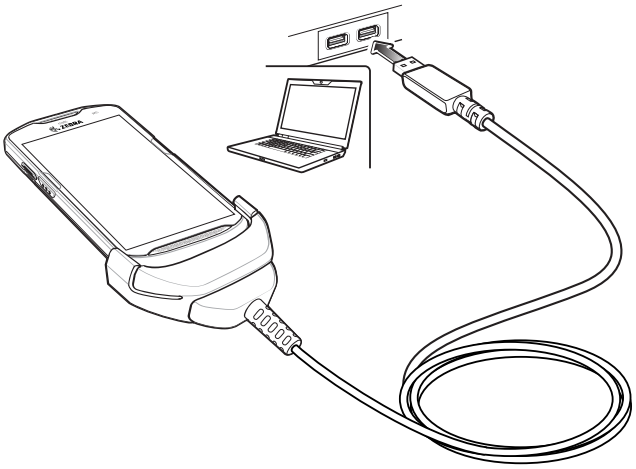

Charging the Device

To charge the device using the Rugged Charge/USB Cable:

1. Connect the Rugged Charge/USB Cable to the device.
2. Connect the USB connector of the power supply.

NOTE:

See Power Supply for information on setting up the power supply.

By default, the device includes an interface connector. If the interface connector is removed for USB Type C cable connectivity, then it must be replaced before charging or receiving an Ethernet IP address if placed in a cradle.

3. Plug to power supply into an power outlet.

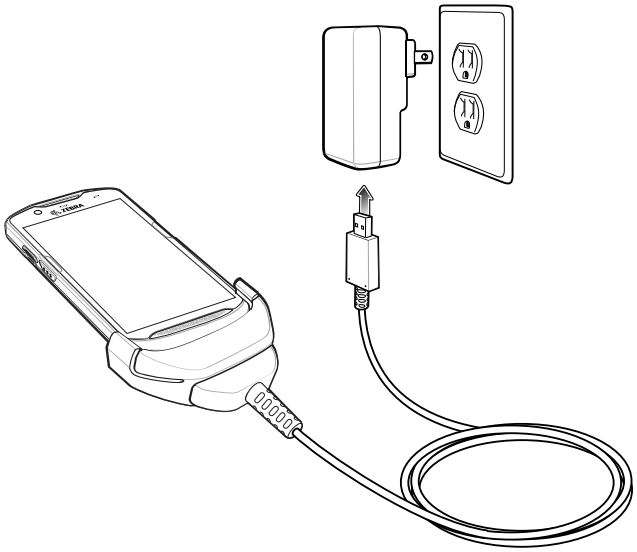

Disconnecting the Rugged Charge/USB Cable

To disconnect the Rugged Charge/USB Cable from the device:

1. Rotate the device to one side.

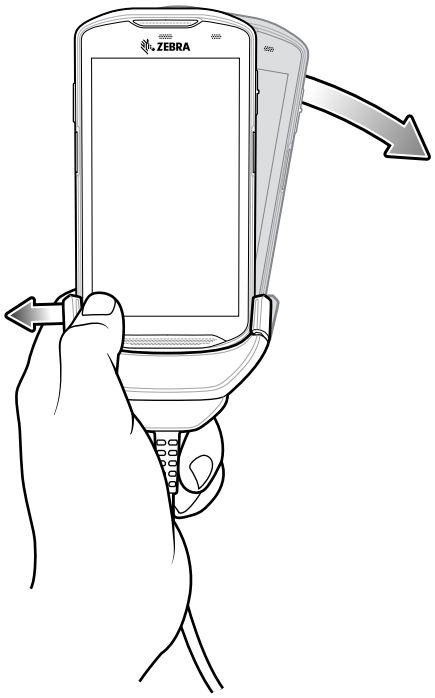

2. Push the Rugged Charge/USB Cable to the other side.

3. Remove the device from the Rugged Charge/USB Cable.

Trigger Handle

The Trigger Handle adds a gun-style handle with a scanning trigger to the device. It increases comfort when using the device in scan-intensive applications for extended periods of time.

NOTE: The Rugged Boot is required to install the Trigger Handle onto the device. Trigger Handle (p/n TRG-TC51-SNP1-01) does not contain the Rugged Boot and must be purchased separately. Trigger Handle Kit (p/n TRG-TC51-TRG1-01) contains the Rugged Boot.

NOTE: The Trigger Handle adds a gun-style handle with a scanning trigger to the device. It increases comfort when using the device in scan-intensive applications for extended periods of time.

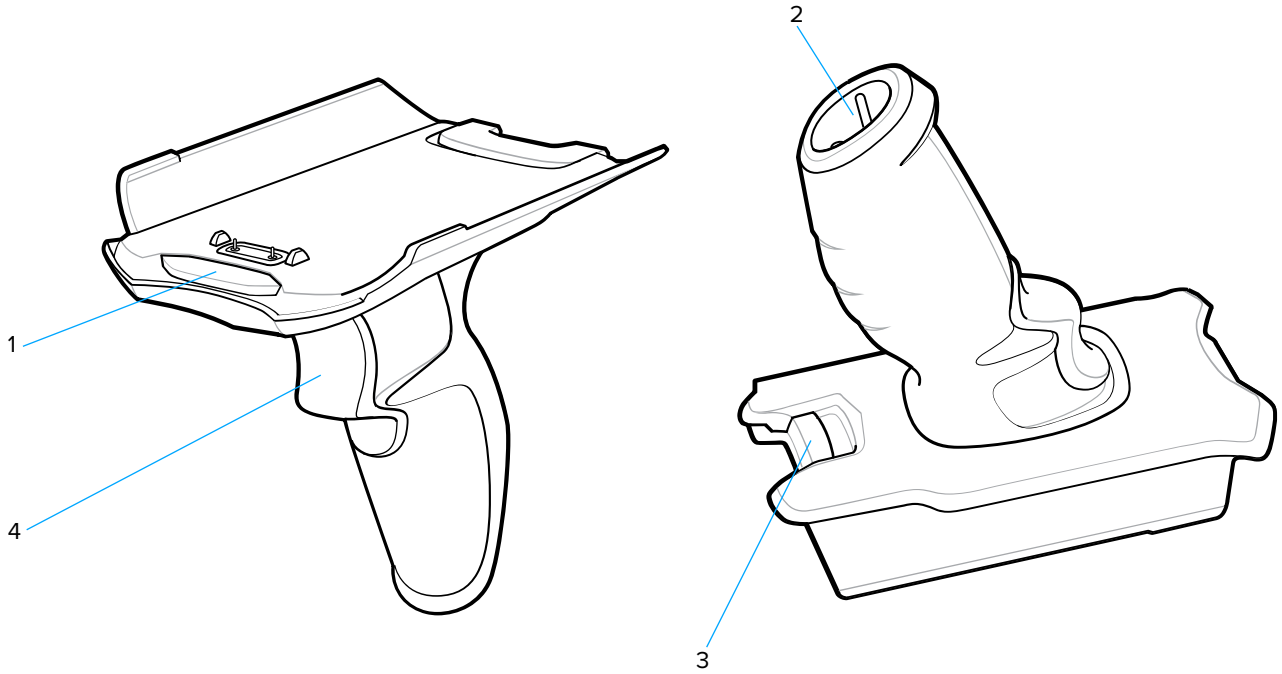

1	Flange
2	Lanyard mount
3	Release latch
4	Trigger

Installing the Rugged Boot

To install the Rugged Boot:

NOTE: If a Hand Strap is attached to the Rugged Boot, remove prior to installing onto device.

1. Insert the bottom of the device into the bottom of the boot.

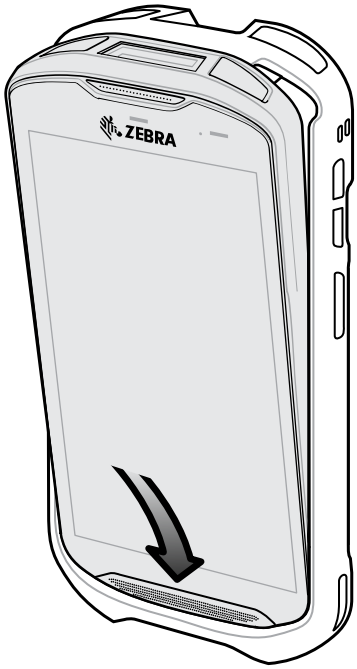

2. Lift the top of the Rugged Boot over the top of the device.

3. Push the device into the Rugged Boot.

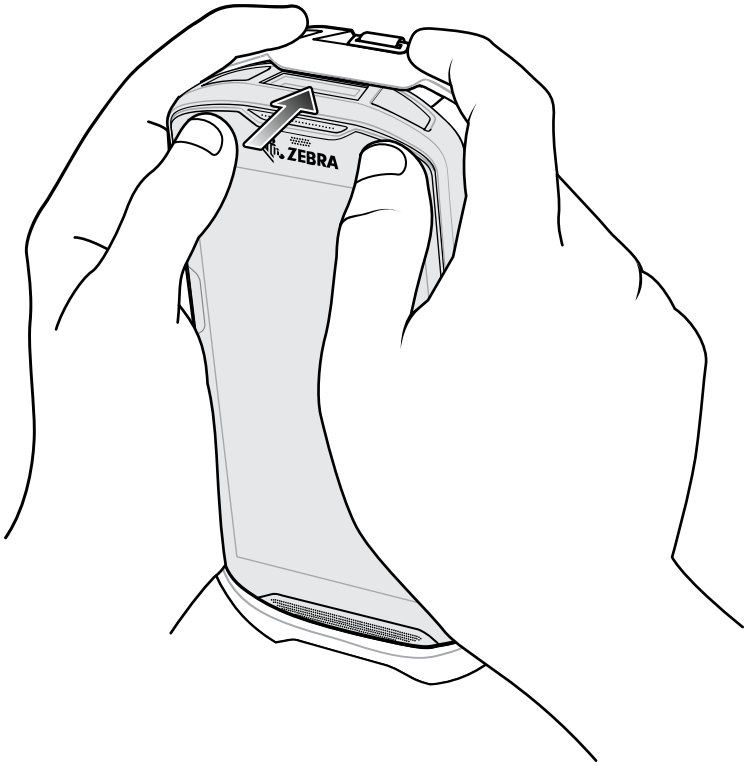

Removing the Device from the Trigger Handle

To remove the device from the Trigger Handle:

1. Press Trigger Handle release latch.

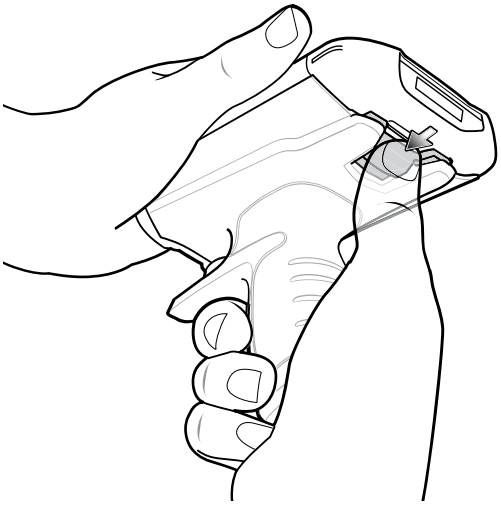

2. Slide the device forward and then rotate the bottom of the device up.

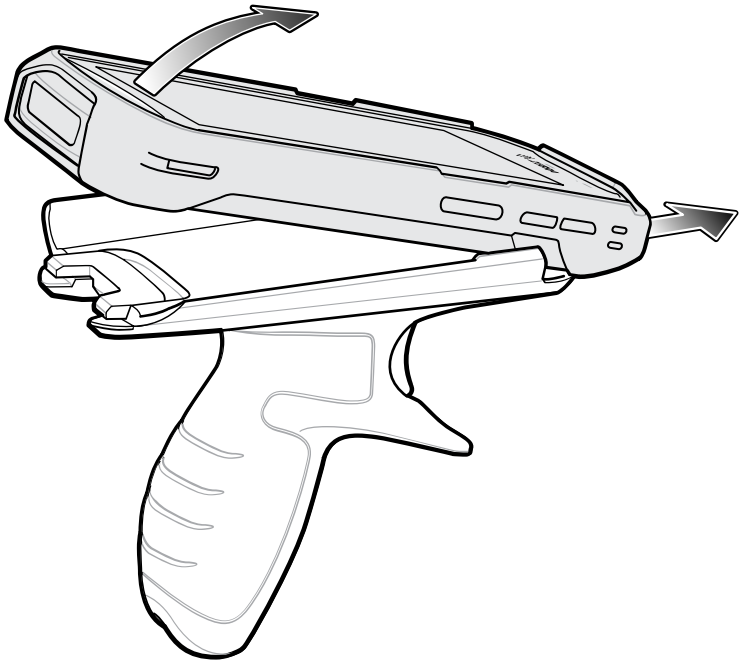

Installing the Optional Lanyard

To install the lanyard onto the Trigger Handle:

1. Insert the loop end of the tether into the slot on the bottom of the handle.
2. Feed the lanyard through the loop.

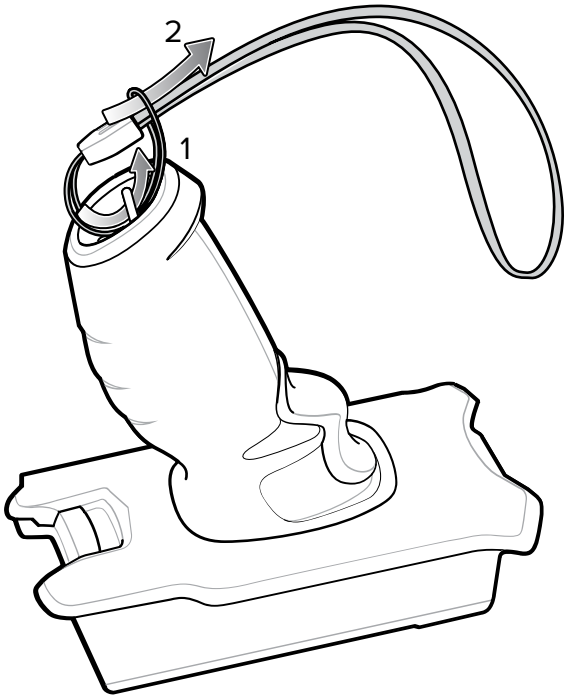

3. Pull the lanyard until the loop tightens.

Inserting the Device into the Trigger Handle

To install the device onto the Trigger handle:

1. Align and insert the flange of the Trigger Handle with the top of the Rugged Boot.

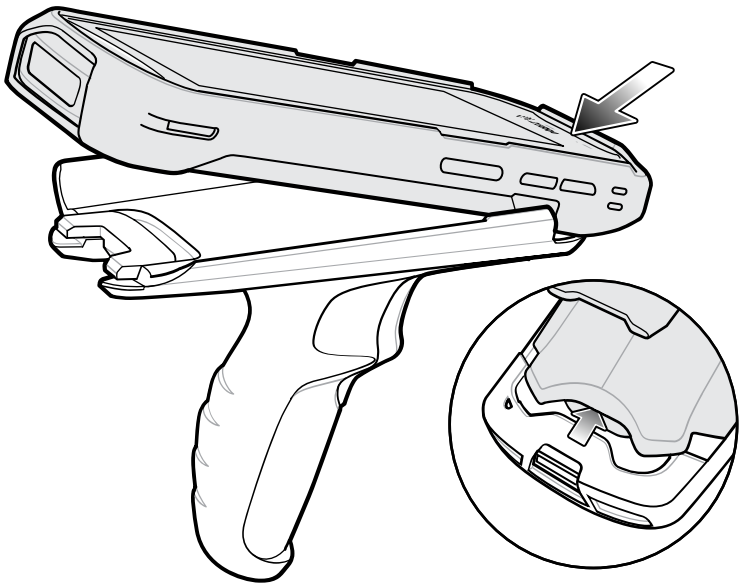

2. Rotate the device down and press down until it snaps into place.

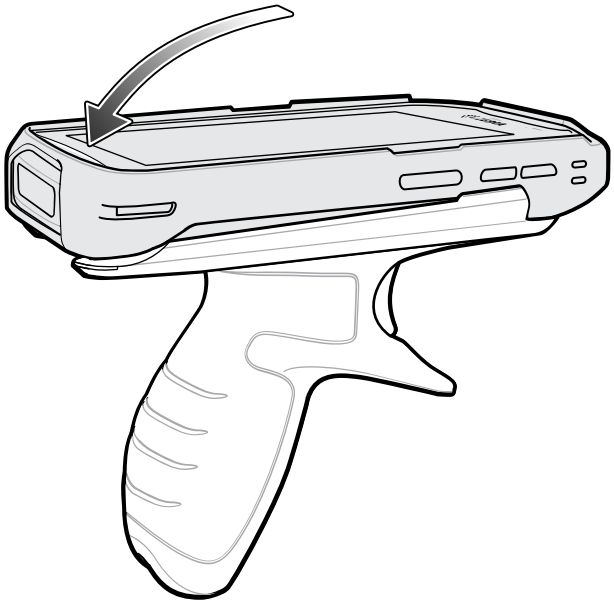

Power Supply

Use the power supply with the Rugged Charge/USB Cable to charge the device. The power supply comes in various configurations with different plug adapters for use internationally. To change the plug adapters:

1. Pull the release button down.

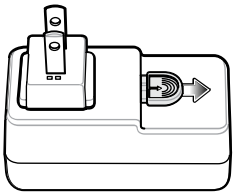

2. Rotate the plug adapter up and out of the power supply.

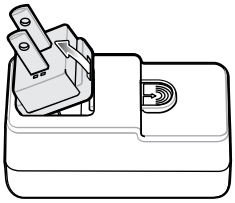

3. Insert the replacement plug adapter into the power supply.

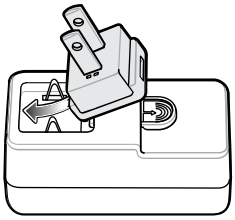

4. Rotate the plug adapter down, and snap it into place.

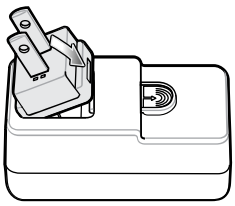

5-Slot Cradle Rack Installation

Use the Rack/Wall Mount Bracket to mount a 5-slot cradle on a rack. When installing on a rack, first assemble the bracket and cradles/chargers and then install the assembly on the rack.

1. Place the power supply in bottom tray.
2. Connect AC line cord to power supply.
3. Connect DC line cord to power supply.
4. Secure power supply and cables to bottom tray with tie wraps.

NOTE: Ensure tie wrap buckle is on side of power supply. Tie wrap buckle on top of power supply interferes with top tray.

5. Route cables through cable slots.

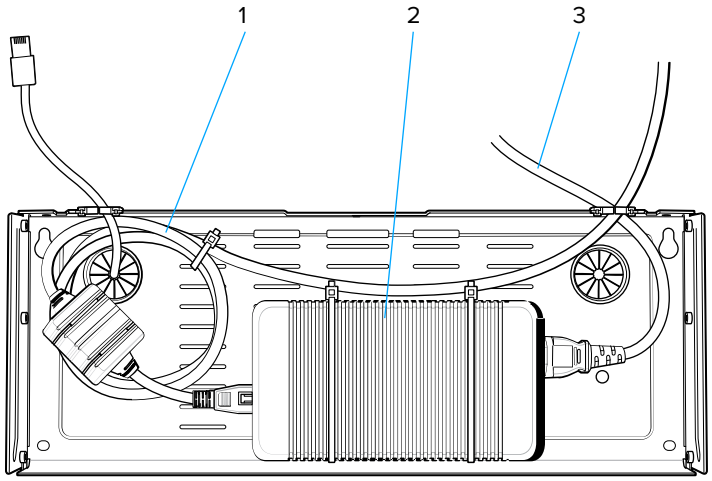

1	DC line cord
2	Power supply
3	AC line cord

6. Secure four M2.5 studs to top tray as shown.

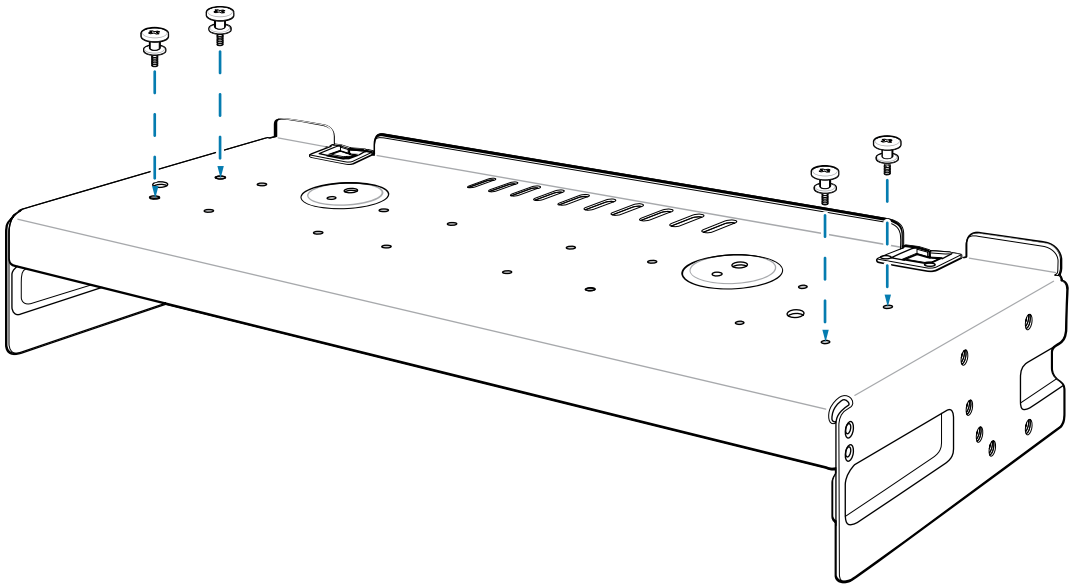

7. Align and install 5-Slot cradle onto studs of top tray.

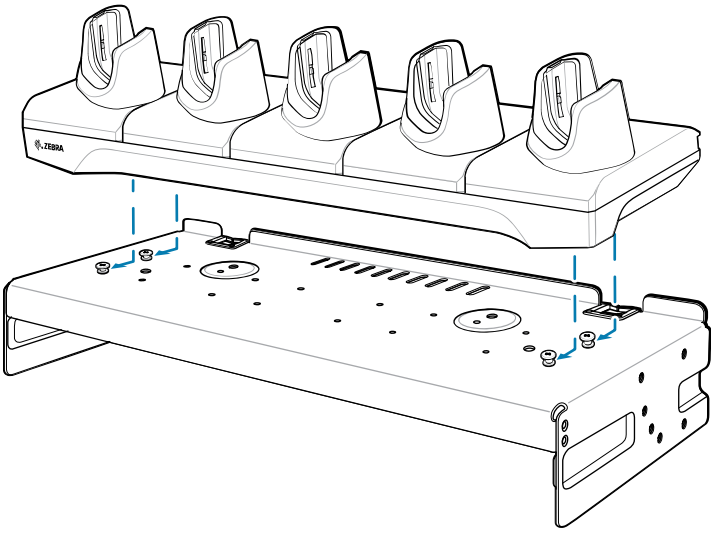

8. Secure cradle to top tray with two M2.5 safety screws.

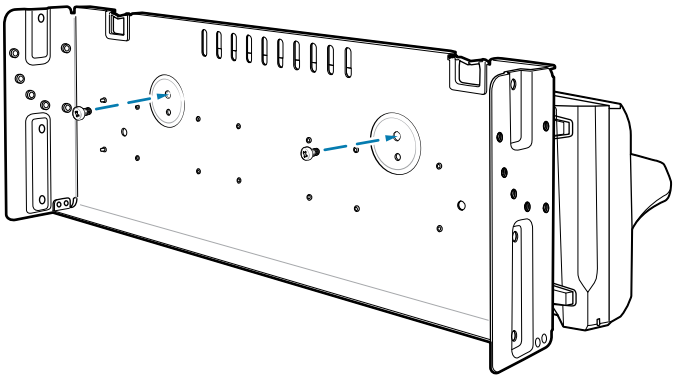

9. Slide top tray onto bottom tray.

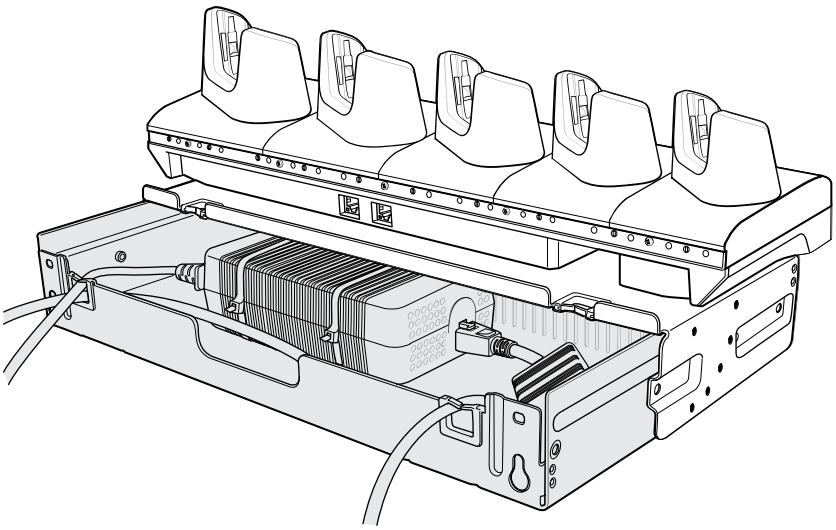

10. Connect cables to cradle.

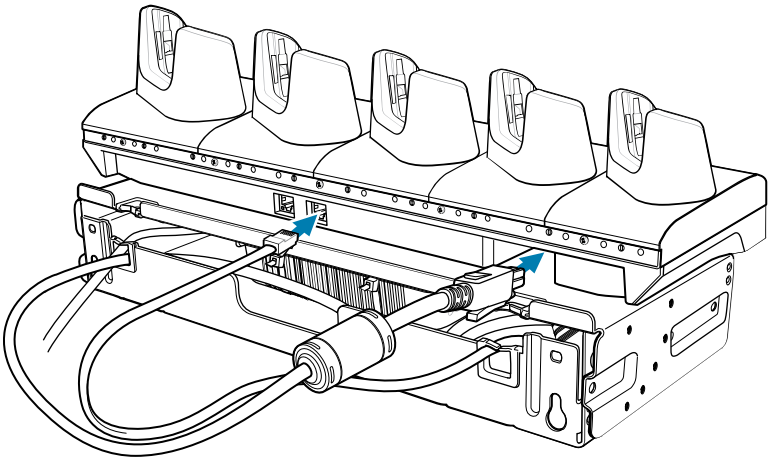

11. Secure top tray to bottom tray with 4 M5 screws (two on each side).

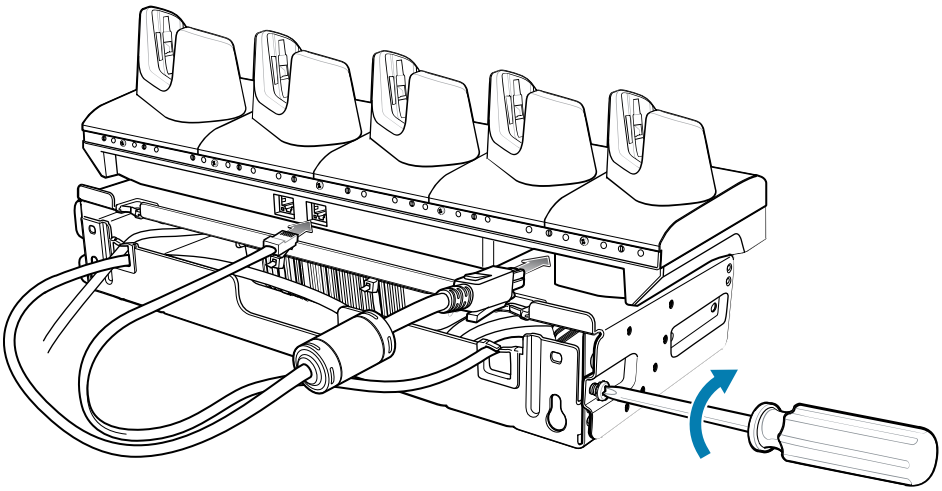

See Rack Mount Installation for installing the bracket assembly onto a rack.

Four 4-Slot Battery Charger Bracket Installation

Use the Rack/Wall Mount Bracket to mount four 4-Slot Battery Chargers on a rack. When installing on a rack, first assemble the bracket and chargers and then install the assembly on the rack.

1. Place one power supply horizontally in the bottom tray.
2. Place another power supply vertically in the bottom tray.
3. Connect AC line cords to the power supplies.
4. Connect DC line cords to the power supplies.
5. Secure the power supplies and cables to the bottom tray with tie wraps.

6. Route the cables through the cable slots.

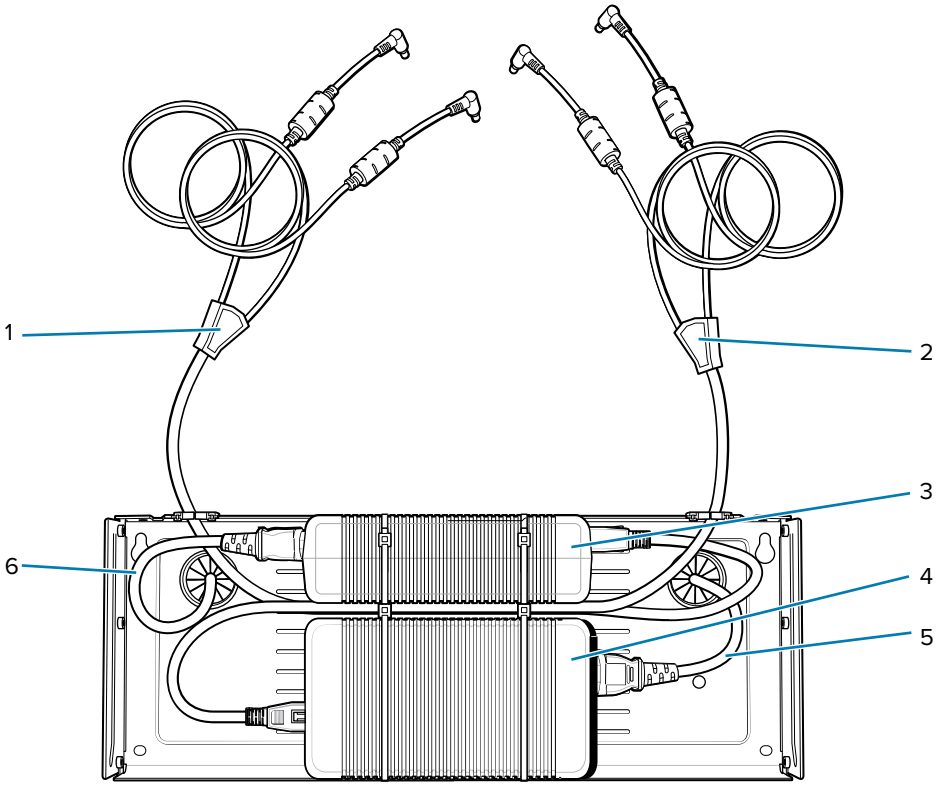

1	DC Y cable 1
2	DC Y cable 2
3	Power supply 1
4	Power supply 2
5	AC line cord 2
6	AC line cord 1

7. Slide the top tray onto the bottom tray until the top tray touches the vertical power supply.

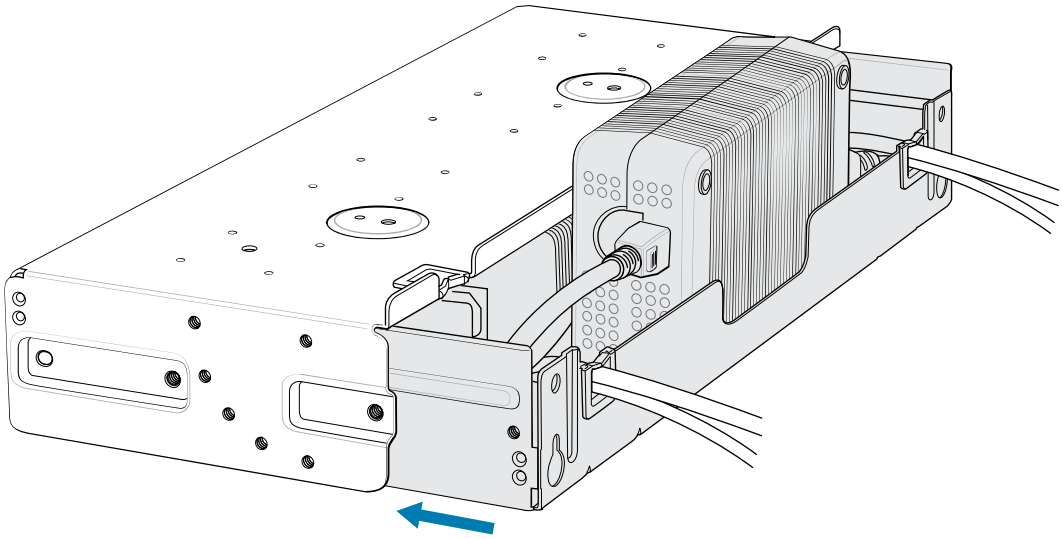

8. Install 16 M2.5 studs onto the top tray as shown.

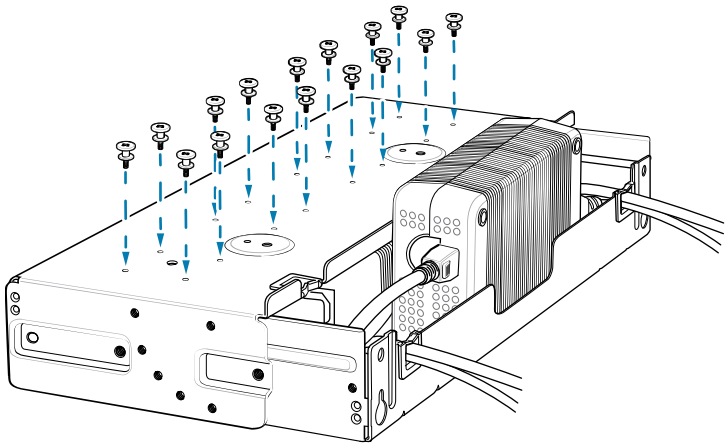

9. Align and install a 4-Slot Battery Charger onto each set of four studs.

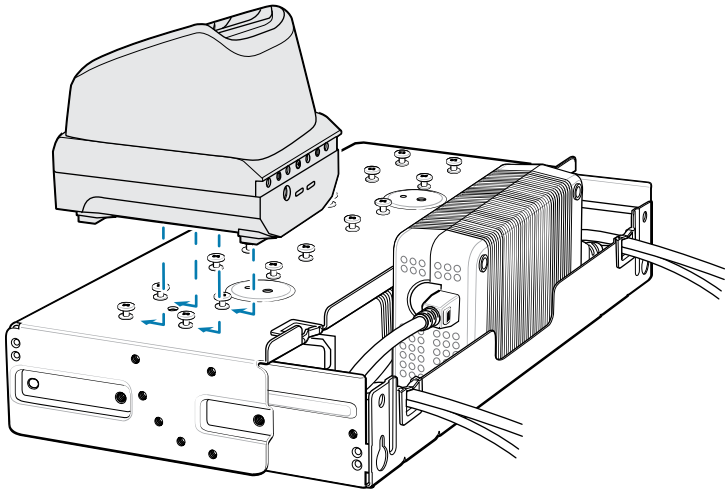

10. Connect DC Y cables to the four 4-Slot Battery Chargers.

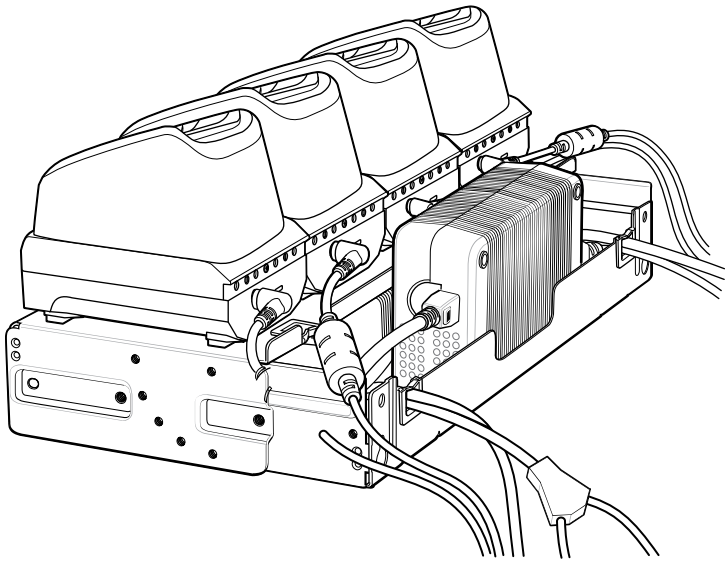

11. Secure the top tray to the bottom tray with four M5 screws (two on each side).

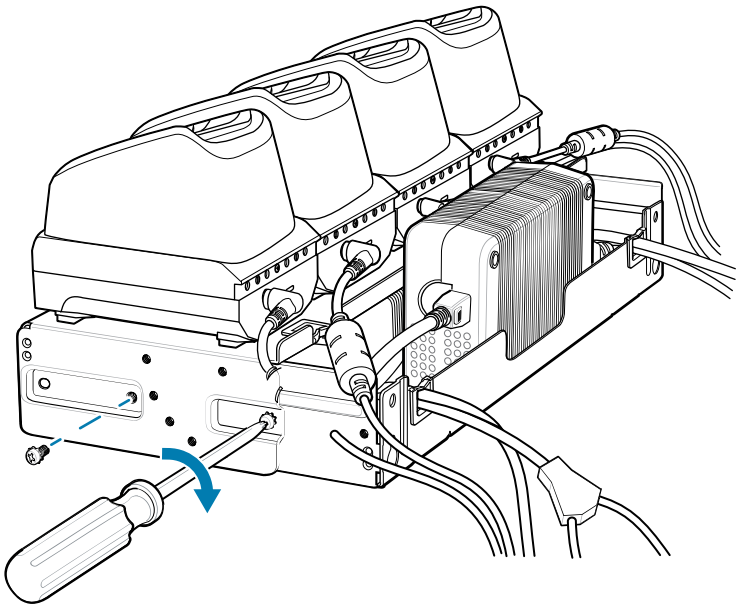

Go to Rack Mount Installation on page 180 for installing the bracket onto a rack.

Rack Mount Installation

NOTE: Use screws provided with rack system. Refer to rack user documentation for instructions.

CAUTION: Installer should ensure that all building codes are followed when connecting the power supplies to an AC power source.

While installing the brackets, power supplies and cables:

- Use tie wraps to secure cables to the bracket and rails.
- Coil cables wherever possible.
- Route power cables along the rails.
- Route inter-cradle cables to the side rails and then from the rails to the bracket.

1. Secure mounting brackets to both sides of top tray with four M5 screws (two on each side). For 5-Slot cradles, position the flange for horizontal installation. For 4-Slot Battery Chargers, position the flange for 25° installation.

Figure 53 Flange Horizontal Position (5-Slot Cradles)

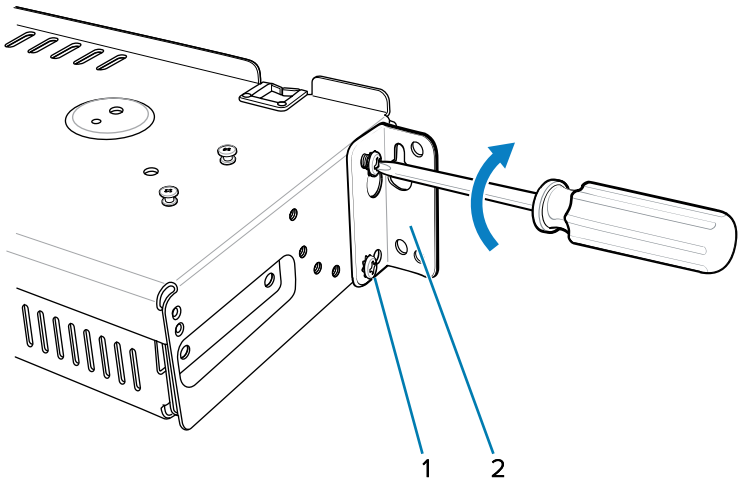

1	Fifth screw hole
2	Flange

Figure 54 Flange 25° Position (4-Slot Battery Chargers)

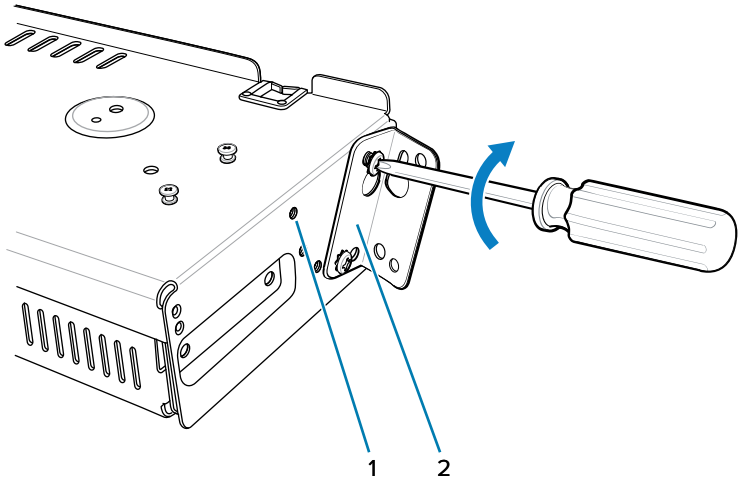

1	Top screw hole

2	Flange

CAUTION: Install mounting bracket with 5-Slot cradle at a maximum height of four feet from ground. Install mounting bracket with 4-Slot Battery Charger at a maximum height of three feet from ground.

NOTE: Distance between two horizontal mounted brackets should be at least 14” apart (from top of one flange to the top of the next flange). Distance between a horizontal mounted bracket and a 25° mounted bracket should be at least 16.25” apart (from top of one flange to the top of the next flange). There should be enough clearance (2.75”) between the top of the device and the bottom of the mounting bracket above.

2. Install two rack system screws for top of mounting brackets. The screw heads should protrude half way from the rail.

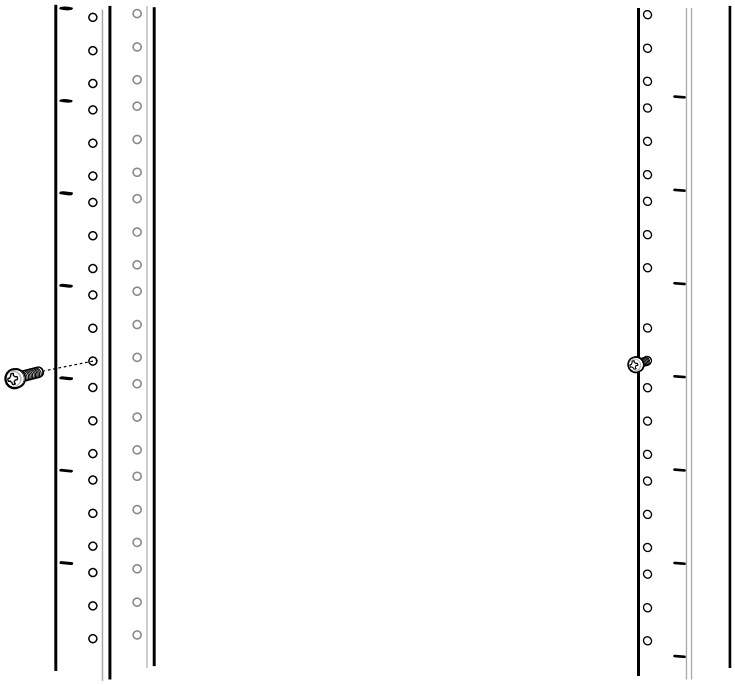

3. Align the mounting bracket’s top mounting key holes with the screws.

4. Place the brackets on the screws.

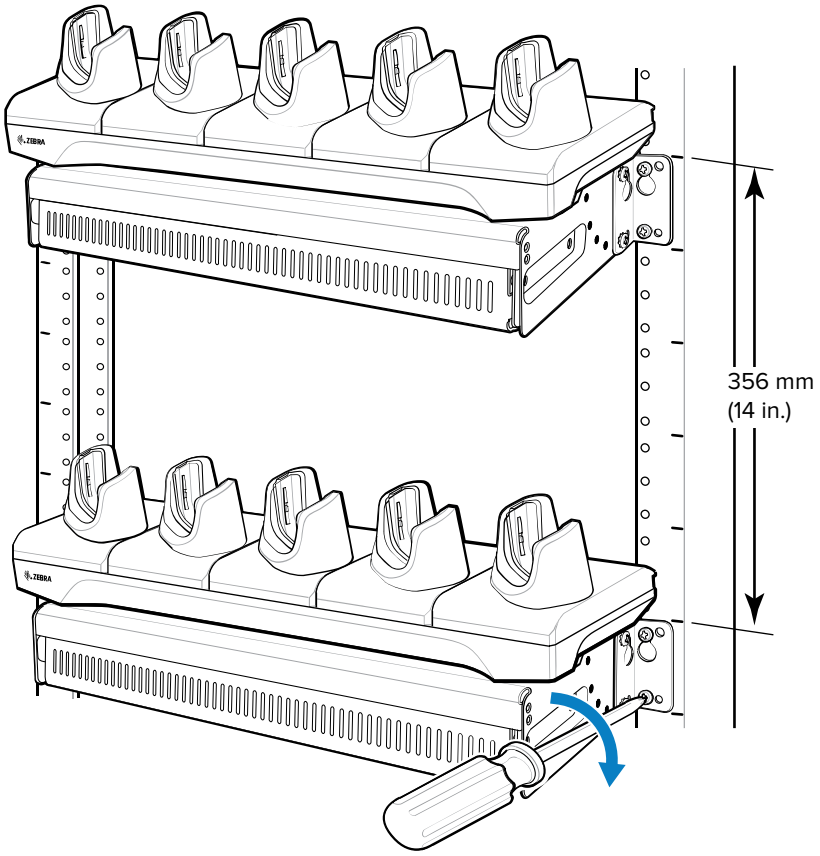

5. Secure the top screws.
6. Install bottom screws and tighten screws.
7. Route cables and connect to power source.

Wall Installation

Use the Rack/Wall Mount Bracket to mount four 4-Slot Battery Chargers or a cradle on a wall. When installing on a wall, first assemble the bottom tray, install the bottom tray on the wall and then assemble the top tray. Use mounting hardware (screws and/or anchors) appropriate for the type of wall mounting the bracket onto. The Mount Bracket mounting slots dimensions are 5 mm (0.2 in.). Fasteners must be able to hold a minimum of 20 Kg (44 lbs.) For proper installation consult a professional installer. Failure to install the bracket properly can possibly result in damage to the hardware.

CAUTION: Install mounting bracket with 5-Slot cradle at a maximum height of four feet from ground. Install mounting bracket with 4-Slot Battery Charger at a maximum height of three feet from ground.

Bottom Tray Assembly

See steps 1 through 5 of 4-Slot Battery Chargers Rack Installation for instructions.

Mounting the Bracket

CAUTION: Installer should ensure that all building codes are followed when connecting the power supplies to an AC power source.

While installing the brackets, power supplies and cables:

- Use tie wraps to secure cables to the bracket and rails.
- Coil cables wherever possible.
- Route power cables along the rails.
- Route inter-cradle cables to the side rails and then from the rails to the bracket.

1. Drill holes and install anchors according to the template supplied with the bracket.
2. Install two screws for bottom of bracket. The screw heads should protrude 2.5 mm (0.01”) from the wall.

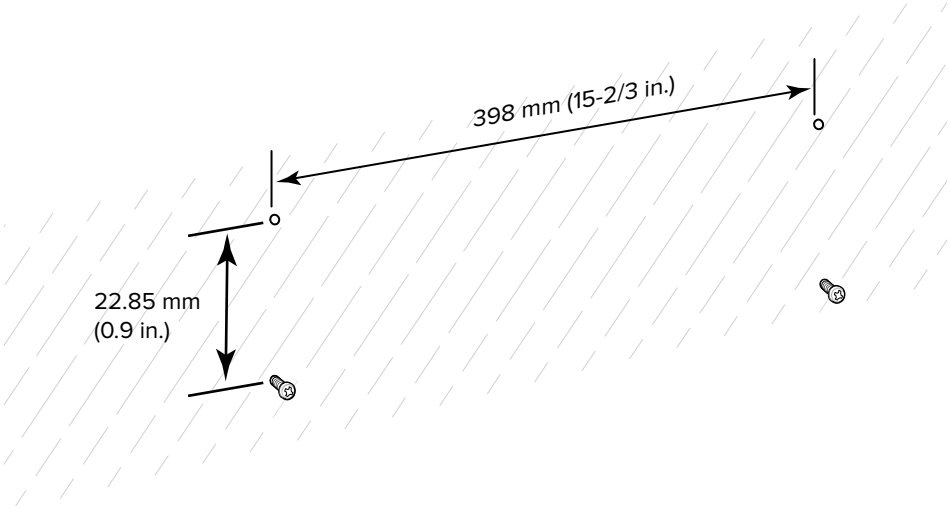

3. Align the mounting bracket’s bottom mounting key holes with the screws.
4. Hang the bracket on the screws.

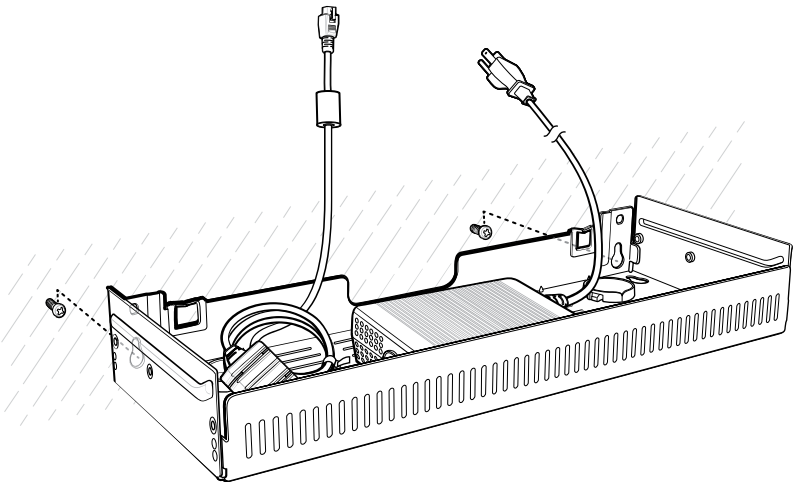

5. Install two top screws.

6. Tighten all screws.

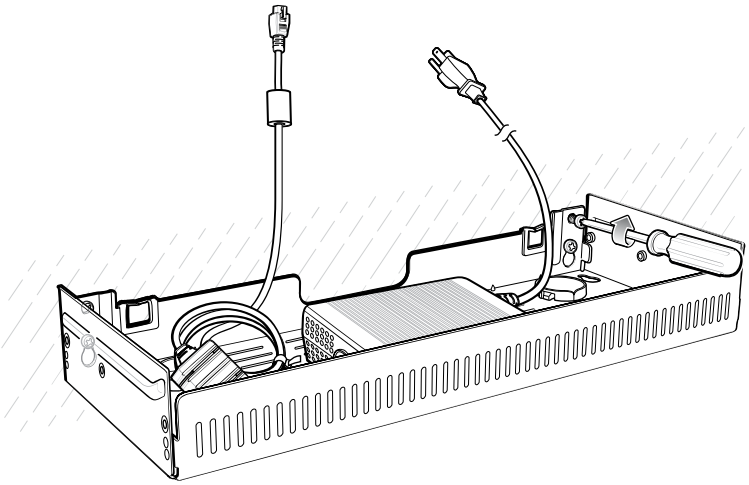

7. Add the four 4-Slot Battery Chargers or cradle onto the bracket.
8. Route cables and connect to power source.

Application Deployment

This section provides an overview of device security, app development, and app management. It also provides instructions for installing apps and updating the device software.

NOTE: Ensure the date is set correctly before installing certificates or when accessing secure websites.

Security

The device implements a set of security policies that determine whether an application is allowed to run and, if allowed, with what level of trust. To develop an application, you must know the security configuration of the device, and how to sign an application with the appropriate certificate to allow the application to run (and to run with the needed level of trust).

NOTE: Ensure the date is set correctly before installing certificates or when accessing secure web sites.

Secure Certificates

If the VPN or Wi-Fi networks rely on secure certificates, obtain the certificates and store them in the device's secure credential storage before configuring access to the VPN or Wi-Fi networks.

If downloading the certificates from a web site, set a password for the credential storage. The device supports X.509 certificates saved in PKCS#12 key store files with a .p12 extension (if key store has a .pfx or other extension, change to .p12).

The device also installs any accompanying private key or certificate authority certificates contained in the key store.

Installing a Secure Certificate

If required by the VPN or Wi-Fi network, install a secure certificate on the device.

1. Copy the certificate from the host computer to the root of the microSD card or the device's internal memory.
2. Go to **Settings**.
3. Touch **Security** > **Encryption & credentials**.
4. Select the type of certificate.
5. Navigate to the location of the certificate file.

6. Touch the filename of the certificate to install.
7. If prompted, enter the certificate's password and touch **OK**.
8. Enter a name for the certificate and in the Credential use drop-down, select **VPN and apps** or **Wi-Fi**.
9. Touch **OK**.

The certificate can now be used when connecting to a secure network. For security, the certificate is deleted from the microSD card or internal memory.

See Also
USB Communication

Configuring Credential Storage Settings

Configure credential storage from the device settings.

1. Go to **Settings**.
2. Touch **Security** > **Encryption & credentials** .
3. Select an option.
   - Touch **Trusted credentials** to display the trusted system and user credentials.
   - Touch **User credentials** to display user credentials.
   - Touch **Install a certificate** to install a secure certificate from the microSD card or internal storage.
   - Touch **Clear credentials** to delete all secure certificates and related credentials.

Android Development Tools

Development tools for Android include Android Studio, EMDK for Android, and StageNow.

Android Development Workstation

Android development tools are available at developer.android.com.

To start developing applications for the device, download Android Studio. Development can take place on a Microsoft® Windows®, Mac® OS X®, or Linux® operating system.

Applications are written in Java or Kotlin, but compiled and executed in the Dalvik virtual machine. Once the Java code is compiled cleanly, the developer tools make sure the application is packaged properly, including the AndroidManifest.xml file.

Android Studio contains a full featured IDE as well as SDK components required to develop Android applications.

Enabling Developer Options

The **Developer options** screen sets development-related settings. By default, the Developer Options are hidden.

1. Go to **Settings**.
2. Touch **About phone**.

3. Scroll down to **Build number**.
4. Tap **Build number** seven times.

   The message **You are now a developer!** appears.
5. Touch **Back**.
6. On Android 11, touch **System** > **Advanced** > **Developer options**.
7. On Android 13, touch **System** > **Developer options**.
8. Slide the **USB debugging** switch to the **ON** position.

EMDK for Android

EMDK for Android provides developers with tools to create business applications for enterprise mobile devices. It is designed for use with Google's Android Studio and includes Android class libraries such as Barcode, sample applications with source code, and the associated documentation.

EMDK for Android allows applications to take full advantage of the capabilities that Zebra devices have to offer. It embeds Profile Manager technology within Android Studio IDE, providing a GUI-based development tool designed specifically for Zebra devices. This allows fewer lines of code, resulting in reduced development time, effort, and errors.

For more information, go to techdocs.zebra.com.

StageNow for Android

StageNow is Zebra's next-generation Android Staging Solution built on the MX platform. It allows quick and easy creation of device profiles, and can deploy to devices simply by scanning a barcode, reading a tag, or playing an audio file.

The StageNow Staging Solution includes the following components:

- The StageNow Workstation tool installs on the staging workstation (host computer) and lets the administrator easily create staging profiles for configuring device components, and perform other staging actions such as checking the condition of a target device to determine suitability for software upgrades or other activities. The StageNow Workstation stores profiles and other created content for later use.
- The StageNow Client resides on the device and provides a user interface for the staging operator to initiate staging. The operator uses one or more of the desired staging methods (print and scan a barcode, read an NFC tag or play an audio file) to deliver staging material to the device.

For more information, go to techdocs.zebra.com.

GMS Restricted

GMS Restricted mode deactivates Google Mobile Services (GMS). All GMS apps are disabled on the device and communication with Google (analytics data collection and location services) is disabled.

Use StageNow to disable or enable GMS Restricted mode. After a device is in GMS Restricted mode, enable and disable individual GMS apps and services using StageNow. To ensure GMS Restricted mode persists after an Enterprise Reset, use the Persist Manager option in StageNow.

For more information on StageNow, go to techdocs.zebra.com.

ADB USB Setup

To use the ADB, install the development SDK on the host computer then install the ADB and USB drivers.

Before installing the USB driver, make sure that the development SDK is installed on the host computer. Go to developer.android.com/sdk/index.html for details on setting up the development SDK.

The ADB and USB drivers for Windows and Linux are available on the Zebra Support Central web site at zebra.com/support. Download the ADB and USB Driver Setup package. Follow the instructions with the package to install the ADB and USB drivers for Windows and Linux.

Enabling USB Debugging

By default, USB debugging is disabled.

1. Go to **Settings**.
2. Touch **About phone**.
3. Scroll down to **Build number**.
4. Tap **Build number** seven times.

   The message **You are now a developer!** appears.
5. Touch **Back**.
6. On Android 11, touch **System** > **Advanced** > **Developer options**.
7. On Android 13, touch **System** > **Developer options**.
8. Slide the **USB debugging** switch to the **ON** position.
9. Touch **OK**.
10. Connect the device to the host computer using the Rugged Charge/USB Cable.

    The **Allow USB debugging?** dialog box appears on the device.

    If the device and host computer are connected for the first time, the **Allow USB debugging?** dialog box with the **Always allow from this computer** check box displays. Select the check box, if required.
11. Touch **OK**.
12. On the host computer, navigate to the **platform-tools** folder and open a command prompt window.
13. Type `adb devices`.

    The following displays:

    ```
    List of devices attached          XXXXXXXXXXXXXXX device
    ```

    Where XXXXXXXXXXXXXXX is the device number.

NOTE: If device number does not appear, ensure that ADB drivers are installed properly.

14. Return to the Home screen.

Entering Android Recovery Manually

Many of the update methods discussed in this section require putting the device into Android Recovery mode. If you are unable to enter Android Recovery mode through `adb` commands, use the following steps to manually enter Android Recovery mode.

1. Press and hold the Power button until the menu appears.
2. Touch **Restart**.
3. Press and hold the PTT button until the device vibrates.

   The System Recovery screen appears.

Application Installation Methods

After an application is developed, install the application onto the device using one of the supported methods.

- USB connection, see Installing Applications Using the USB Connection on page 190.
- Android Debug Bridge, see Installing Applications Using the Android Debug Bridge on page 191.
- Wireless Android Debug Bridge, see Installing Applications Using Wireless ADB on page 191.
- microSD Card, see Installing Applications Using a microSD Card on page 194.
- Mobile device management (MDM) platforms that have application provisioning. Refer to the MDM software documentation for details.

Installing Applications Using the USB Connection

Use the USB connection to install applications onto the device.

CAUTION—PRODUCT DAMAGE: When connecting the device to a host computer and mounting the microSD card, follow the host computer's instructions for connecting and disconnecting USB devices, to avoid damaging or corrupting files.

1. Connect the device to a host computer using the Rugged Charge/USB cable.
2. On the device, pull down the Notification panel and touch **Charging this device via USB**.

   By default, **No data transfer** is selected.
3. Touch **File Transfer**.
4. On the host computer, open a file explorer application.
5. On the host computer, copy the application APK file from the host computer to the device.

CAUTION—PRODUCT DAMAGE: Carefully follow the host computer's instructions to unmount the microSD card and disconnect USB devices correctly to avoid losing information.

6. Disconnect the device from the host computer.
7. Swipe the screen up and select to view files on the Internal Storage.
8. Locate the application APK file.
9. Touch the application file.
10. Touch **Continue** to install the app or **Cancel** to stop the installation.

11. To confirm installation and accept what the application affects, touch **Install**. Otherwise, touch **Cancel**.
12. Touch **Open** to open the application or **Done** to exit the installation process.

    The application appears in the App list.

Installing Applications Using the Android Debug Bridge

Use ADB commands to install applications onto the device.

CAUTION—PRODUCT DAMAGE: When connecting the device to a host computer and mounting the microSD card, follow the host computer's instructions for connecting and disconnecting USB devices to avoid damaging or corrupting files.

1. Ensure that the ADB drivers are installed on the host computer.
2. Connect the device to a host computer using a USB cable.
3. Go to **Settings**.
4. On Android 11, touch **System** > **Advanced** > **Developer options**.
5. On Android 13, touch **System** > **Developer options**.
6. Slide the **USB debugging** switch to the **ON** position.
7. Touch **USB Debugging**. A check appears in the check box. The **Allow USB debugging?** dialog box appears.
8. Touch **OK**.
9. On the host computer, navigate to the **platform-tools** folder and open a command prompt window.
10. Type `adb install <application>`.

    where: <application> = the path and filename of the apk file.
11. Disconnect the device from the host computer.

Installing Applications Using Wireless ADB

Use ADB commands to install an application onto the device.

Go to the Zebra Support & Downloads web site at zebra.com/support and download the appropriate file to a host computer.

IMPORTANT: Note the following:

- Ensure that the latest adb files are installed on the host computer.
- The device and the host computer must be on the same wireless network.

1. Go to **Settings**.
2. On Android 11, touch **System** > **Advanced** > **Developer options**.
3. On Android 13, touch **System** > **Developer options**.

IMPORTANT: If **Developer options** does not appear in the advanced system settings on your device, perform the steps in Enabling Developer Options on page 187.

4. Slide the **USB debugging** switch to the **ON** position.
5. At the prompt, tap **OK**.

6. Slide the **Wireless debugging** switch to the **ON** position.

   a) If the device and host computer are connected for the first time, the **Allow wireless debugging on this network?** dialog box with the **Always allow on this network** check box displays. Select the check box, if required.

   b) Touch **ALLOW**.

7. Touch **Wireless debugging**.

   The **Wireless debugging** screen displays.

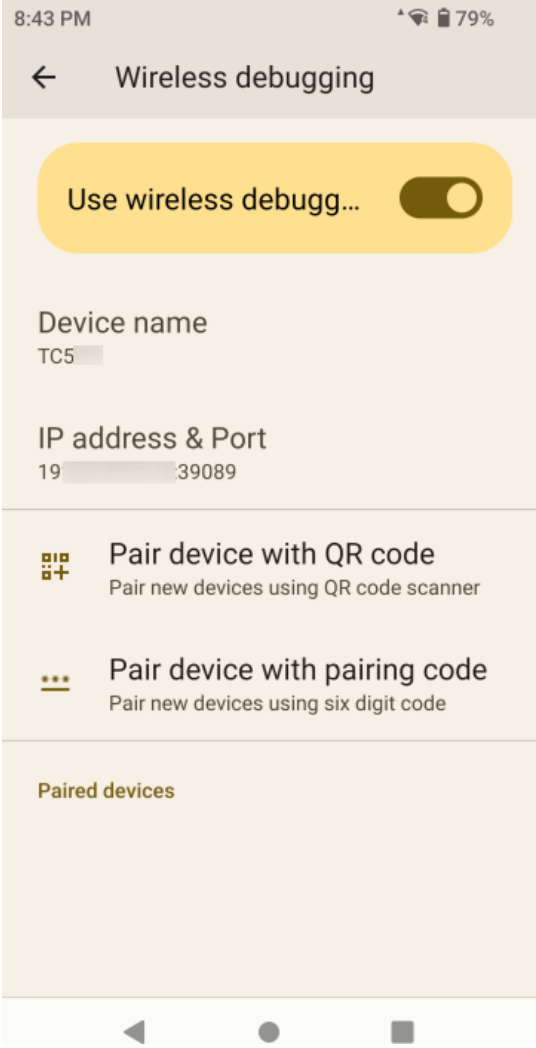

8. Note the IP address and Port on the **Wireless debugging** screen.

9. Touch **Pair device with pairing code**.

   The **Pair with device** dialog box displays.

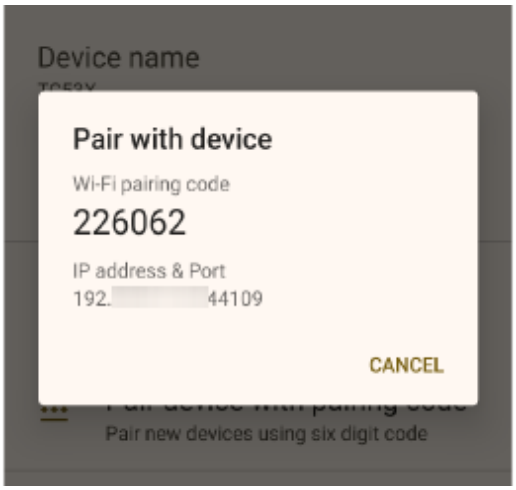

10. Note the Port on the **Pair with device** dialog box. It will be different than the one on the **Wireless debugging** screen. The IP address will be the same.
11. On the host computer, navigate to the **platform-tools** folder and open a command prompt window.
12. Type `adb pair XX.XX.XX.XX:XXXXX`

    where XX.XX.XX.XX:XXXXX is the IP address and port number from the **Pair with device** dialog box.
13. Press **Enter**.
14. Type the pairing code from the **Pair with device** dialog box.
15. Press **Enter**.
16. Type `adb connect XX.XX.XX.XX:XXXXX`

    where XX.XX.XX.XX:XXXXX is the IP address and port number from the **Wireless debugging** screen.
17. Press **Enter**.

    The device is now connected to the host computer.
18. Type `adb devices`.

    The following displays:

```
List of devices attached          XXXXXXXXXXXXXXX device
```

    Where XXXXXXXXXXXXXXX is the device number.

NOTE: If device number does not appear, ensure that ADB drivers are installed properly.

19. Press **Enter**.
20. Type `adb install <file>`.

    where <file> = the path and filename of the apk file.
21. Press **Enter**.

22. On the host computer, type:

    `adb disconnect`.

23. Press **Enter**.

Installing Applications Using a microSD Card

Use a microSD card to install applications on your device.

CAUTION—PRODUCT DAMAGE: When connecting the device to a host computer and mounting the microSD card, follow the host computer's instructions for connecting and disconnecting USB devices, to avoid damaging or corrupting files.

It is strongly recommended that prior to use, you must format the microSD card on the device.

1. Copy the APK file to the root of the microSD card.
   - Copy the APK file to a microSD card using a host computer (see USB Communication for more information), and then install the microSD card into the device (see Replacing the microSD Card for more information).
   - Connect the device with a microSD card already installed to the host computer, and copy the .apk file to the microSD card. See USB Communication for more information. Disconnect the device from the host computer.
2. Connect the device to a host computer using USB.
3. Copy the application APK file from the host computer to the microSD card.
4. Remove the microSD card from the host computer.
5. Press and hold the Power button on the device until the menu appears.
6. Touch **Power off**.
7. Press the two battery latches in.
8. Lift the battery from the device.
9. Lift the access door.
10. Insert the microSD card.
11. Replace the access door.
12. Insert the battery, bottom first, into the battery compartment in the back of the device.
13. Press the battery down until the battery release latches snap into place.
14. Press and hold **Power** to turn on the device.
15. Swipe the screen up and select to view files on the microSD card.
16. Locate the application APK file.
17. Touch the application file.
18. Touch **Continue** to install the app or **Cancel** to stop the installation.
19. To confirm installation and accept what the application affects, touch **Install**. Otherwise, touch **Cancel**.
20. Touch **Open** to open the application or **Done** to exit the installation process.

    The application appears in the App list.

See Also
USB Communication

Uninstalling an Application

Free up device memory by removing unused apps.

1. Go to **Settings**.
2. On Android 11, touch **Apps & notifications**.
3. On Android 13, touch **Apps**.
4. Touch **See all apps** to view all apps in the list.
5. Scroll through the list to the app.
6. Touch the app.

   The **App info** screen displays.
7. Touch **Uninstall**.
8. Touch **OK** to confirm.

Android System Update

System Update packages can contain either partial or complete updates for the operating system. Zebra distributes the System Update packages on the Zebra Support & Downloads website. Perform a system update using either a microSD card or using ADB.

Performing a System Update Using microSD Card

It is strongly recommended that, prior to use, you format the microSD card on the device.

Go to the Zebra Support & Downloads website at zebra.com/support and download the appropriate System Update package to a host computer.

1. Copy the System Update ZIP file to the root of the microSD card.
   - Copy the ZIP file to a microSD card using a host computer, and then install the microSD card into the device. See Getting Started for information on installing the microSD card.
   - Connect the device (with a microSD card already installed) to the host computer, copy the ZIP file to the microSD card, and then disconnect the device from the host computer.
2. Press and hold **Power** until the menu appears.
3. Touch **Restart**.
4. Press and hold **PTT** until the device vibrates.

   The System Recovery screen appears.
5. Press **Volume Up** and **Volume Down** to navigate to **Apply upgrade from SD card**.
6. Press **Power**.
7. Press **Volume Up** and **Volume Down** to navigate to the System Update file.

8. Press **Power**.

   The System Update installs, and then the device returns to the Recovery screen.

9. Press **Power** to reboot the device.

Performing a System Update Using ADB

Use ADB to perform a system update.

1. Connect the device to a host computer using the Rugged Charge/USB cable or by inserting the device into the 1-Slot USB/Charge Only Cradle.
2. Go to **Settings**.
3. On Android 11, touch **System** > **Advanced** > **Developer options**.
4. On Android 13, touch **System** > **Developer options**.
5. Slide the **USB debugging** switch to the **ON** position.
6. If the device and host computer are connected for the first time, the **Allow USB debugging?** dialog box with the **Always allow from this computer** check box displays. Select the check box, if required.
7. Touch **OK**.
8. On the host computer, navigate to the **platform-tools** folder and open a command prompt window.
9. Type `adb devices`.

NOTE: If the device number does not appear, ensure that the ADB drivers are installed properly.

10. Type `adb reboot recovery`.
11. Press **Enter**.

    The System Update installs (progress appears as a percentage in the Command Prompt window) and then the System Recovery screen appears on the device.

12. Press **Volume Up** and **Volume Down** to navigate to **Apply upgrade from ADB**.
13. Press **Enter**.

    The System Recovery screen appears on the device.

14. Press **Power**.
15. On the host computer command prompt window type `adb sideload <file>`.

    where: <file> = the path and filename of the zip file.

16. Press **Enter**.

    The System Update installs (progress appears as a percentage in the Command Prompt window) and then the System Recovery screen appears on the device.

17. Press **Power** to reboot the device.

If you are not able to enter Android Recovery mode through the adb command, see Entering Android Recovery Manually on page 190.

Verifying System Update Installation

Verify that the system update was successful.

1. Go to **Settings**.
2. Touch **About phone**.
3. Scroll down to **Build number**.
4. Ensure that the build number matches the new system update package file number.

Android-Enterprise Reset

An Enterprise Reset erases all user data in the /data partition, including data in the primary storage locations (/sdcard and emulated storage), while preserving the contents of the /enterprise folder and its subfolders. The contents of the /enterprise folder and its subfolders are preserved. Zebra distributes the Enterprise Reset packages on the Zebra Support & Downloads website.

Before performing an Enterprise Reset, provision all necessary configuration files and restore after the reset.

Performing an Enterprise Reset Using microSD Card

It is strongly recommended that, prior to use, you format the microSD card on the device.

1. Copy the Enterprise Reset zip file to the root of the microSD card.
   - Copy the zip file to a microSD card using a host computer and then install the microSD card into the device. See Getting Started for more information.
   - Connect the device with a microSD card already installed to the host computer and copy zip file to the microSD card. See USB Communication for more information. Disconnect the device from the host computer.
2. Press and hold **Power** until the menu appears.
3. Touch **Restart**.
4. Press and hold **PTT** until the device vibrates.

   The System Recovery screen appears.
5. Press **Volume Up** and **Volume Down** to navigate to **Apply upgrade from SD card**.
6. Press **Power**.
7. Press **Volume Up** and **Volume Down** to navigate to the Enterprise Reset file.
8. Press **Power**.

   The Enterprise Reset occurs and then the device returns to the Recovery screen.
9. Press **Power** to reboot the device.

Performing an Enterprise Reset Using ADB

Perform an Enterprise Reset using ADB.

1. Connect the device to a host computer using the Rugged Charge/USB cable or by inserting the device into the 1-Slot USB/Charge Only Cradle.

2. Connect the cable or cradle to the host computer.
3. Go to **Settings**.
4. On Android 11, touch **System** > **Advanced** > **Developer options**.
5. On Android 13, touch **System** > **Developer options**.
6. Slide the **USB debugging** switch to the **ON** position.
7. If the device and host computer are connected for the first time, the **Allow USB debugging?** dialog box with the **Always allow from this computer** check box displays. Select the check box, if required.
8. Touch **OK**.
9. On the host computer command prompt window type `adb sideload <file>`

   where: <file> = the path and filename of the zip file.
10. Type `adb devices`.

    The following displays:

    ```
    List of devices attached
    XXXXXXXXXXXXXXX device
    ```

    Where XXXXXXXXXXXXXXX is the device number.

NOTE: If the device number does not appear, ensure that the ADB drivers are installed properly.

11. Press **Enter**.

    The System Recovery screen appears on the device.
12. Press **Volume Up** and **Volume Down** to navigate to **Apply upgrade from ADB**.
13. Press **Power**.
14. On the host computer command prompt window type `adb sideload <file>`

    where: <file> = the path and filename of the zip file.
15. Press **Enter**.

    The Enterprise Reset package installs, and then the System Recovery screen appears on the device.
16. Press **Power** to reboot the device.

Android Factory Reset

A Factory Reset erases all data in the /data and /enterprise partitions in internal storage and clears all device settings. A Factory Reset returns the device to the last installed operating system image. To revert to a previous operating system version, re-install that operating system image. Zebra distributes the Factory Reset packages on the Zebra Support & Downloads website.

Performing a Factory Reset Using microSD Card

Perform a Factory Reset using a microSD card.

Go to the Zebra Support & Downloads website at zebra.com/support and download the appropriate Factory Reset file to a host computer.

1. Copy the Factory Reset zip file to the root of the microSD card.
   - Copy the zip file to a microSD card using a host computer and then installing the microSD card into the device. See Getting Started for more information.
   - Connect the device with a microSD card already installed to the host computer, copy zip file to the microSD card, and then disconnect the device from the host computer.
2. Press and hold **Power** until the menu appears.
3. Touch **Restart**.
4. Press and hold **PTT** until the device vibrates.

   The System Recovery screen appears.
5. Press **Volume Up** and **Volume Down** to navigate to **Apply upgrade from SD card**.
6. Press **Power**.
7. Use **Volume Up** and **Down Arrow** to navigate to the Factory Reset file.
8. Press **Power**.

   The Factory Reset occurs, and then the device returns to the Recovery screen.
9. Press **Power** to reboot the device.

See Also

USB Communication

Performing a Factory Reset Using ADB

Perform a Factory Reset using ADB.

Go to the Zebra Support & Downloads website at zebra.com/support and download the appropriate Factory Reset file to a host computer.

1. Connect the device to a host computer using the Rugged Charge/USB cable or by inserting the device into the 1-Slot USB/Charge Only Cradle.
2. Go to **Settings**.
3. On Android 11, touch **System** > **Advanced** > **Developer options**.
4. On Android 13, touch **System** > **Developer options**.
5. Slide the **USB debugging** switch to the **ON** position.
6. If the device and host computer are connected for the first time, the **Allow USB debugging?** dialog box with the **Always allow from this computer** check box displays. Select the check box, if required.
7. Touch **OK**.
8. On the host computer, navigate to the **platform-tools** folder and open a command prompt window.

9. Type `adb devices`.

   The following displays:

   ```
   List of devices attached
   XXXXXXXXXXXXXXX device
   ```

   Where XXXXXXXXXXXXXXX is the device number.

NOTE: If the device number does not appear, ensure that the ADB drivers are installed properly.

10. Type:

    `adb reboot recovery`

11. Press **Enter**.

    The System Recovery screen appears on the device.

12. Press **Volume Up** and **Volume Down** buttons to navigate to **Apply upgrade from ADB**.
13. Press **Power**.
14. On the host computer command prompt window type`adb sideload <file>`.

    where: <file> = the path and filename of the zip file.

15. Press **Enter**.

    The Factory Reset package installs, and then the System Recovery screen appears on the device.

16. Press **Power** to reboot the device.

Android Storage

The device contains multiple types of file storage.

- Random Access Memory (RAM)
- On-device Storage
- Internal storage
- External storage (microSD card)
- Enterprise folder.

NOTE: It is recommended to install a microSD card on the device due to limited internal storage space.

Random Access Memory

Executing programs use RAM to store data. Data stored in RAM is lost upon a reset.

The operating system manages how applications use RAM. It only allows applications and component processes and services to use RAM when required. It may cache recently used processes in RAM, so they restart more quickly when opened again, but it will erase the cache if it needs the RAM for new activities.

The screen displays the amount of used and free RAM.

- **Performance** - Indicates memory performance.

- **Total memory** - Indicates the total amount of RAM available.
- **Average used (%)** - Indicates the average amount of memory (as a percentage) used during the period of time selected (default - 3 hours).
- **Free** - Indicates the total amount of unused RAM.
- **Memory used by apps** - Touch to view RAM usage by individual apps.

Viewing Memory

View the amount of memory used and free RAM.

1. Go to **Settings**.
2. On Android 11, touch **System** > **Advanced** > **Developer options**.
3. On Android 13, touch **System** > **Developer options**.
4. Touch **Memory**.

Internal Storage

The device has internal storage. The internal storage content can be viewed and files copied to and from when the device is connected to a host computer. Some applications are designed to be stored on the internal storage rather than in internal memory.

Viewing Internal Storage

View available and used internal storage on the device.

1. Go to **Settings**.
2. Touch **Storage**.

   Storage displays the total amount of space on internal storage and amount used.

   If the device has removable storage installed, touch **Internal shared storage** to display the amount of internal storage used by apps, photos, videos, audio, and other files.

External Storage

The device can have a removable microSD card. The microSD card content can be viewed and files copied to and from when the device is connected to a host computer. The device can have a removable USB drive. The USB drive content can be viewed and files copied to and from when the device is connected to a host computer.

Viewing External Storage

Portable storage displays the total amount of space on the installed microSD card or USB drive and the amount used.

1. Go to **Settings**.
2. Touch **Storage**.

   Touch **General USB Drive** to view the contents of the card.

   Touch **SD card** to view the contents of the card.

3. To unmount the microSD card, touch ⏏.
4. To unmount the USB drive, touch ⏏.

Formatting a microSD Card as Portable Storage

Format a microSD card as portable storage for the device.

1. Touch **SD card**.
2. Touch ⋮ > **Storage settings**.
3. Touch **Format**.
4. Touch **ERASE & FORMAT**.
5. Touch **DONE**.

Formatting a microSD Card as Internal Memory

You can format a microSD card as internal memory to increase the actual amount of the device's internal memory. Once formatted, the microSD card can only be read by this device.

NOTE: The suggested maximum SD card size is 128 GB when using internal storage.

1. Touch **SD card**.
2. Touch ⋮ > **Storage settings**.
3. Touch **Format as internal**.
4. Touch **ERASE & FORMAT**.
5. Touch **DONE**.

Enterprise Folder

The Enterprise folder (within internal flash) is a super-persistent storage that is persistent after a reset and an Enterprise Reset.

The Enterprise folder is erased during a Factory Reset. The Enterprise folder is used for deployment and device-unique data. The Enterprise folder is approximately 128 MB (formatted). Applications can persist data after an Enterprise Reset by saving data to the enterprise/user folder. The folder is ext4 formatted and is only accessible from a host computer using ADB or from an MDM.

Managing Apps

Apps use two kinds of memory: storage memory and RAM. Apps use storage memory for themselves and any files, settings, and other data they use. They also use RAM when they are running.

1. Go to **Settings**.
2. On Android 11, touch **Apps & notifications**.
3. On Android 13, touch **Apps**.
4. Touch **See all XX apps** to view all apps on the device.
5. Touch ⋮ > **Show system** to include system processes in the list.

6. Touch an app, process, or service in the list to open a screen with details about it and, depending on the item, to change its settings, permissions, notifications and to force stop or uninstall it.

App Details

Apps have different kinds of information and controls.

- **Force stop** - Stop an app.
- **Disable** - Disable an app.
- **Uninstall** - Remove the app and all of its data and settings from the device.
- **Notifications** - Set the app notification settings.
- **Permissions** - Lists the areas on the device that the app has access to.
- **Storage & cache** - Lists how much information is stored and includes buttons for clearing it.
- **Mobile data & Wi-Fi** - Provides information about data consumed by an app.
- **Mobile data & Wi-Fi** - Provides information about data consumed by an app. Mobile data not supported.
- **Advanced**
  - **Screen time** - Displays the amount of time the app has displayed on the screen.
  - **Battery** - Lists the amount of computing power used by the app.
  - **Open by default** - If you have configured an app to launch certain file types by default, you can clear that setting here.
  - **Display over other apps** - Allows an app to display on top of other apps.
  - **App details** - Provides a link to additional app details on the Play store.
  - **Additional settings in the app** - Opens settings in the app.
  - **Modify system settings** - Allows an app to modify the system settings.

Managing Downloads

Files and apps downloaded using the Browser or Email are stored on the USB drive or Internal storage in the Download directory. Use the Downloads app to view, open, or delete downloaded items. Files and apps downloaded using the Browser or Email are stored on the microSD card or Internal storage in the Download directory. Use the Downloads app to view, open, or delete downloaded items. Files and apps downloaded using the Browser or Email are stored in Internal storage in the Download directory. Use the Downloads app to view, open, or delete downloaded items.

1. Swipe the screen up and touch .
2. Touch > **Downloads**.
3. Touch and hold an item to delete, and then touch .

   The item is deleted from the device.

Maintenance and Troubleshooting

This section includes instructions on cleaning and storing the device, and provides troubleshooting solutions for potential problems during operation.

Maintaining the Device

For trouble-free service, observe the following tips when using the device:

- To avoid scratching the screen, use the supplied stylus or plastic-tipped pens intended for use with a touch-sensitive screen. Never use an actual pen or pencil or other sharp object on the surface of the device screen.
- The touch-sensitive screen of the device is glass. Do not drop the device or subject it to strong impact.
- Protect the device from temperature extremes. Do not leave it on the dashboard of a car on a hot day, and keep it away from heat sources.
- Do not store the device in any location that is dusty, damp, or wet.
- Use a soft lens cloth to clean the device. If the surface of the device screen becomes soiled, clean it with a soft cloth moistened with an approved cleanser. For a list of approved cleansers, see Approved Cleaning and Disinfectant Agents or Approved Cleaning and Disinfectant Agents for TC52-HC.
- Periodically replace the rechargeable battery to ensure maximum battery life and product performance. Battery life depends on individual usage patterns.

Display Best Practices

Image Retention

Image retention may occur when a static image continuously displays for extended periods of time. A user may see a faint remnant of the image even after a new image displays. To prevent image retention:

- Set the display to turn off after a few minutes of idle time.
- Rotate background images on a periodic basis.
- Turn off the display when the device in not in use.

- Use a screen saver with the following characteristics:
  - background color set to black
  - use a small moving image (approximately 2% of the display size).
  - move the image randomly across the screen
  - screen saver should be active as long as the static image is used.

Best Practices for Enterprise Mobile Computing Devices Operating in Hot Environments and Direct Sunlight

Exceeding the operating temperature by external hot environments will cause the device's thermal sensor to notify the user of a shutdown of the WAN modem or shutdown the device until the device's temperature returns to the operational temperature range.

- Avoid direct sunlight to the device - The easiest way to prevent overheating is to keep the device out of direct sunlight. The device absorbs light and heat from the sun and retains it, getting hotter the longer it remains in sunlight and heat.
- Avoid leaving the device in a vehicle on a hot day or hot surface - Similar to leaving the device out in direct sunlight, the device will also absorb the thermal energy from a hot surface or when left on the dashboard of a vehicle or seat, getting warmer the longer it remains on the hot surface or inside the hot vehicle.
- Turn off unused apps on the device. Open, unused apps running in the background can cause the device to work harder, which in turn may cause it to heat up. This will also improve your mobile computer device's battery life performance.
- Avoid turning your screen brightness up - Just the same as running background apps, turning your brightness up will force your battery to work harder and create more heat. Minimizing your screen brightness may extend operating the mobile computer device in hot environments.

Battery Safety Guidelines

To use the device safely, you must follow the battery guidelines.

- The area in which the units are charged should be clear of debris and combustible materials or chemicals. Particular care should be taken when the device is charged in a non-commercial environment.
- Follow the battery usage, storage, and charging guidelines found in this guide.
- Improper battery use may result in a fire, explosion, or other hazard.
- To charge the mobile device battery, the ambient battery and charger temperatures must be from 5°C to 40°C (41°F to 104°F).
- Do not use incompatible batteries and chargers, including non-Zebra batteries and chargers. Use of an incompatible battery or charger may present a risk of fire, explosion, leakage, or other hazard. If you have any questions about the compatibility of a battery or a charger, contact the Global Customer Support Center.
- For devices that utilize a USB port as a charging source, the device shall only be connected to products that bear the USB-IF logo or have completed the USB-IF compliance program.
- Do not disassemble, open, crush, bend, deform, puncture, or shred the battery.

- Severe impact from dropping any battery-operated device on a hard surface could cause the battery to overheat.
- Do not short-circuit a battery or allow metallic or conductive objects to contact the battery terminals.
- Do not modify or remanufacture, attempt to insert foreign objects into the battery, immerse or expose to water or other liquids, or expose to fire, explosion, or other hazard.
- Do not leave or store the equipment in or near areas that might get very hot, such as in a parked vehicle or near a radiator or other heat source. Do not place a battery into a microwave oven or dryer.
- Battery usage by children should be supervised.
- Please follow local regulations to properly dispose of used rechargeable batteries.
- Do not dispose of batteries in a fire.
- Seek medical advice immediately if a battery has been swallowed.
- In the event of a battery leak, do not allow the liquid to come in contact with the skin or eyes. If contact has been made, wash the affected area with water for 15 minutes, and seek medical advice.
- If you suspect damage to your equipment or battery, contact Customer Support to arrange for inspection.

Cleaning Instructions

CAUTION: Always wear eye protection. Read warning label on alcohol product before using. If you have to use any other solution for medical reasons please contact the Global Customer Support Center for more information.

WARNING: Avoid exposing this product to contact with hot oil or other flammable liquids. If such exposure occurs, unplug the device and clean the product immediately in accordance with these guidelines.

Cleaning and Disinfecting Guidelines

- Turn off and/or disconnect the device from AC/DC power.
- To avoid damage to the device or accessory, use only approved cleaning and disinfecting agents specified for the device.
- Follow the manufacturer’s directions on the approved cleaning and disinfecting agent for how to use their product properly and safely.
- Use pre-moistened wipes or dampen a soft sterile cloth (not wet) with the approved agent. Never spray or pour chemical agents directly onto the device.
- Use a moistened cotton-tipped applicator to reach tight or inaccessible areas. Be sure to remove any lint left over by the applicator.
- Do not allow liquid to pool.
- Allow the device to air dry before use, or dry with a soft lint-free cloth or towelette. Ensure electrical contacts are fully dry before reapplying power

Approved Cleaning and Disinfectant Agents

100% of the active ingredients in any cleaner must consist of one or some combination of the following: isopropyl alcohol, bleach/sodium hypochlorite[1] (see important note below), hydrogen peroxide, ammonium chloride or mild dish soap.

IMPORTANT:

Use pre-moistened wipes and do not allow liquid cleaner to pool.

[1]When using sodium hypochlorite (bleach) based products always follow the manufacturer's recommended instructions: use gloves during application and remove the residue afterwards with a damp alcohol cloth or a cotton swab to avoid prolonged skin contact while handling the device. Due to the powerful oxidizing nature of sodium hypochlorite the metal surfaces on the device are prone to oxidation (corrosion) when exposed to this chemical in the liquid form (including wipes).

In the event that these type of disinfectants come in contact with metal on the device, prompt removal with an alcohol-dampened cloth or cotton swab after the cleaning step is critical.

Approved Cleaning and Disinfectant Agents for TC52-HC

For detailed information on approved cleaning and disinfectant agents for theTC52-HC configuration, go to: zebra.com/tc5x-hc-cleaning.

Special Cleaning Notes

The device should not be handled while wearing vinyl gloves containing phthalates, or before hands are washed to remove contaminant residue after gloves are removed.

If products containing any of the harmful ingredients listed above are used prior to handling the device, such as hand sanitizer that contain ethanolamine, hands must be completely dry before handling the device to prevent damage to the device.

IMPORTANT: If the battery connectors are exposed to cleaning agents, thoroughly wipe off as much of the chemical as possible and clean with an alcohol wipe. It is also recommended to install the battery in the terminal prior to cleaning and disinfecting the device to help minimize buildup on the connectors.

When using cleaning/disinfectant agents on the device, it is important to follow the directions prescribed by the cleaning/disinfectant agent manufacturer.

Cleaning Frequency

The cleaning frequency is at the customer's discretion due to the varied environments in which the mobile devices are used and may be cleaned as frequently as required. When dirt is visible, it is recommended to clean the mobile device to avoid the build-up of particles which make the device more difficult to clean later on.

For consistency and optimum image capture, it is recommended to clean the camera window periodically, especially when used in environments prone to dirt or dust.

Cleaning the Device

The section provides information for cleaning the device.

Housing

Thoroughly wipe the housing, including all buttons and triggers, using an approved alcohol wipe.

Display

The display can be wiped down with an approved alcohol wipe, but care should be taken not to allow any pooling of liquid around the edges of the display. Immediately dry the display with a soft, non-abrasive cloth to prevent streaking.

Camera and Exit Window

Wipe the camera and exit window periodically with a lens tissue or other material suitable for cleaning optical material such as eyeglasses.

Battery Guide Slots

Insert a cotton-tipped applicator dipped in alcohol into the battery guide rails to clean out debris and then dry with a dry cotton-tipped applicator.

Cleaning the Battery Connector and Locating Magnet

To clean the battery connectors and locating magnet:

1. Remove the main battery from the mobile computer.

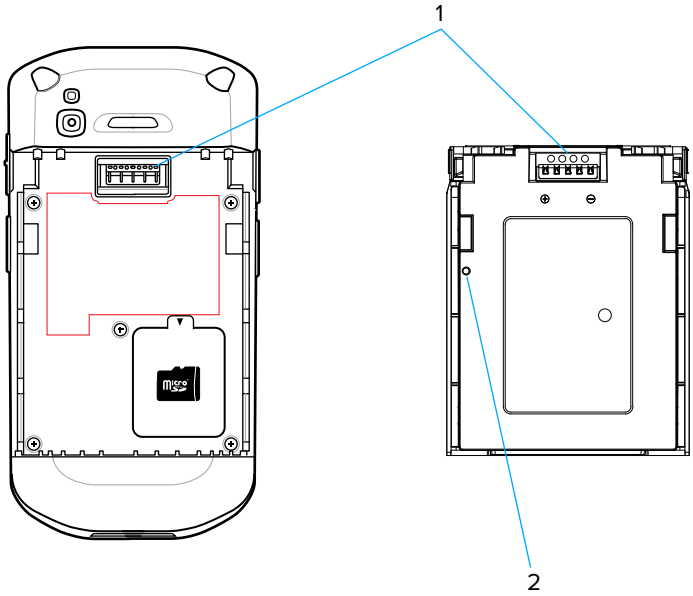

1	Battery connectors
2	Locating magnet

2. Dip the cotton portion of the cotton-tipped applicator in isopropyl alcohol.
3. To remove any grease or dirt, rub the cotton portion of the cotton-tipped applicator back-and-forth across the locating magnet and the connectors on the battery and terminal sides. Do not leave any cotton residue on the connectors or magnet.
4. Repeat at least three times.
5. Use a dry cotton-tipped applicator and repeat steps 3 and 4. Do not leave any cotton residue on the connectors or magnet.
6. Inspect the area for any grease or dirt and repeat the cleaning process if necessary.

CAUTION: After cleaning the battery connectors or locating magnet with bleach-based chemicals, follow the Battery Connector and Locator Magnet Cleaning instructions to remove bleach from the connectors and locating magnet.

Cleaning Cradle Connectors

To clean the connectors on a cradle:

1. Remove the DC power cable from the cradle.
2. Dip the cotton portion of the cotton-tipped applicator in isopropyl alcohol.
3. Rub the cotton portion of the cotton-tipped applicator along the pins of the connector. Slowly move the applicator back-and-forth from one side of the connector to the other. Do not leave any cotton residue on the connector.
4. All sides of the connector should also be rubbed with the cotton-tipped applicator.
5. Remove any lint left by the cotton-tipped applicator.
6. If grease and other dirt can be found on other areas of the cradle, use a lint-free cloth and alcohol to remove.
7. Allow at least 10 to 30 minutes (depending on ambient temperature and humidity) for the alcohol to air dry before applying power to cradle.
8. If the temperature is low and humidity is high, longer drying time is required. Warm temperature and low humidity requires less drying time.

CAUTION: After cleaning the cradle connectors with bleach-based chemicals, follow the Cleaning Cradle Connectors instructions to remove bleach from the connectors.

Troubleshooting

This section provides information for resetting and troubleshooting the device and accessories.

Resetting the Device

There are two reset functions, soft reset and hard reset.

Performing a Soft Reset

Perform a soft reset if applications stop responding.

1. Press and hold the Power button until the menu appears.

2. Touch **Restart**.
3. The device reboots.

Performing a Hard Reset

Perform a hard reset if the device stops responding.

CAUTION: Performing a hard reset with a microSD card installed in the device may cause damage or data corruption to the microSD card.

1. Simultaneously press the Power, left scan, and Volume Up buttons for at least four seconds.
2. When the screen turns off, release the buttons.
3. The device reboots.

Device Troubleshooting

Provides solutions to common device issues.

Table 26 Troubleshooting the Device

Problem	Cause	Solution
After installing the battery, the device does not boot up.	Power button was not pressed.	Press the Power button.
When pressing the power button the device does not turn on.	Battery not charged.	Charge or replace the battery in the device.
	Battery not installed properly.	Install the battery properly.
	System crash.	Perform a reset.
When pressing the power button the device does not turn on but two LEDs blink.	Battery charge is at a level where data is maintained but battery should be re-charged.	Charge or replace the battery in the device.
Battery did not charge.	Battery failed.	Replace battery. If the device still does not operate, perform a reset.
	Device removed from cradle while battery was charging.	Insert device in cradle. See Charging the Device.
	Extreme battery temperature.	Battery does not charge if ambient temperature is below 5°C (41°F) or above 40°C (104°F).
Cannot see characters on display.	Device not powered on.	Press the Power button.
During data communication with a host computer, no data transmitted, or transmitted data was incomplete.	Device removed from cradle or disconnected from host computer during communication.	Replace the device in the cradle, or reattach the communication cable and re-transmit.
	Incorrect cable configuration.	See the system administrator.
	Communication software was incorrectly installed or configured.	Perform setup.

Table 26 Troubleshooting the Device (Continued)

Problem	Cause	Solution
During data communication over Wi-Fi, no data transmitted, or transmitted data was incomplete.	Wi-Fi radio is not on.	Turn on the Wi-Fi radio.
	You moved out of range of an access point.	Move closer to an access point.
During data communication over Bluetooth, no data transmitted, or transmitted data was incomplete.	Bluetooth radio is not on.	Turn on the Bluetooth radio.
	You moved out of range of another Bluetooth device.	Move within 10 meters (32.8 feet) of the other device.
No sound.	Volume setting is low or turned off.	Adjust the volume.
Device shuts off.	Device is inactive.	The display turns off after a period of inactivity. Set this period to 15 seconds, 30 seconds, 1, 2, 5, 10 or 30 minutes.
	Battery is depleted.	Replace the battery.
Tapping the window buttons or icons does not activate the corresponding feature.	The device is not responding.	Reboot the device.
A message appears stating that the device memory is full.	Too many files stored on the device.	Delete unused memos and records. If necessary, save these records on the host computer (or use an SD card for additional memory).
	Too many applications installed on the device.	Remove user-installed applications on the device to recover memory. Select **Settings** > **Apps & notifications**. Select the app in the list and select **UNINSTALL**.
The device does not decode with reading barcode.	Scanning application is not loaded.	Load a scanning application on the device or enable DataWedge. See the system administrator.
	Unreadable barcode.	Ensure the symbol is not defaced.
	Distance between exit window and barcode is incorrect.	Place the device within proper scanning range.
	Device is not programmed for the barcode.	Program the device to accept the type of barcode being scanned. Refer to the EMDK or DataWedge application.
	Device is not programmed to generate a beep.	If the device does not beep on a good decode, set the application to generate a beep on good decode.

Table 26 Troubleshooting the Device (Continued)

Problem	Cause	Solution
	Battery is low.	If the scanner stops emitting a laser beam upon a trigger press, check the battery level. When the battery is low, the scanner shuts off before the device low battery condition notification. Note: If the scanner is still not reading symbols, contact the distributor or the Global Customer Support Center.
Device cannot find any Bluetooth devices nearby.	Too far from other Bluetooth devices.	Move closer to the other Bluetooth device(s), within a range of 10 meters (32.8 feet).
	The Bluetooth device(s) nearby are not turned on.	Turn on the Bluetooth device(s) to find.
	The Bluetooth device(s) are not in discoverable mode.	Set the Bluetooth device(s) to discoverable mode. If needed, refer to the device's user documentation for help.
Cannot unlock device.	User enters incorrect password.	If the user enters an incorrect password five times, the user is requested to wait for 30 seconds when using a PIN, Pattern or Password.

1-Slot Charge Only Cradle Troubleshooting

The table below provides troubleshooting options for the cradle.

Table 27 Troubleshooting the 1-Slot Charge Only Cradle

Problem	Cause	Solution
LEDs do not light when device is inserted.	Cradle is not receiving power.	Ensure the power cable is connected securely to both the cradle and to AC power.
	Device is not seated firmly in the cradle.	Remove and re-insert the device into the cradle, ensuring it is firmly seated.
Device battery is not charging.	Device was removed from cradle or cradle was unplugged from AC power too soon.	Ensure cradle is receiving power. Ensure device is seated correctly. Confirm main battery is charging. The battery charges from fully depleted to 90% in approximately 2.5 hours and from fully depleted to 100% in approximately three hours.
	Battery is faulty.	Verify that other batteries charge properly. If so, replace the faulty battery.

Table 27 Troubleshooting the 1-Slot Charge Only Cradle (Continued)

Problem	Cause	Solution
	The device is not fully seated in the cradle.	Remove and re-insert the device into the cradle, ensuring it is firmly seated.
	Extreme battery temperature.	Battery does not charge if ambient temperature is below 5°C (41°F) or above 40°C (104°F).

1-Slot Workstation Docking Cradle Troubleshooting

The table below provides troubleshooting options for the cradle.

Table 28 Troubleshooting the 1-Slot Workstation Docking Cradle

Problem	Cause	Solution
LEDs do not light when device is inserted.	Cradle is not receiving power.	Ensure the power cable is connected securely to both the cradle and to AC power.
	Device is not seated firmly in the cradle.	Remove and re-insert the device into the cradle, ensuring it is firmly seated.
Device battery is not charging.	Device was removed from cradle or cradle was unplugged from AC power too soon.	Ensure cradle is receiving power. Ensure device is seated correctly. Confirm main battery is charging. The battery charges from fully depleted to 90% in approximately 2.5 hours and from fully depleted to 100% in approximately three hours.
	Battery is faulty.	Verify that other batteries charge properly. If so, replace the faulty battery.
	The device is not fully seated in the cradle.	Remove and re-insert the device into the cradle, ensuring it is firmly seated.
	Extreme battery temperature.	Battery does not charge if ambient temperature is below 5°C (41°F) or above 40°C (104°F).
External monitor is not detected.	The device is powered off when placed in the cradle and then turned on.	Remove the device from the cradle and re-insert. The device will then detect the monitor.
Display does not change orientation quickly.	It takes a little time for the device to recognize the monitor.	Wait for screen to re-orientate.
Devices does not switch to landscape mode.	Device not detecting monitor.	Remove the device from the cradle and re-insert.
	Display setting not set properly.	Go to **Settings** > **Display** > **When device detects external monitor**. Ensure Rotate screen orientation is selected.

Table 28 Troubleshooting the 1-Slot Workstation Docking Cradle (Continued)

Problem	Cause	Solution
Peripheral not detected.	Bad cable connection.	Remove cable and re-connect.

2-Slot USB/Ethernet Cradle Troubleshooting

The table below provides troubleshooting options for the cradle.

Table 29 Troubleshooting the 2-Slot USB/Ethernet Cradle

Problem	Cause	Solution
LEDs do not light when device or spare battery is inserted.	Cradle is not receiving power.	Ensure the power cable is connected securely to both the cradle and to AC power.
	Device is not seated firmly in the cradle.	Remove and re-insert the device into the cradle, ensuring it is firmly seated.
	Spare battery is not seated firmly in the cradle.	Remove and re-insert the spare battery into the charging slot, ensuring it is firmly seated.
Device battery is not charging.	Device was removed from cradle or cradle was unplugged from AC power too soon.	Ensure cradle is receiving power. Ensure device is seated correctly. Confirm main battery is charging. The battery charges from fully depleted to 90% in approximately 2.5 hours and from fully depleted to 100% in approximately three hours.
	Battery is faulty.	Verify that other batteries charge properly. If so, replace the faulty battery.
	The device is not fully seated in the cradle.	Remove and re-insert the device into the cradle, ensuring it is firmly seated.
	Extreme battery temperature.	Battery does not charge if ambient temperature is below 5°C (41°F) or above 40°C (104°F).
Spare battery is not charging.	Battery not fully seated in charging slot.	Remove and re-insert the spare battery in the cradle, ensuring it is firmly seated. The battery charges from fully depleted to 90% in approximately 2.5 hours and from fully depleted to 100% in approximately three hours.
	Battery inserted incorrectly.	Re-insert the battery so the charging contacts on the battery align with the contacts on the cradle.

Table 29 Troubleshooting the 2-Slot USB/Ethernet Cradle (Continued)

Problem	Cause	Solution
	Battery is faulty.	Verify that other batteries charge properly. If so, replace the faulty battery.

5-Slot Charge Only Cradle Troubleshooting

The table below provides troubleshooting options for the cradle.

Table 30 Troubleshooting the 5-Slot Charge Only Cradle

Problem	Cause	Solution
Battery is not charging.	Device removed from the cradle too soon.	Replace the device in the cradle. The battery charges from fully depleted to 90% in approximately 2.5 hours and from fully depleted to 100% in approximately three hours.
	Battery is faulty.	Verify that other batteries charge properly. If so, replace the faulty battery.
	Device is not inserted correctly in the cradle.	Remove the device and reinsert it correctly. Verify charging is active. Touch **Settings** > **System** > **About phone** > **Status** to view battery status.
	Ambient temperature of the cradle is too warm.	Move the cradle to an area where the ambient temperature is between 5°C (+41°F) and +40°C (+104°F).

5-Slot Ethernet Cradle Troubleshooting

The table below provides troubleshooting options for the cradle.

Table 31 Troubleshooting the 5-Slot Ethernet Cradle

Problem	Cause	Solution
During communication, no data transmits, or transmitted data was incomplete.	Device removed from cradle during communications.	Replace device in cradle and retransmit.
	Incorrect cable configuration.	Ensure that the correct cable configuration.
	Device has no active connection.	An icon is visible in the status bar if a connection is currently active.

Table 31 Troubleshooting the 5-Slot Ethernet Cradle (Continued)

Problem	Cause	Solution
Battery is not charging.	Device removed from the cradle too soon.	Replace the device in the cradle. The battery charges from fully depleted to 90% in approximately 2.5 hours and from fully depleted to 100% in approximately three hours.
	Battery is faulty.	Verify that other batteries charge properly. If so, replace the faulty battery.
	Device is not inserted correctly in the cradle.	Remove the device and reinsert it correctly. Verify charging is active. Touch **Settings** > **System** > **About phone** > **Status** to view battery status.
	Ambient temperature of the cradle is too warm.	Move the cradle to an area where the ambient temperature is between 5°C (+41°F) and +40°C (+104°F).

4-Slot Battery Charger Troubleshooting

The table below provides troubleshooting options for the charger.

Table 32 Troubleshooting the 4-Slot Battery Charger

Problem	Cause	Solution
Spare Battery Charging LED does not light when spare battery is inserted.	Spare battery is not correctly seated.	Remove and re-insert the spare battery into the charging slot, ensuring it is correctly seated.
Spare Battery not charging.	Charger is not receiving power.	Ensure the power cable is connected securely to both the charger and to AC power.
	Spare battery is not correctly seated.	Remove and re-insert the battery into the battery adapter, ensuring it is correctly seated.
	Battery adapter is not seated properly.	Remove and re-insert the battery adapter into the charger, ensuring it is correctly seated.
	Battery was removed from the charger or charger was unplugged from AC power too soon.	Ensure charger is receiving power. Ensure the spare battery is seated correctly. The battery charges from fully depleted to 90% in approximately 2.5 hours and from fully depleted to 100% in approximately three hours.
	Battery is faulty.	Verify that other batteries charge properly. If so, replace the faulty battery.

Table 32 Troubleshooting the 4-Slot Battery Charger (Continued)

Problem	Cause	Solution
	Ambient temperature of the cradle is too warm.	Move the cradle to an area where the ambient temperature is between 5°C (+41°F) and +40°C (+104°F).

Technical Specifications

For device technical specifications, go to zebra.com/us/en/products/spec-sheets/mobile-computers/handheld/tc52-tc57.html.

SE4710 Decode Distances

The following table provide the decode distances for the SE4710 scan engine.

Table 33 SE4710 Decode Distances

Symbol Density/ Bar Code Type	Typical Working Ranges	
	Near	Far
4 mil Code 39	8.4 cm (3.3 in.)	22.4 cm (8.8 in.)
5.0 mil Code 128	7.1 cm (2.8 in.)	20.8 cm (8.2 in.)
5 mil Code 39	5.08 cm (2.0 in.)	34.3 cm (13.5 in.)
5 mil PDF417	7.9 cm (3.1 in.)	21.3 cm (8.4 in.)
10 mil Data Matrix	7.4 cm (2.9 in.)	25.7 cm (10.1 in.)
100% UPCA	4.6 cm* (1.8 in.)	66.0 cm (26.0 in.)
20 mil Code 39	5.08 cm* (2.0 in.)	76.2 cm (30.0 in.)
20 mil QR Code	8.1 cm (3.2 in.)	40.1 cm (15.8 in.)

*Limited by width of bar code in field of view.

Notes: Photographic quality bar code at 15° tilt pitch angle under 30 fcd ambient illumination.

Distances measured from front edge of scan engine chassis.

I/O Connector Pin-Outs

Describes the pin-outs for the 7-pin I/O connector.

Figure 55 I/O Connector Pin-Outs

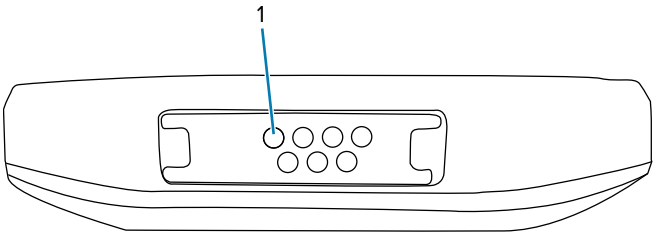

Table 34 I/O Connector Pin-Outs

Pin	Signal	Description
1	VBUS	USB Power Input
2	D-	USB Data-
3	CC	USB Type C Control
4	GND	Ground
5	D+	USB Data+
6	Not used	Not used
7	ID	Cradle ID

1-Slot Charge Only Cradle Technical Specifications

This section provides technical specifications for the 1-slot Charge Only Cradle.

Table 35 1-Slot Charge Only Cradle Technical Specifications

Item	Description
Dimensions	Height: 9.9 cm (3.9 in.) Width: 9.8 cm (3.86 in.) Depth: 13.3 cm (5.24 in.)
Weight	378 g (13.3 oz.)
Input Voltage	12 VDC
Power Consumption	up to 15 watts
Operating Temperature	0°C to 50°C (32°F to 122°F)
Storage Temperature	-40°C to 70°C (-40°F to 158°F)
Charging Temperature	5°C to 40°C (41°F to 104°F)
Humidity	5% to 95% non-condensing

Table 35 1-Slot Charge Only Cradle Technical Specifications (Continued)

Item	Description
Drop	76.2 cm (30.0 in.) drops to vinyl tiled concrete at room temperature.
Electrostatic Discharge (ESD)	+/- 20kV air /- 10 kV contact /- 10 kV indirect discharge

1-Slot Workstation Docking Cradle Technical Specifications

This section provides technical specifications for the 1-slot Workstation Docking Cradle.

Table 36 1-Slot Workstation Docking Cradle Technical Specifications

Item	Description
Dimensions	Height: 9.9 cm (3.9 in.) Width: 9.8 cm (3.86 in.) Depth: 13.3 cm (5.24 in.)
Weight	378 g (13.3 oz.)
Input Voltage	12 VDC
Power Consumption	up to 15 watts
Operating Temperature	0°C to 40°C (32°F to 104°F)
Storage Temperature	-40°C to 70°C (-40°F to 158°F)
Charging Temperature	5°C to 40°C (41°F to 104°F)
Humidity	5% to 95% non-condensing
Drop	76.2 cm (30.0 in.) drops to vinyl tiled concrete at room temperature.
Electrostatic Discharge (ESD)	+/- 20kV air +/- 10 kV contact +/- 10 kV indirect discharge

2-Slot USB/Ethernet Cradle Technical Specifications

This section provides technical specifications for the 2-slot USB/Ethernet Cradle.

Table 37 2-Slot USB/Ethernet Cradle Technical Specifications

Item	Description
Dimensions	Height: 8.9 cm (3.5 in.) Width: 16.0 cm (6.3 in.) Depth: 13.0 cm (5.12 in.)
Weight	470 g (16.6 oz.)
Input Voltage	12 VDC
Power Consumption	up to 12 watts
Operating Temperature	0°C to 40°C (32°F to 104°F)
Storage Temperature	-40°C to 70°C (-40°F to 158°F)
Charging Temperature	5°C to 40°C (41°F to 104°F)
Humidity	5% to 95% non-condensing
Drop	75.0 cm (30.0 in.) drops to vinyl tiled concrete at room temperature.
Electrostatic Discharge (ESD)	+/- 20kV air +/- 10 kV contact +/- 10 kV indirect discharge

4-Slot Charge Only Cradle with Battery Charger Technical Specifications

This section provides technical specifications for the 4-slot Charge Only Cradle with Battery Charger.

Table 38 4-Slot Charge Only Cradle with Battery Charger Technical Specifications

Item	Description
Dimensions	Height: 10.6 cm (4.17 in.) Width: 48.9 cm (19.25 in.) Depth: 13.3 cm (5.24 in.)
Weight	2,020 g (71.3 oz.)
Input Voltage	12 VDC
Power Consumption	up to 95 watts
Operating Temperature	0°C to 50°C (32°F to 122°F)
Storage Temperature	-40°C to 70°C (-40°F to 158°F)
Charging Temperature	5°C to 40°C (41°F to 104°F)
Humidity	5% to 95% non-condensing

Table 38 4-Slot Charge Only Cradle with Battery Charger Technical Specifications (Continued)

Item	Description
Drop	76.2 cm (30.0 in.) drops to vinyl tiled concrete at room temperature.
Electrostatic Discharge (ESD)	+/- 20kV air /- 10 kV contact +/- 10 kV indirect discharge

5-Slot Charge Only Cradle Technical Specifications

This section provides technical specifications for the 5-slot Charge Only Cradle.

Table 39 5-Slot Charge Only Cradle Technical Specifications

Item	Description
Dimensions	Height: 10.6 cm (4.17 in.) Width: 48.9 cm (19.25 in.) Depth: 13.3 cm (5.24 in.)
Weight	1,937 g (68 oz.)
Input Voltage	12 VDC
Power Consumption	up to 65 watts
Operating Temperature	0°C to 50°C (32°F to 122°F)
Storage Temperature	-40°C to 70°C (-40°F to 158°F)
Charging Temperature	5°C to 40°C (41°F to 104°F)
Humidity	5% to 95% non-condensing
Drop	76.2 cm (30.0 in.) drops to vinyl tiled concrete at room temperature.
Electrostatic Discharge (ESD)	+/- 20kV air /- 10 kV contact +/- 10 kV indirect discharge

5-Slot Ethernet Cradle Technical Specifications

This section provides technical specifications for the 5-slot Ethernet Cradle.

Table 40 5-Slot Ethernet Cradle Technical Specifications

Item	Description
Dimensions	Height: 10.6 cm (4.17 in.) Width: 48.9 cm (19.25 in.) Depth: 13.3 cm (5.24 in.)
Weight	2,010 g (71 oz.)
Input Voltage	12 VDC
Power Consumption	up to 70 watts
Operating Temperature	0°C to 50°C (32°F to 122°F)
Storage Temperature	-40°C to 70°C (-40°F to 158°F)
Charging Temperature	5°C to 40°C (41°F to 104°F)
Humidity	5% to 95% non-condensing
Drop	76.2 cm (30.0 in.) drops to vinyl tiled concrete at room temperature.
Electrostatic Discharge (ESD)	+/- 20kV air /- 10 kV contact /- 10 kV indirect discharge

4-Slot Battery Charger Technical Specifications

This section provides technical specifications for the 4-slot Battery Charger.

Table 41 4-Slot Battery Charger Technical Specifications

Item	Description
Dimensions	Height: 9.7 cm (3.82 in.) Width: 9.8 cm (3.86 in.) Depth: 13.3 cm (5.24 in.)
Weight	450 g (15.9 oz.)
Input Voltage	12 VDC
Power Consumption	up to 48 watts
Operating Temperature	0°C to 50°C (32°F to 122°F)
Storage Temperature	-40°C to 70°C (-40°F to 158°F)
Charging Temperature	5°C to 40°C (41°F to 104°F)
Humidity	5% to 95% non-condensing

Table 41 4-Slot Battery Charger Technical Specifications (Continued)

Item	Description
Drop	76.2 cm (30.0 in.) drops to vinyl tiled concrete at room temperature.
Electrostatic Discharge (ESD)	+/- 20kV air /- 10 kV contact /- 10 kV indirect discharge

Trigger Handle Technical Specifications

This section provides technical specifications for the Trigger Handle.

Table 42 Trigger Handle Technical Specifications

Item	Description
Dimensions	Height: 13.1 cm (5.2 in.) Width: 8.2 cm (3.2 in.) Depth: 13.6 cm (5.4 in.)
Weight	120 g (4.2 oz.)
Input Voltage	12 VDC
Operating Temperature	-10°C to 50°C (14°F to 122°F)
Storage Temperature	-40°C to 70°C (-40°F to 158°F)
Humidity	5% to 95% non-condensing
Drop	1.5 m (5 feet) drops to concrete over temperature range.
Electrostatic Discharge (ESD)	+/- 20kV air /- 10 kV contact

Rugged Charge/USB Cable Technical Specifications

This section provides technical specifications for the Rugged Charge/USB Cable.

Table 43 Rugged Charge/USB Cable Technical Specifications

Item	Description
Length	164 +/- 6 cm (64.6 +/- 2.4 in.)
Input Voltage	5.0 VDC
Operating Temperature	-20°C to 50°C (-4°F to 122°F)
Storage Temperature	-40°C to 70°C (-40°F to 158°F)
Humidity	10% to 95% non-condensing

Table 43 Rugged Charge/USB Cable Technical Specifications (Continued)

Item	Description
Drop	76.2 cm (30.0 in.) drops to vinyl tiled concrete at room temperature.
Electrostatic Discharge (ESD)	+/- 20kV air /- 10 kV contact