INDUSTRIAL PRINTER

# ZT111

# User Guide

P1127107-03EN Rev D

Zebra Technologies | 3 Overlook Point | Lincolnshire, IL 60069 USA
zebra.com

2026/09/29

The Zebra wordmark and logo are trademarks of Zebra Technologies Corp., registered in many jurisdictions worldwide. All other trademarks are the property of their respective owners. ©2026 Zebra Technologies Corp. and/or its affiliates.

Information in this document is subject to change without notice. The software described in this document is furnished under a license agreement or nondisclosure agreement. The software may be used or copied only in accordance with the terms of those agreements.

For further information regarding legal and proprietary statements, please go to:

SOFTWARE: zebra.com/informationpolicy.
COPYRIGHTS: zebra.com/copyright.
PATENTS: ip.zebra.com.
WARRANTY: zebra.com/warranty.
END USER LICENSE AGREEMENT: zebra.com/eula.

# Terms of Use

## Proprietary Statement

This manual contains proprietary information of Zebra Technologies Corporation and its subsidiaries (“Zebra Technologies”). It is intended solely for the information and use of parties operating and maintaining the equipment described herein. Such proprietary information may not be used, reproduced, or disclosed to any other parties for any other purpose without the express, written permission of Zebra Technologies.

## Product Improvements

Continuous improvement of products is a policy of Zebra Technologies. All specifications and designs are subject to change without notice.

## Liability Disclaimer

Zebra Technologies takes steps to ensure that its published Engineering specifications and manuals are correct; however, errors do occur. Zebra Technologies reserves the right to correct any such errors and disclaims liability resulting therefrom.

## Limitation of Liability

In no event shall Zebra Technologies or anyone else involved in the creation, production, or delivery of the accompanying product (including hardware and software) be liable for any damages whatsoever (including, without limitation, consequential damages including loss of business profits, business interruption, or loss of business information) arising out of the use of, the results of use of, or inability to use such product, even if Zebra Technologies has been advised of the possibility of such damages. Some jurisdictions do not allow the exclusion or limitation of incidental or consequential damages, so the above limitation or exclusion may not apply to you.

# Contents

**Safety Instructions** ..... **6**

**Introduction** ..... **7**

Printer Components ..... 7

Control Panel ..... 9

**Printer Setup** ..... **10**

Selecting a Location for the Printer ..... 10

Ordering Supplies and Accessories ..... 11

Media ..... 11

Ribbon ..... 11

Inspecting the Contents of the Box ..... 13

Modifying or Viewing Secured Features ..... 15

Connecting the Printer to a Device ..... 16

Connect to a Phone or Tablet ..... 16

Installing Drivers and Connecting to a Windows-Based Computer ..... 16

Determining the Media Handling Method ..... 33

Loading the Media ..... 34

Inserting the Media into the Printer ..... 34

Using Tear-Off Mode ..... 39

Using Peel Mode ..... 42

Using Cutter Mode or Delayed Cut Mode ..... 46

Loading the Ribbon ..... 50

Printing a Test Label and Making Adjustments ..... 54

Installing Label Design Software ..... 56

**Printer Configuration and Adjustment** ..... **57**
Changing Printer Settings ..... 57
Changing Printer Settings through the Windows Driver ..... 57
Other Ways to Change Printer Settings ..... 58
Calibrating the Ribbon and Media Sensors ..... 77
Performing Auto Calibration ..... 77
Performing Manual Calibration ..... 77
Adjusting the Printhead Pressure ..... 81
Adjusting Ribbon Tension ..... 85

**Routine Maintenance** ..... **86**
Cleaning Schedule and Procedures ..... 86
Cleaning the Exterior, the Media Compartment, and the Sensors ..... 87
Cleaning the Printhead and Platen Roller ..... 87
Cleaning the Peel Assembly ..... 90
Cleaning and Lubricating the Cutter Module ..... 93
Removing Used Ribbon ..... 98
Replacing Printer Components ..... 99
Ordering Replacement Parts ..... 99
Recycling Printer Components ..... 99
Lubrication ..... 99

**Diagnostics and Troubleshooting** ..... **100**
Evaluating Barcode Quality ..... 100
Configuration Labels ..... 104
PAUSE Self-Test ..... 105
Sensor Profile ..... 106
Communication Diagnostics Test ..... 107
Loading Defaults or Last Saved Values ..... 108
Troubleshooting ..... 109
Indicator Lights ..... 109
Printing or Print Quality Issues ..... 112
Ribbon Issues ..... 116

Printer Connectivity Issues.....118
Communication Issues.....120
Miscellaneous Issues.....121
Servicing the Printer.....122
Shipping the Printer.....122

**Specifications.....123**
General Specifications.....123
Power Specifications.....123
Power Cord Specifications.....125
Communication Interface Specifications.....127
Standard Connections.....128
Optional Connections.....129
Wireless Specifications.....130
Print Specifications.....131
Media Specifications.....132
Ribbon Specifications.....133

**Glossary.....134**

# Safety Instructions

This document gives the safety instructions for ZT111.

- Please read and retain the User Guide for this equipment.

| |
|---|
| This equipment is not suitable for use in locations where children are likely to be present. |

**Table 1** Graphical Symbols

| Symbol | Explanation |
|---|---|
| | Hot parts |
| | Dangerous voltage |
| | Caution, risk of danger |
| | Protective conductive terminal |

- Connect equipment directly to and near supply mains.
- Connect equipment protective earthing conductor (via a power supply cord) to the main socket-outlet with protective earthing connection.
- This equipment is for indoor use **only.**
- Clean equipment according to section “Clearing Schedule and Procedure” in this document.

# Introduction

This section provides a high-level overview of the printer and its components.

## Printer Components

The components inside your printer are color-coded. The touch points that you will need to handle are colored gold inside the printers and are highlighted in gold in the illustrations in this manual.

There are various components inside the media compartment of your printer. Depending on the printer model and the installed options, your printer may look slightly different. The labeled components are mentioned in procedures throughout this manual.

**Figure 1** Printer Components

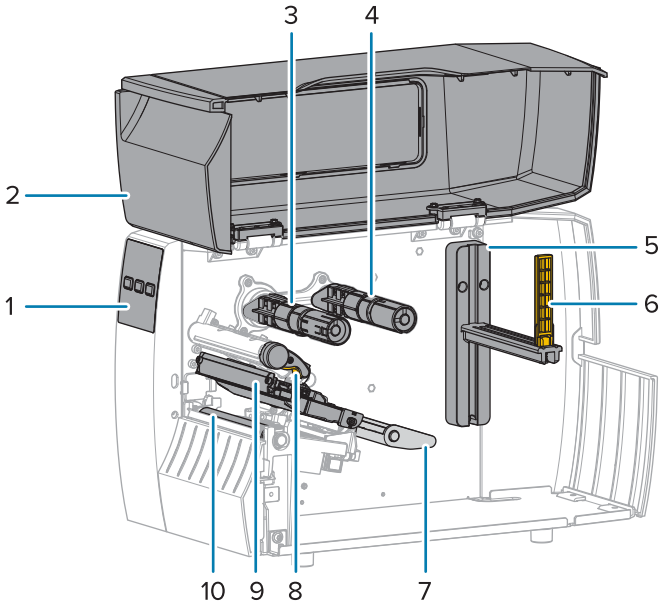


| | |
|---|---|
| 1 | Control panel |
| 2 | Media door |
| 3 | Ribbon take-up spindle* |
| 4 | Ribbon supply spindle* |

| | |
|---|---|
| 5 | Media supply hanger |
| 6 | Media supply guide |
| 7 | Media dancer assembly |
| 8 | Printhead assembly |
| 9 | Printhead-open lever |
| 10 | Platen roller |

* This component appears only in printers that have the Thermal Transfer option installed.

The two toggles on the toggle bar contain dials that are used to adjust printhead pressure. For more information see Adjusting the Printhead Pressure on page 81.

**Figure 2** Printhead Pressure Adjustment Dials

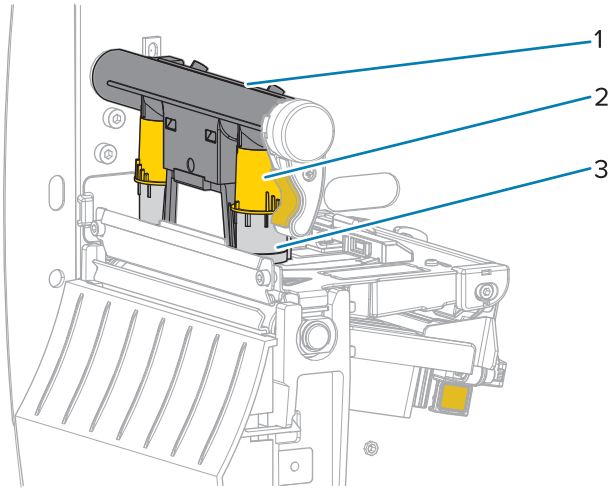


| | |
|---|---|
| 1 | Toggle bar |
| 2 | Printhead pressure adjustment dial |
| 3 | Toggle |

## Control Panel

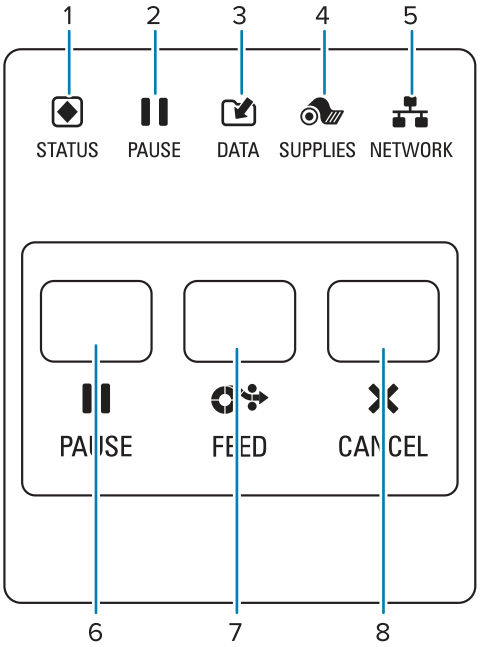


| | | |
|---|---|---|
| 1 | **STATUS** light | These indicator lights show the current status of the printer. For more information, see Indicator Lights on page 109. |
| 2 | **PAUSE** light | |
| 3 | **DATA** light | |
| 4 | **SUPPLIES** light | |
| 5 | **NETWORK** light | |
| 6 | The **PAUSE** button starts or stops printer operation when pressed. | |
| 7 | The **FEED** button forces the printer to feed one blank label each time the button is pressed. | |
| 8 | The **CANCEL** button cancels label formats when the printer is paused.<br>• Press once to cancel the next label format.<br>• Press and hold for 2 seconds to cancel all label formats. | |

# Printer Setup

This section assists a user with initial setup and operation of the printer.

## Selecting a Location for the Printer

Select a location for the printer that meets these conditions:

- Surface—The surface where the printer will be located must be solid, level, and of sufficient size and strength to hold the printer.

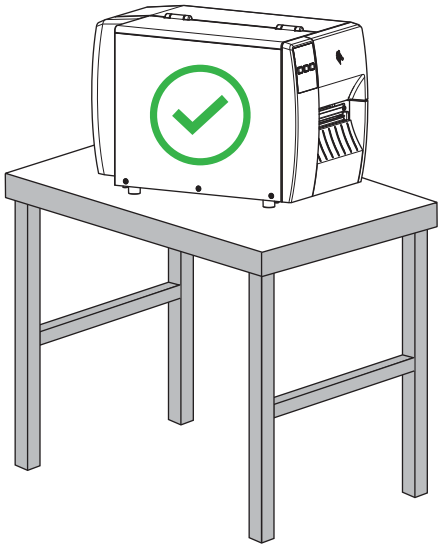

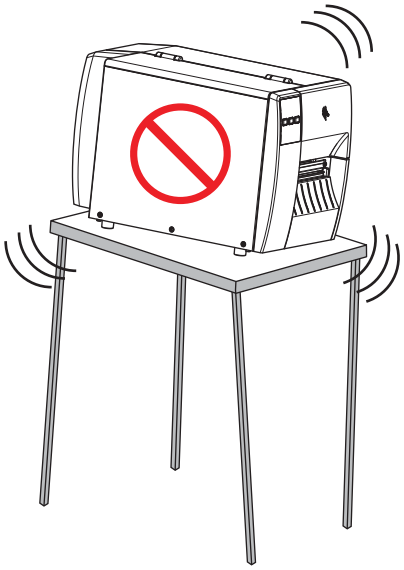

- Space—The area where the printer will be located must include enough space for ventilation and for accessing the printer components and connectors. To allow for proper ventilation and cooling, leave open space on all sides of the printer.

  **CAUTION:** Do not place any padding or cushioning material behind or under the printer because this restricts air flow and could cause the printer to overheat.

- Power—The printer should be within a short distance of an appropriate power outlet that is easily accessible.
- Data communication interfaces—The printer must be within range of your WLAN radio (if applicable) or within an acceptable range for other connectors to reach your data source (usually a computer).

For more information on maximum cable lengths and configuration, see Communication Interface Specifications on page 127.

- Operating conditions—The printer is designed to function in a wide range of environmental and electrical conditions, including a warehouse or factory floor. The following table shows the temperature and relative humidity requirements for the printer when it is operating.

**Table 2** Operating Temperature and Humidity

| Mode | Temperature | Relative Humidity |
|---|---|---|
| Thermal Transfer | 40° to 104°F (5° to 40°C) | 20 to 85% non-condensing |
| Direct Thermal | 32° to 104°F (0° to 40°C) | |

# Ordering Supplies and Accessories

You need to purchase certain supplies before you set up your printer, and you may choose to purchase accessories for the printer.

The following things that you will need do NOT come with the printer:

- Communication/network cables (such as serial or wired Ethernet) other than USB
- Media
- Ribbon (if your printer has a thermal transfer option)

For recommended supplies to ensure optimal operation of your printer, go to zebra.com/supplies.

## Media

The type and size of media that you choose should be appropriate for the options installed on the printer (see Determining the Media Handling Method on page 33. Refer to the media specifications for the printer for minimum label lengths and other important things to consider.

For optimal printing quality and proper printer performance across the product lines, Zebra strongly recommends the use of Zebra Certified Supplies as part of the total solution. A wide range of paper, polypropylene, polyester, and vinyl stock has been specifically engineered to enhance the printing capabilities of the printer and to prevent premature printhead wear. To purchase supplies, go to zebra.com/supplies.

The Glossary includes terms associated with media, such as black mark media, gap/notch media, fanfold media, and roll media. Use these terms to help determine which type of media will suit your needs.

**See Also**

ZT111 Specifications

## Ribbon

**NOTE:** This section applies only to printers that have the Thermal Transfer option installed.

| | |
|---|---|
| Do I need to use ribbon? | The media itself determines if you will need to use ribbon.<br>• Thermal Transfer media—Requires ribbon.<br>• Direct Thermal media—Does NOT require ribbon. |
| How can I tell if media is Direct Thermal or Thermal Transfer?<br>(See direct thermal on page 135 and thermal transfer on page 142 for definitions.) | The easiest way to find out is to scratch the surface of the media rapidly with your fingernail. If a black mark appears where you scratched, the media is Direct Thermal, so you do NOT need ribbon. |
| What kind of ribbon can I use? | This printer can use ONLY ribbon coated on the outside, unless you purchase and install the optional spindle that allows the use of ribbon coated on the inside. Contact your authorized Zebra reseller for ordering information. |
| How can I tell which side of the ribbon is coated? | Use one of these two methods to determine which side of the ribbon is coated:<br>• Performing an Adhesive Test.<br>• Performing a Ribbon Scratch Test. |

## Inspecting the Contents of the Box

Ensure that the printer box contains all the items you need to set it up.

**IMPORTANT:** Zebra Technologies is not responsible for any damage incurred during the shipment of the equipment and will not repair this damage under warranty.

1. Carefully remove the printer from the box.

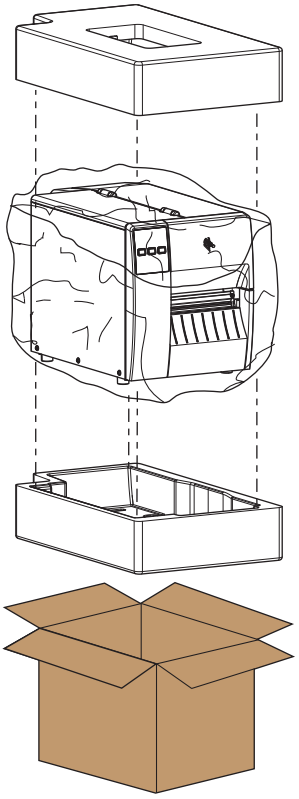

2. Verify that the following items are included in the box with the printer:

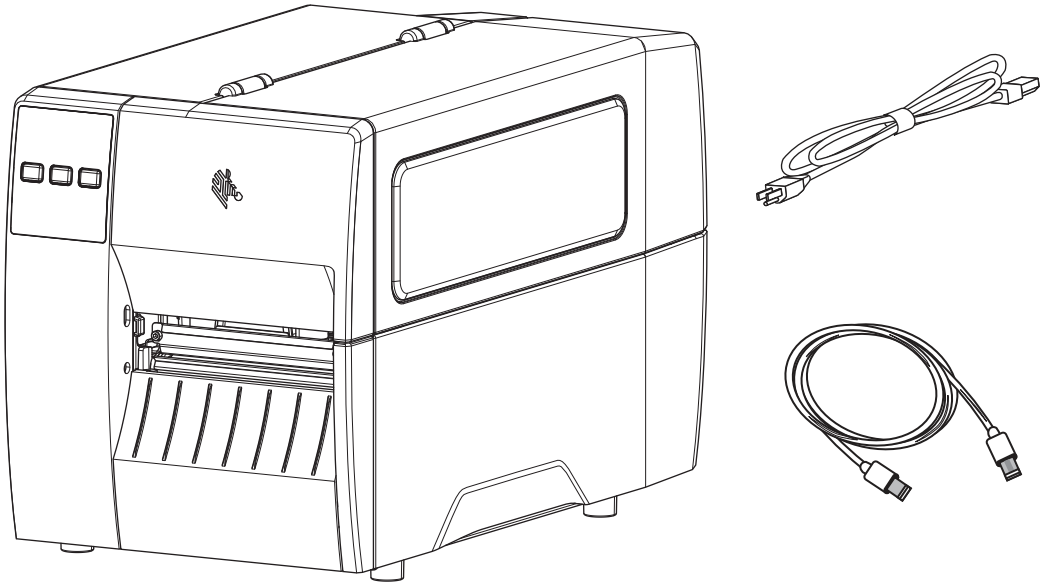

Additional items may be included, depending on the options ordered with the printer.

3. If anything is missing, notify your authorized Zebra reseller.
4. Immediately unwrap the printer and inspect for shipping damage.
   - Save all packing materials.
   - Check all exterior surfaces for damage.
   - Raise the media door, and inspect the media compartment for damage to components.
5. If you discover shipping damage upon inspection:
   - Immediately notify the shipping company and file a damage report.
   - Keep all packaging material for shipping company inspection.
   - Notify your authorized Zebra reseller.
6. The printer shipped with several protective items for shipping, including a film of plastic over the transparent window on the media door. Before operating the printer, remove these protective items.

## Modifying or Viewing Secured Features

Some features may be locked either by default or by choice, and you need to perform certain tasks before they can be modified.

### EU RED

If you purchased your printer within Europe, Middle Eastern, or African (EMEA) countries on or after August 1, 2025, the printer comes with specific security features to meet the EU Radio Equipment Directive (RED) requirements. As part of the setup process, you must set a Protected Mode password and configure Protected Mode before you can modify certain settings.

For more information, go to zebra.com/asr or refer to the Zebra Link-OS PrintSecure Printer Administration Guide.

### Protected Mode

For printers that already have Protected Mode set up, you need to enter the Protected Mode (admin) password to change certain settings on the printer. For more information, refer to the Zebra Link-OS PrintSecure Printer Administration Guide.

# Connecting the Printer to a Device

After you have set up the printer, you are ready to connect the printer to your device (such as a computer, phone, or tablet).

**NOTE:** If you purchased your printer in the EMEA region on or after August 1, 2025, go to Modifying or Viewing Secured Features on page 15.

## Connect to a Phone or Tablet

Download the free Zebra Printer Setup Utility app for your device.

- Android devices
- Apple devices

The applications support the following types of connectivity:

- Bluetooth Classic
- Bluetooth Low Energy (Bluetooth LE)
- Wired/Ethernet
- Wireless
- USB On-The-Go

For the User Guides for these printer setup utilities, go to zebra.com/setup.

## Installing Drivers and Connecting to a Windows-Based Computer

To use your printer with a Microsoft Windows-based computer, you must install the correct drivers first.

**IMPORTANT:** You may connect your printer to your computer using any of the connections that you have available. However, do not connect any cables from your computer to the printer until you are instructed to do so. If you connect them at the wrong time, your printer will not install the correct printer drivers. To recover from incorrect driver installation, see What to Do If You Forget to Install Printer Drivers First on page 28.

### Installing the Drivers

Follow these steps to install the correct drivers.

1. Navigate to zebra.com/drivers.
2. Click **Printers**.
3. Select your printer model.
4. On the printer product page, click **Drivers**.
5. Download the appropriate driver for Windows.

   The driver executable file (such as `zd86423827-certified.exe`) is added to your Download folder.
6. Run the executable file and follow the prompts.

   When setup is complete, you may select to add all of the drivers to your system (**Configure System**) or to add/configure specific printers (see Running the Printer Installation Wizard).

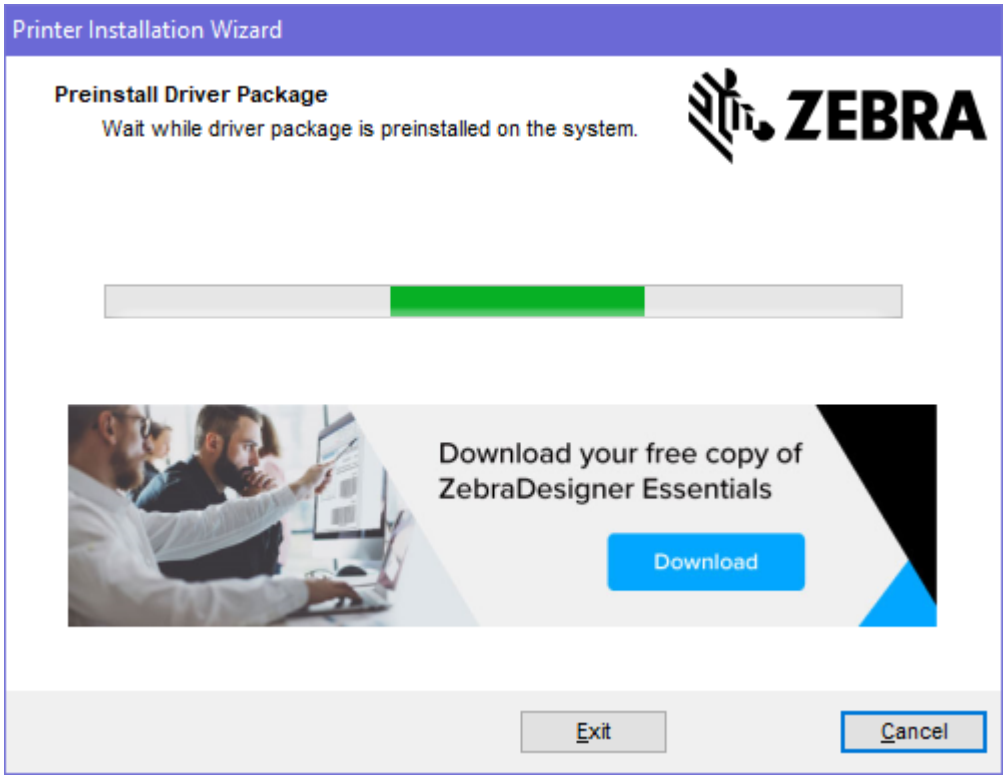


7. Select **Configure System**, and then click **Finish**.

   The Printer Installation Wizard installs the drivers.

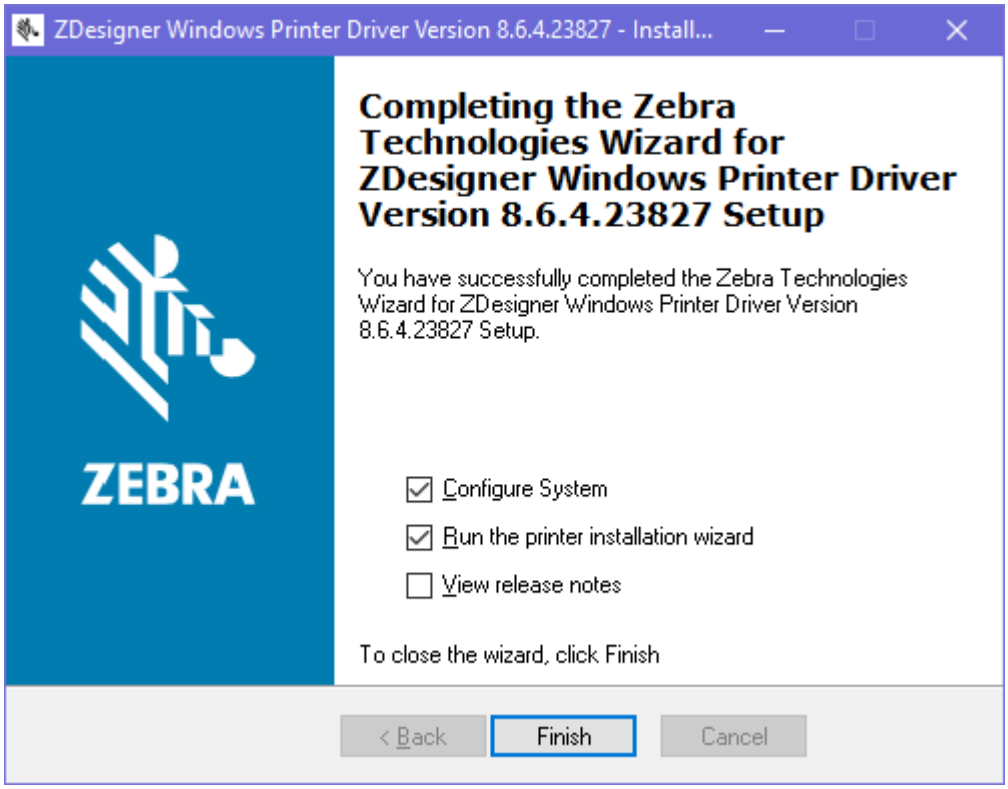

## Running the Printer Installation Wizard

1. On the last screen of the driver installer, leave **Run the Printer Installation Wizard** checked, then click **Finish**.

   The Printer Installation wizard displays.

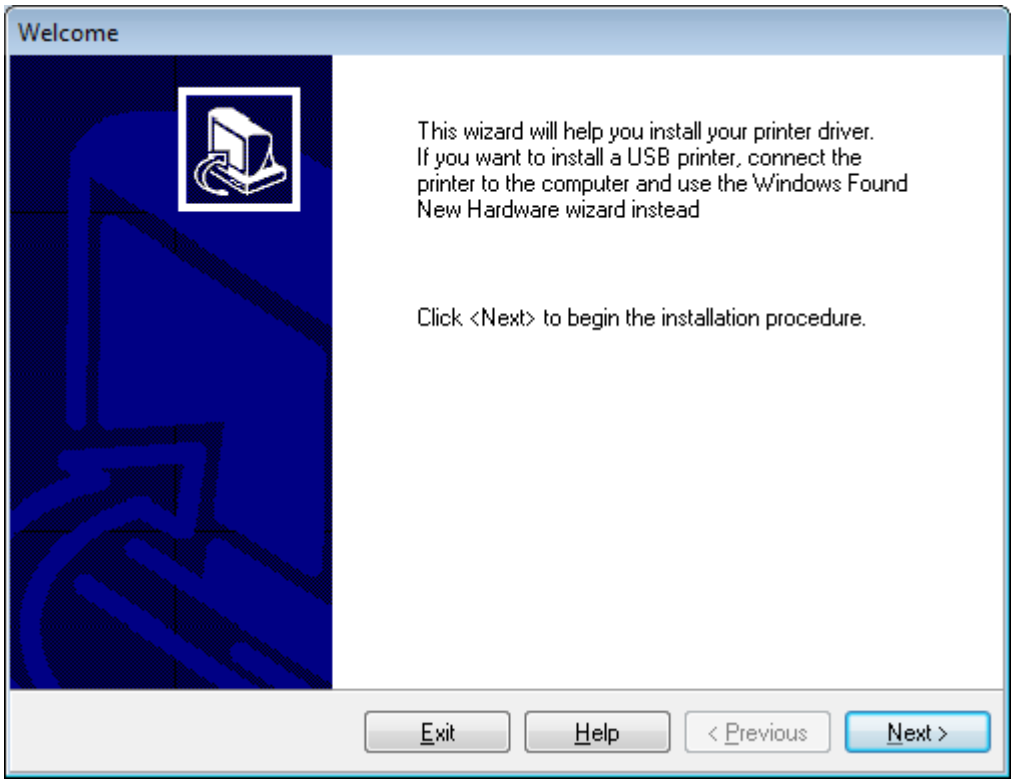


2. Click **Next**.

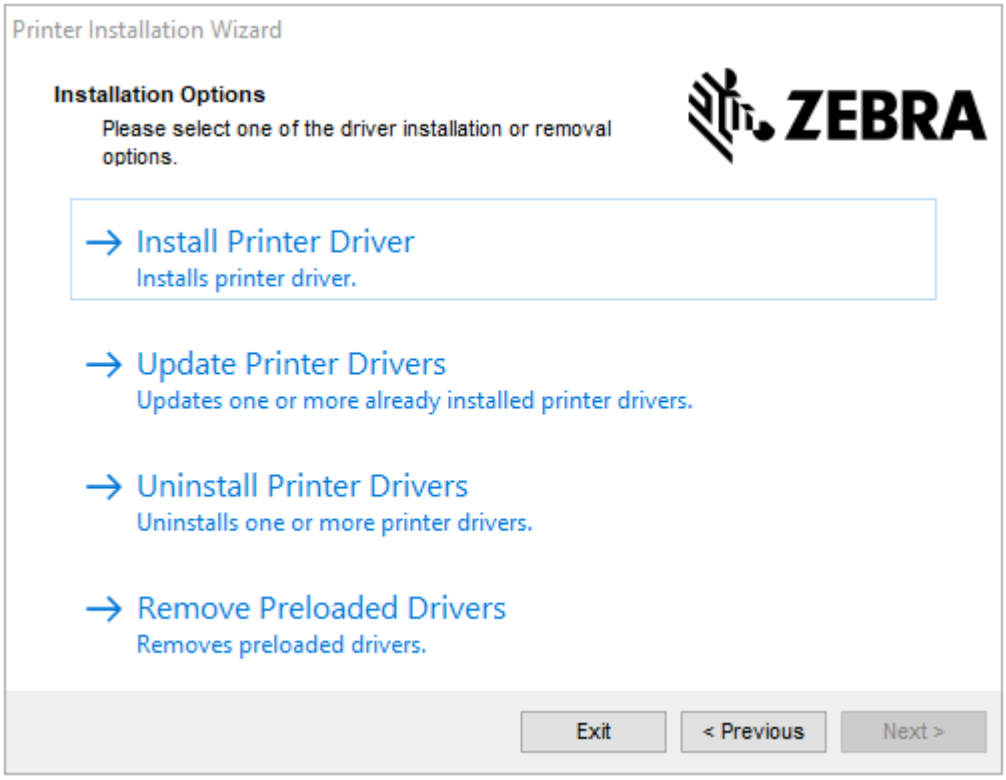


3. Click **Install Printer Driver**.

   The license agreement displays.

4. Read and accept the terms of the license agreement, and then click **Next**.

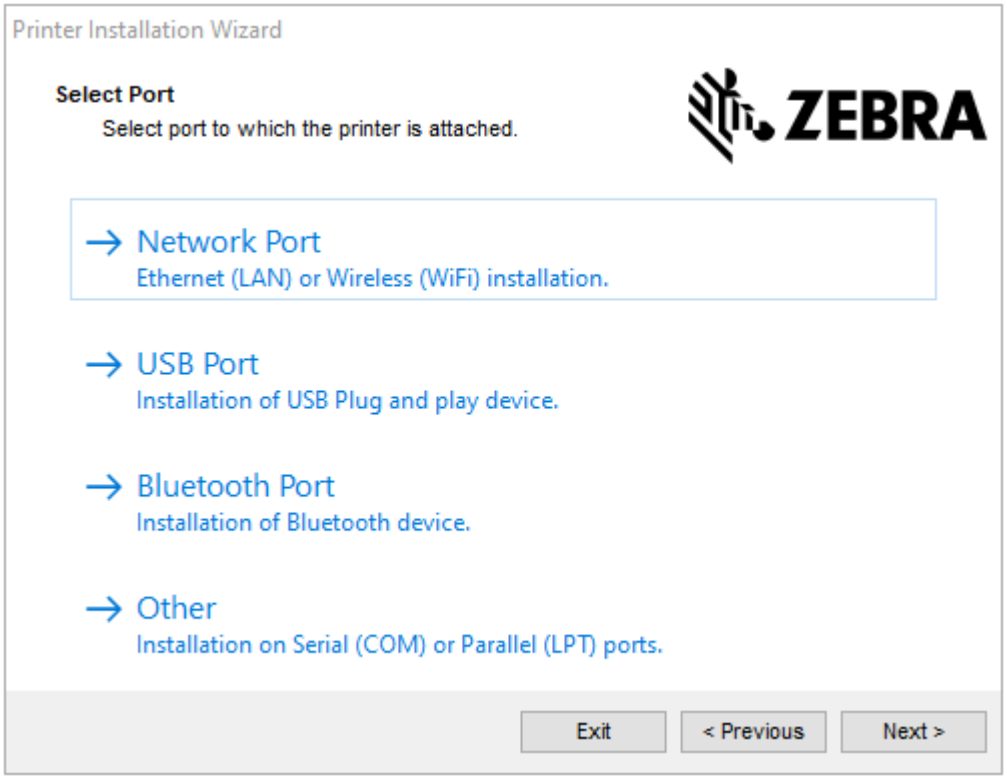


5. Select the communication option that you want to configure for your printer:
   - Network Port—or installing printers with an Ethernet (LAN) or wireless (Wi-Fi) network connection. Wait for the driver to scan your local network for devices and follow the prompts. If necessary, set the values as directed in Connecting to Your Network through the Printer's Ethernet Port on page 24 or in Connecting the Printer to Your Wireless Network on page 26.
   - USB Port—For installing printers connected with the USB cable. Connect the printer to the computer as shown in Connecting to a Computer Using the Printer's USB Port on page 21. If the printer is already connected and powered on, you may need to remove the USB cable and install it again. The driver will automatically search for the model of the connected printer.
   - Bluetooth Port—For installing printers with a Bluetooth connection.
   - Other—For installation using another type of cable, such as Serial (COM). No additional configuration is necessary.
6. If prompted, select your printer model and resolution.

   The model and resolution are on a part number sticker on the printer, usually located below the media hanger. The information will be in the following format:

```
Part Number: XXXXXxY – xxxxxxxx
```

   where

   XXXXX = the printer model, and Y = the printer resolution (2 = 203 dpi, 3 = 300 dpi, 6 = 600 dpi).

For example, in the part number ZT411x3 – xxxxxxxx, ZT411 indicates that the printer is a ZT411 model, and 3 indicates that the printhead resolution is 300 dpi.

## Connecting to a Computer Using the Printer's USB Port

1. After you install the drivers, remove the label that covers the USB port.

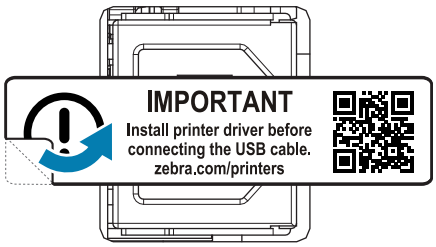


2. Connect the USB cord to the USB port on your printer.

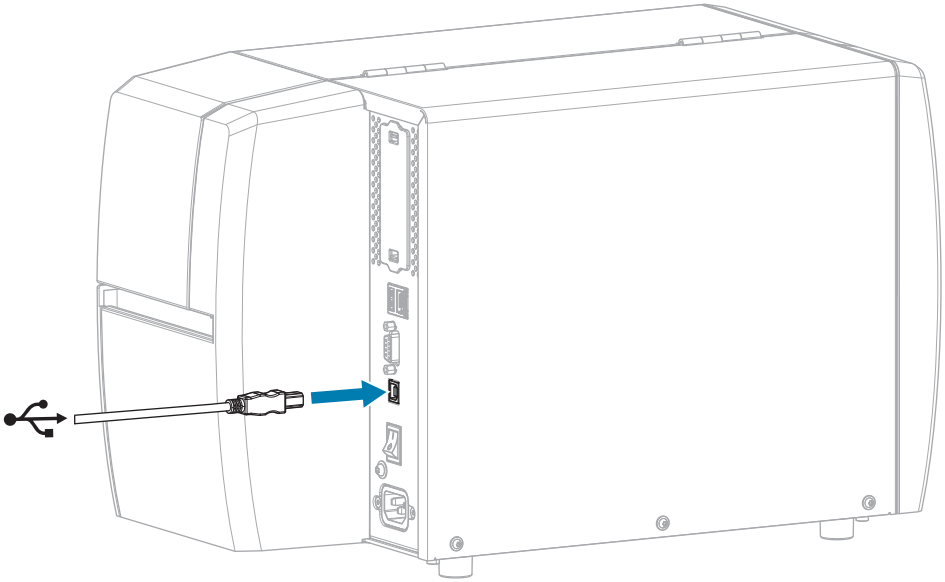

3. Connect the other end of the USB cord to your computer.
4. Plug the A/C power cord into the A/C power connector on the back of the printer.

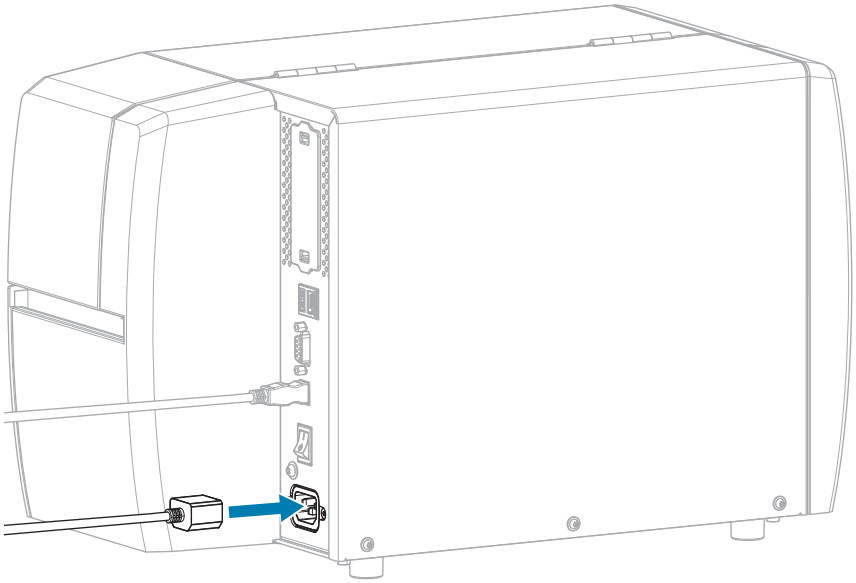

5. Plug the A/C power cord into an appropriate power outlet.

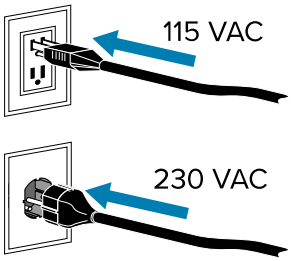


6. Turn on (**I**) the printer.

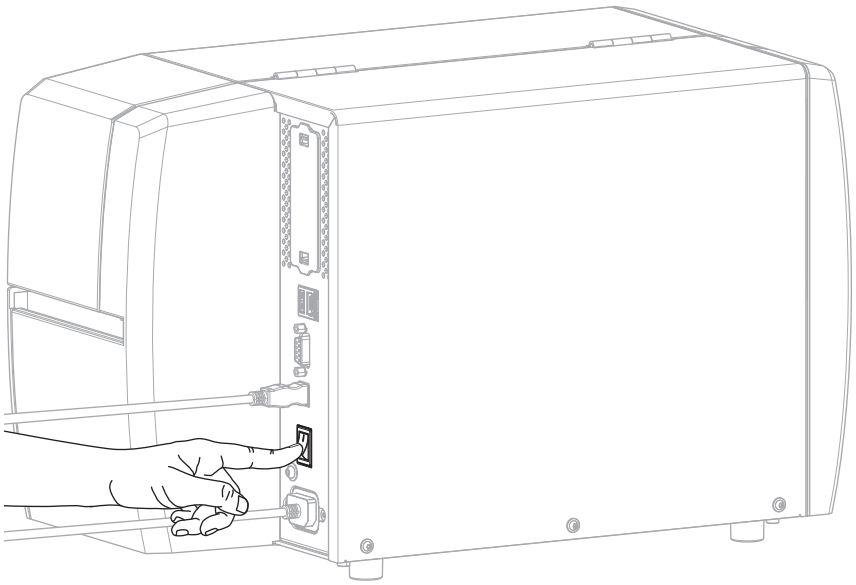

As the printer boots up, your computer completes the driver installation and recognizes your printer.

**CAUTION—PRODUCT DAMAGE:** If you need to power cycle the printer, allow it to fully boot up first. Then after turning it off, wait 30 seconds before turning it back on. Power cycling the printer too quickly can cause issues.

If you did not install the drivers first, see What to Do If You Forget to Install Printer Drivers First on page 28.

## Connecting to Your Network through the Printer's Ethernet Port

To use a wired print server (Ethernet) connection, you may need to configure the printer to communicate with your Local Area Network (LAN).

**NOTE:** For printers purchased in the EMEA region after August 1, 2025, you must configure a Protected Mode password and front panel password for the printer before you can perform wired or wireless setup. For additional information, go to zebra.com/asr or refer to the Zebra Link-OS PrintSecure Printer Administration Guide.

For other printers with Protected Mode enabled, depending on the configuration, you may need to enter the Protected Mode password to change certain settings on the printer. For more information, refer to the Zebra Link-OS PrintSecure Printer Administration Guide.

For additional information about Zebra print servers, refer to the ZebraNet Wired and Wireless Print Server User Guide. To download the latest version of this guide, go to zebra.com/manuals.

1. After you install the drivers (see Installing the Drivers on page 16), connect the printer to an Ethernet cable that is connected to your network.

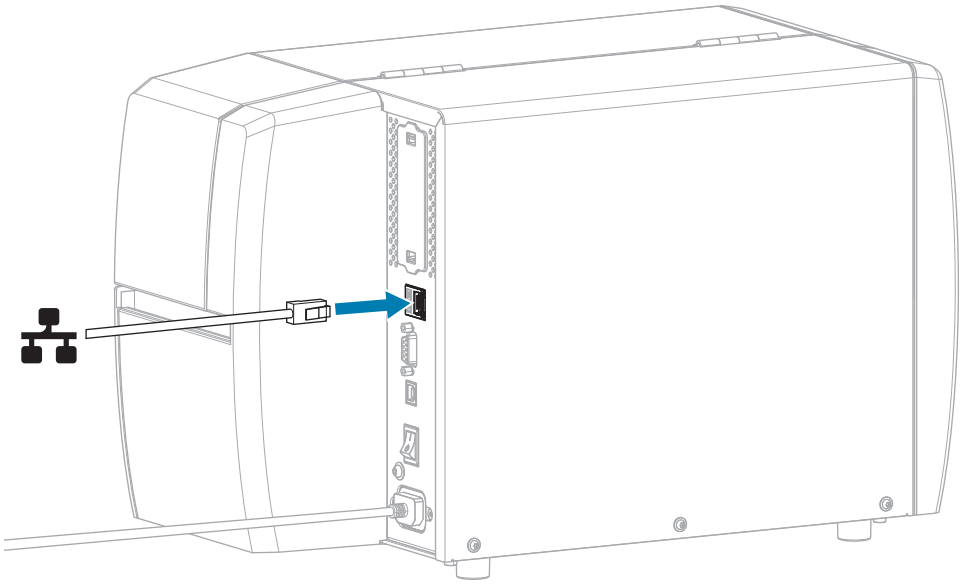

2. Plug the A/C power cord into the A/C power connector on the back of the printer.

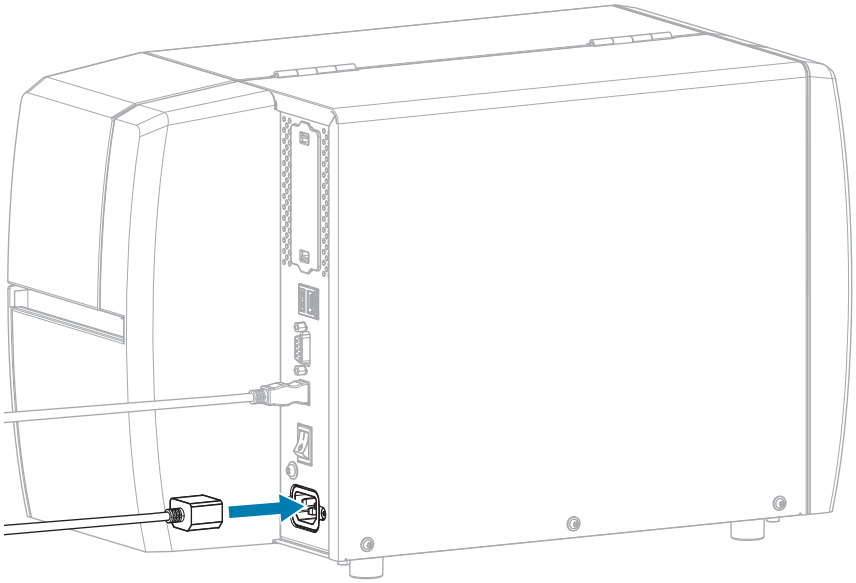

3. Plug the A/C power cord into an appropriate power outlet.

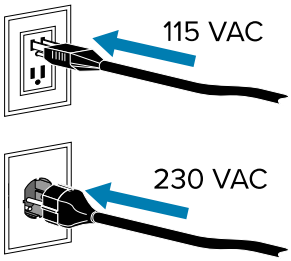


4. Turn on (**I**) the printer.

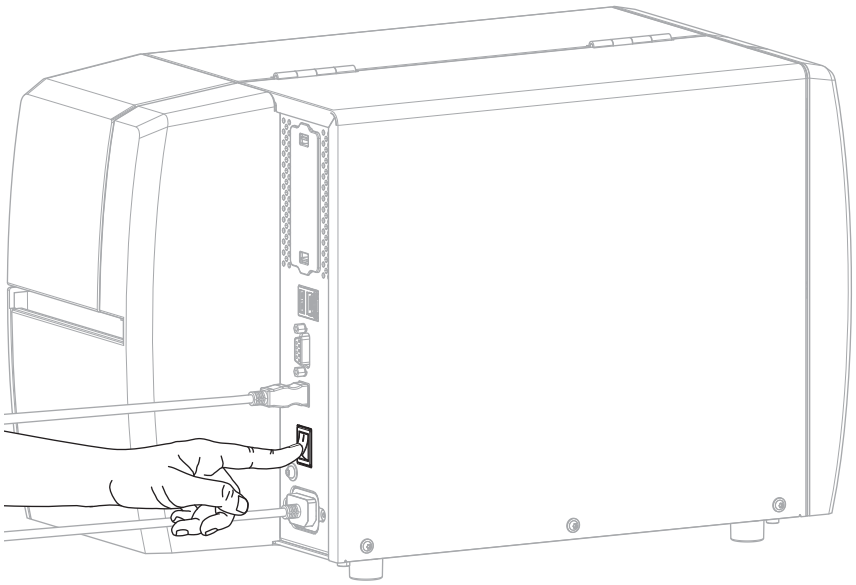

The printer attempts to communicate with your network. If it is successful, it fills in your LAN's gateway and subnet values and gets an IP address.

**CAUTION—PRODUCT DAMAGE:** If you need to power cycle the printer, allow it to fully boot up first. Then after turning it off, wait 30 seconds before turning it back on. Power cycling the printer too quickly can cause issues.

If you did not install the drivers first, see What to Do If You Forget to Install Printer Drivers First on page 28.

5. Check to see if an IP address was assigned to the printer. See IP Address (wired or WLAN) for ways to view the IP address.

| If the printer's IP address is... | Then... |
|---|---|
| `0.0.0.0`<br>or<br>`000.000.000.000` | The NETWORK light is off or displays steady red. (See Indicator Lights on page 109 for more information.)<br>**a.** Check the Ethernet connector on the back of the printer. If no light is on or blinking, the Ethernet connection is not active. Check that both ends of the cord are plugged in correctly and that the network port that you are plugging into is active. When this issue is resolved, the printer should connect automatically.<br>**b.** If necessary, configure the following printer settings to set a static IP address and then reset the network. Contact your network administrator for the proper values for your network.<br>• IP Protocol (wired or WLAN)—Change the value from ALL to PERMANENT.<br>• Gateway (wired or WLAN)—Match the gateway value of your LAN.<br>• Subnet (wired or WLAN)—Match the subnet value of your LAN.<br>• IP Address (wired or WLAN)—Assign a unique IP address to the printer. |
| any other value | The connection was successful. The NETWORK light displays steady green or yellow, depending on the network. (See Indicator Lights on page 109 for more information.) |

6. Reset the network (see Reset Network) to allow changes to the network settings to take effect.

## Connecting the Printer to Your Wireless Network

If you wish to use the printer's optional wireless print server, you must first connect the printer to your computer using one of the other available connections. While the printer is connected via one of those connections, you configure the printer to communicate with your Wireless Local Area Network (WLAN) through the wireless print server.

For additional information about Zebra print servers, refer to the ZebraNet Wired and Wireless Print Server User Guide. To download the latest version of this guide, go to zebra.com/manuals.

**NOTE:** For printers purchased in the EMEA region after August 1, 2025, you must configure a Protected Mode password and front panel password for the printer before you can perform

wired or wireless setup. For additional information, go to zebra.com/asr or refer to the Zebra Link-OS PrintSecure Printer Administration Guide.

For other printers with Protected Mode enabled, depending on the configuration, you may need to enter the Protected Mode password to change certain settings on the printer. For more information, refer to the Zebra Link-OS PrintSecure Printer Administration Guide.

1. Install the drivers as instructed in Installing Drivers and Connecting to a Windows-Based Computer on page 16.
2. Plug the A/C power cord into the A/C power connector on the back of the printer.

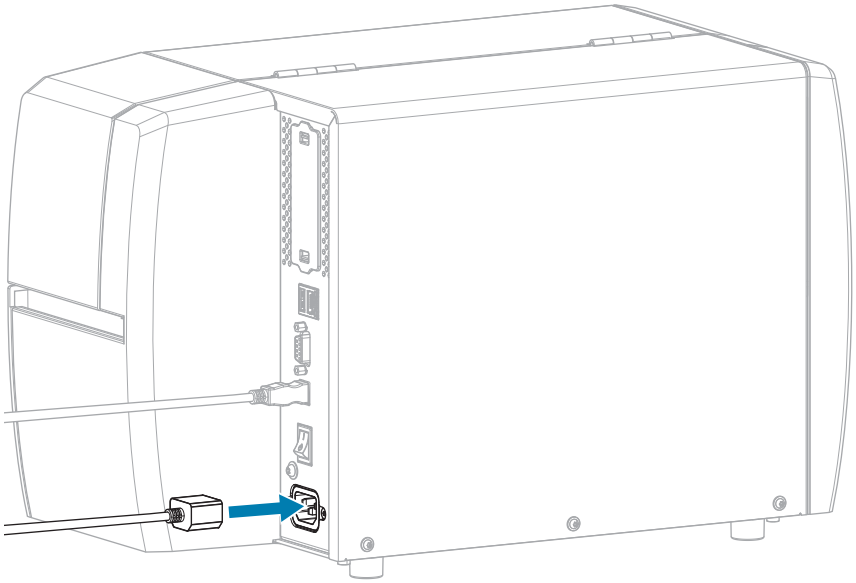

3. Plug the A/C power cord into an appropriate power outlet.

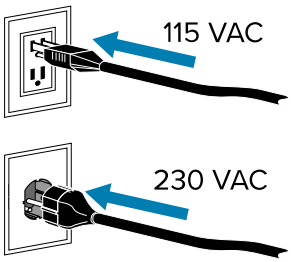


4. Turn on (**I**) the printer.

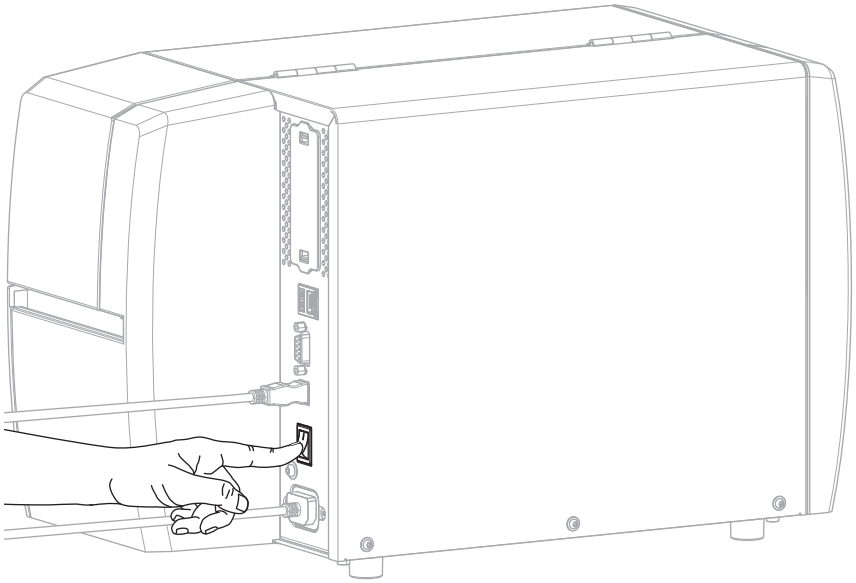

As the printer boots up, your computer completes the driver installation and recognizes your printer.

**CAUTION—PRODUCT DAMAGE:** If you need to power cycle the printer, allow it to fully boot up first. Then after turning it off, wait 30 seconds before turning it back on. Power cycling the printer too quickly can cause issues.

If you did not install the drivers first, see What to Do If You Forget to Install Printer Drivers First on page 28.

5. If necessary, specify the ESSID value that matches the value used by your wireless router. Check with your network administrator for the ESSID value to use. See ESSID for ways to change the value.
6. If necessary, configure the following printer settings. Contact your network administrator for the proper values for your network.
   - Gateway—Match the gateway value of your LAN.
   - Subnet—Match the subnet value of your LAN.
7. Reset the network (see Reset Network) to allow changes to the network settings to take effect.
8. If the printer still does not connect, consider setting a static IP address by configuring the following additional settings, and then reset the network again. Contact your network administrator for the proper values for your network.
   - IP Protocol—Change the value from ALL to PERMANENT.
   - IP Address—Assign a unique IP address to the printer.

## What to Do If You Forget to Install Printer Drivers First

If you plug in your Zebra printer before installing the drivers, the printer displays as an Unspecified device.

1. Follow the instructions in Installing Drivers and Connecting to a Windows-Based Computer on page 16 to download and install the drivers.
2. From the Windows menu, open the Control Panel.
3. Click **Devices and Printers**.

In this example, the MZ320 is an incorrectly-installed Zebra printer.

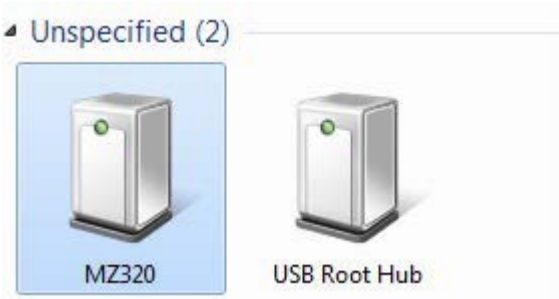


4. Right-click on the device, and select **Properties**.

   The properties for the device display.

5. Click the **Hardware** tab.

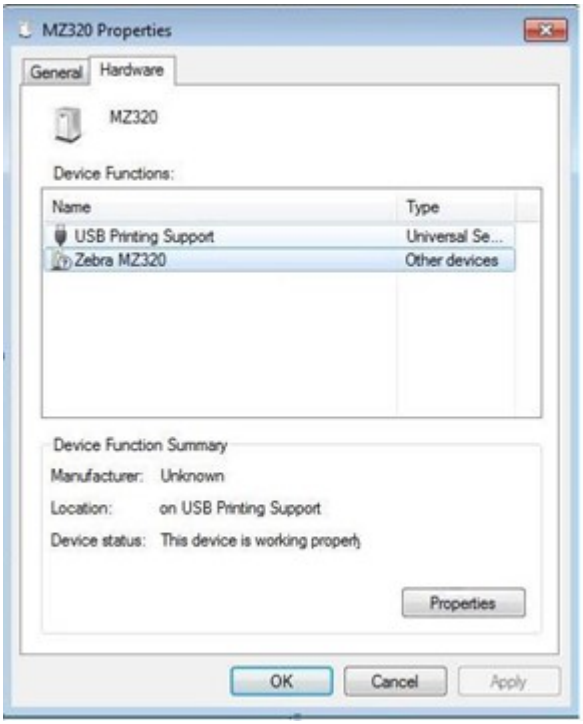


6. Select the Zebra printer in the **Device Functions** list, then click **Properties**.

   The properties display.

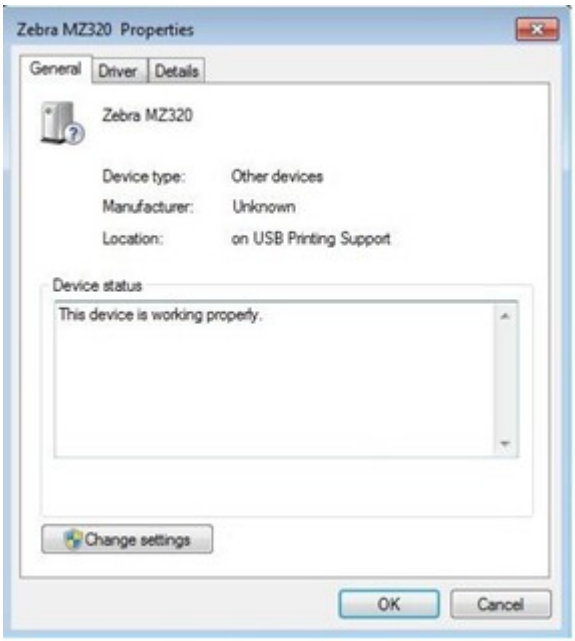


7. Click **Change settings**, then click the **Driver** tab.

8. Click **Update Driver**.

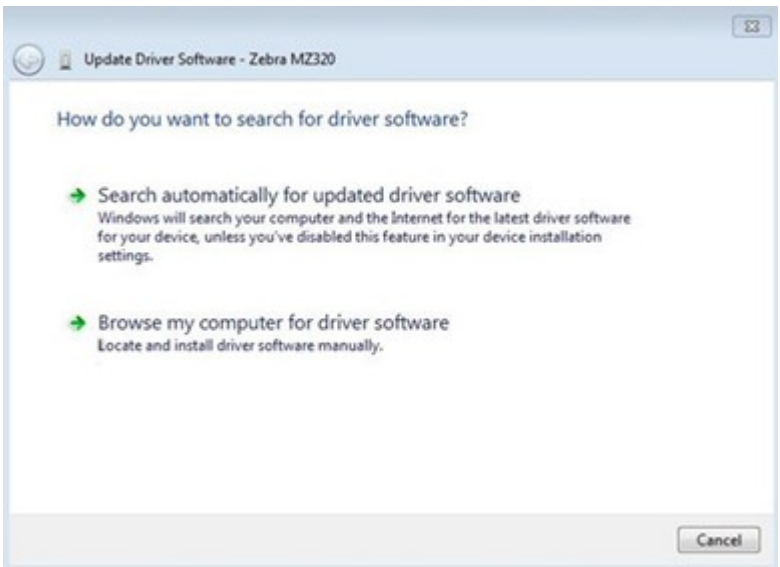


9. Click **Browse my computer for driver software**.
10. Click **Browse...** and navigate to the Downloads folder.
11. Click **OK** to select the folder.

12. Click **Next**.

The device is updated with the correct drivers.

## Determining the Media Handling Method

Before loading media, decide on a media handling method that matches the media being used and the printer options available.

**Figure 3** Printer Options

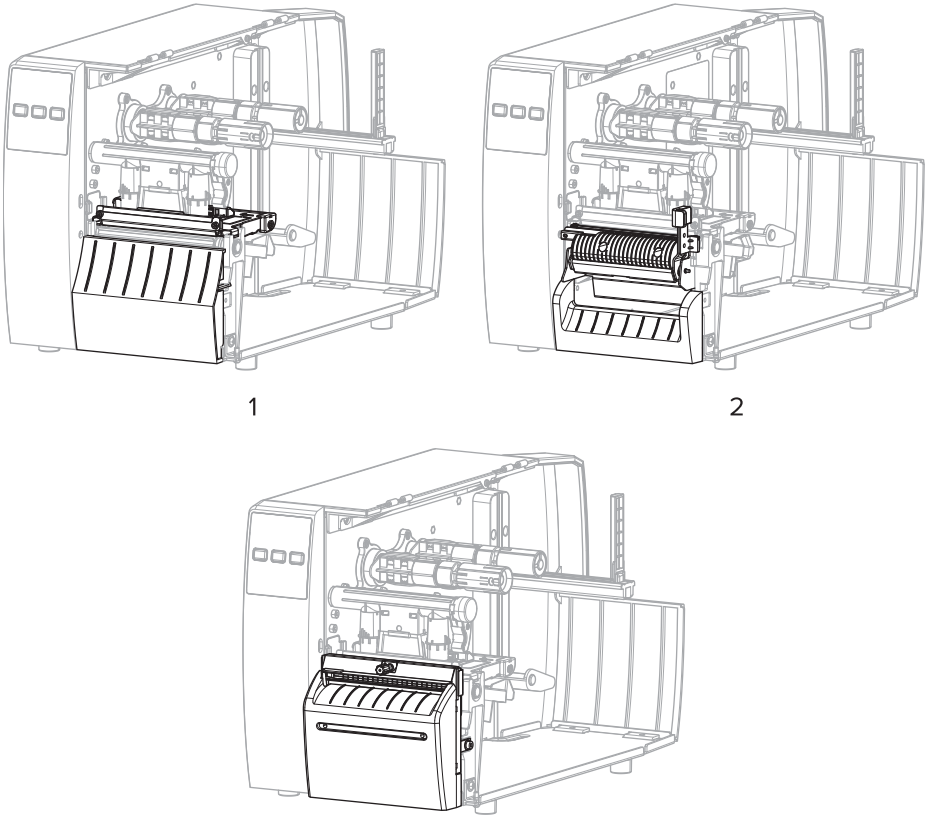


| | |
|---|---|
| 1 | Tear-Off (standard) |
| 2 | Peel option |
| 3 | Cutter option |

**Table 3** Media Handling Methods and Printer Options

| Method | Required Printer Option | Description |
|---|---|---|
| Tear Off | Can be used with any printer option and most media types. | The printer prints label formats as it receives them. The printer operator can tear off the printed labels when the printer stops. |
| Peel Off | Peel option | The printer peels the label from the backing during printing and then pauses until the label is removed. |
| Cutter* | Cutter option | The printer cuts between labels after each one is printed. |

**Table 3** Media Handling Methods and Printer Options (Continued)

| Method | Required Printer Option | Description |
|---|---|---|
| Delayed Cut* | Cutter option | The printer waits for a delayed cut ZPL command (~JK) before it cuts the last printed label. |
| **NOTE:** Applicator, Linerless Peel, Linerless Rewind, Linerless Tear, Linerless Cut, and Linerless Delayed Cut are options reserved for future use. | | |

Select a method that matches the media being used and the printer options available.

**See Also**

Print Settings

# Loading the Media

Use the instructions in this section for loading roll or fanfold media in the appropriate label collection method for your needs.

**IMPORTANT:** You are not required to turn off the printer power when working near an open printhead, but Zebra recommends it as a precaution. If you turn off the power, you will lose all temporary settings, such as label formats, and you must reload them before you resume printing.

**NOTE:** The media path is the same for roll and fanfold media.

## Inserting the Media into the Printer

The media loading path is the same for both roll and fanfold media. Roll media is shown in most images in this section.

1. Open the media cover.

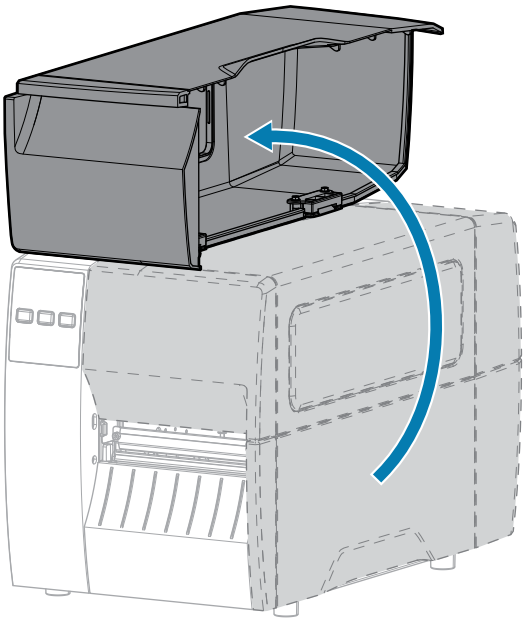

2. Remove and discard any tags or labels that are torn or dirty or that are held by adhesives or tape.

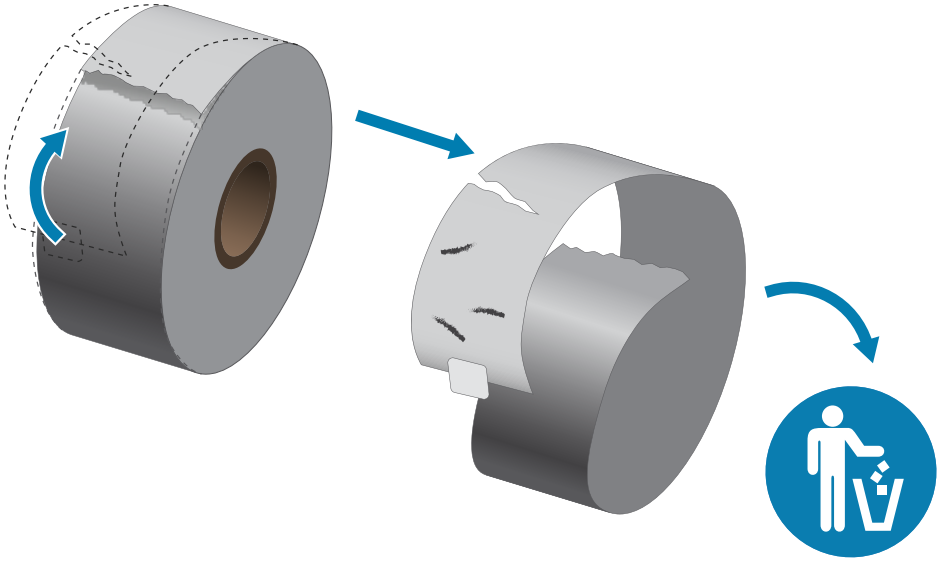

3. Slide out and flip down the media supply guide.

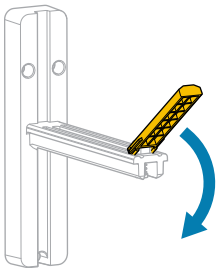

4. Insert roll or fanfold media into the printer.

| Type of media | Instructions |
|---|---|
| Roll media | Place the roll of media on the media supply hanger. Push the roll as far back as it will go. 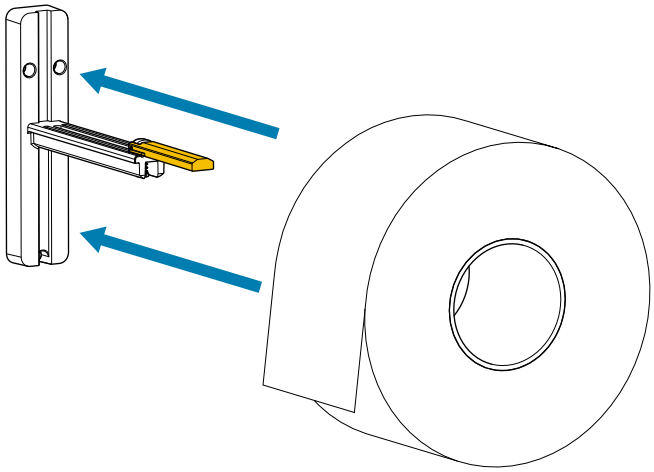 |
| Fanfold media | **a.** Insert the fanfold media through the rear of the printer. 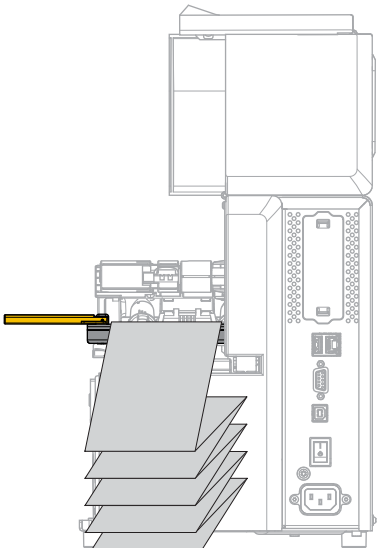 **b.** Drape the media over the media supply hanger. 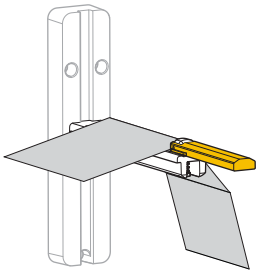 |

**5.** Flip up the media supply guide.

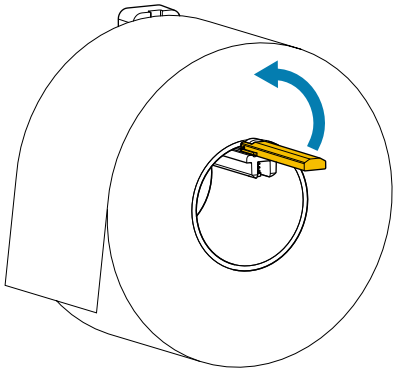

6. Slide in the media supply guide until it touches the edge of the roll.

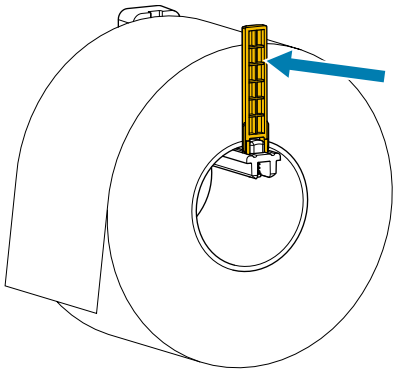

7. Which collection method are you using? (See Determining the Media Handling Method on page 33.)

| If using... | Then... |
|---|---|
| **Tear Off** 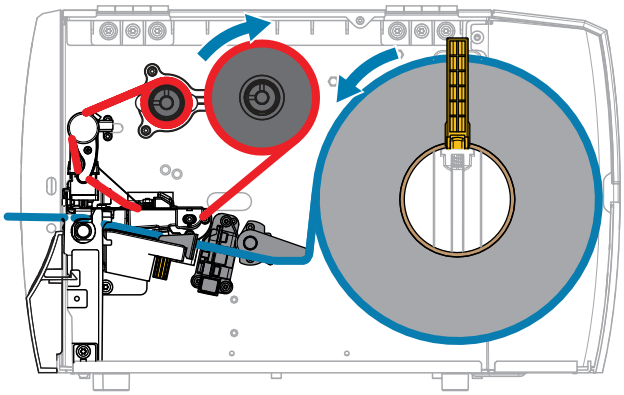 | Continue with Using Tear-Off Mode on page 39. |

| If using... | Then... |
|---|---|
| 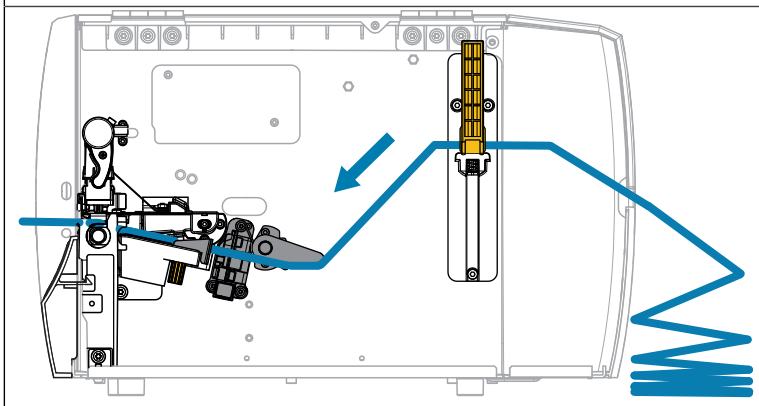 | |
| **Peel Off** 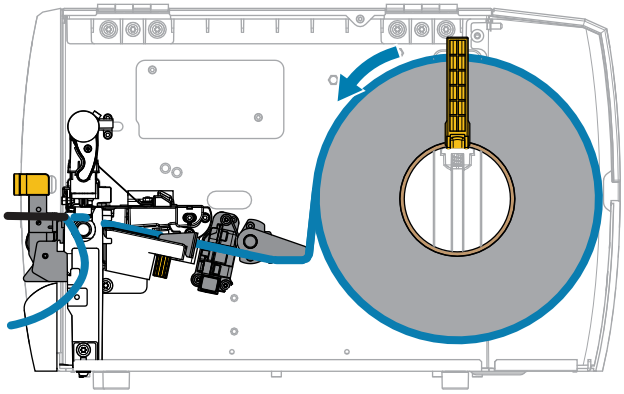 | Continue with Using Peel Mode on page 42. |
| **Cutter or Delayed Cut** 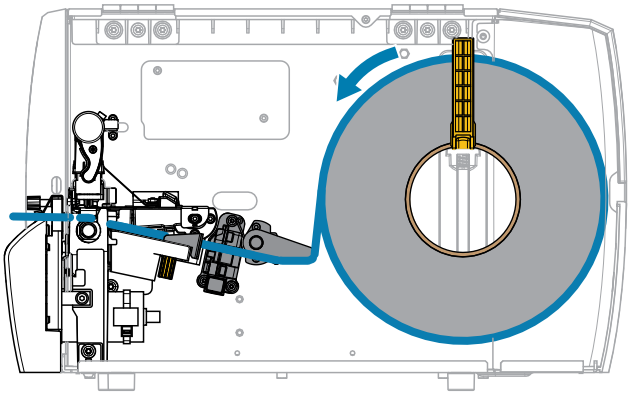 | Continue with Using Cutter Mode or Delayed Cut Mode on page 46. |

## Using Tear-Off Mode

The media loading path is the same for both roll and fanfold media. Roll media is shown in the images in this section.

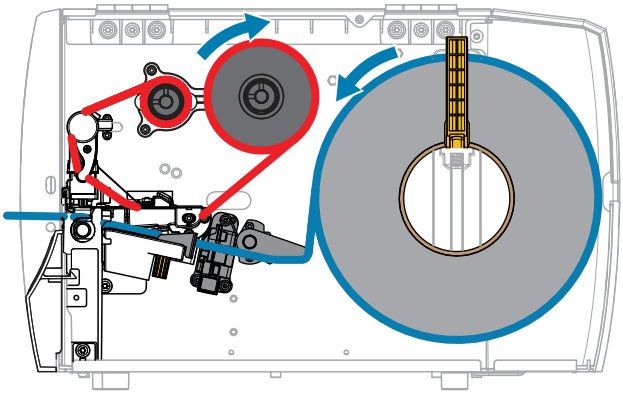

1. Insert media into the printer. See Inserting the Media into the Printer on page 34.
2. Release the printhead assembly.

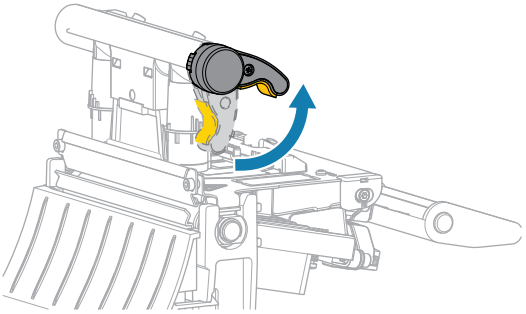

As the printhead lever rotates upward, the printhead assembly pivots upward.

3. Slide the outer media guide all the way out.

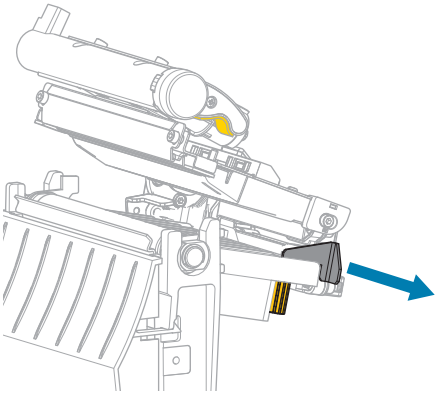

4. Load the media as shown. Make sure that the media passes through the slot in the transmissive media sensor (1) and under the inner media guide (2). The media should just touch the back of the transmissive media sensor slot.

**CAUTION—HOT SURFACE:** The printhead may be hot and could cause severe burns. Allow the printhead to cool.

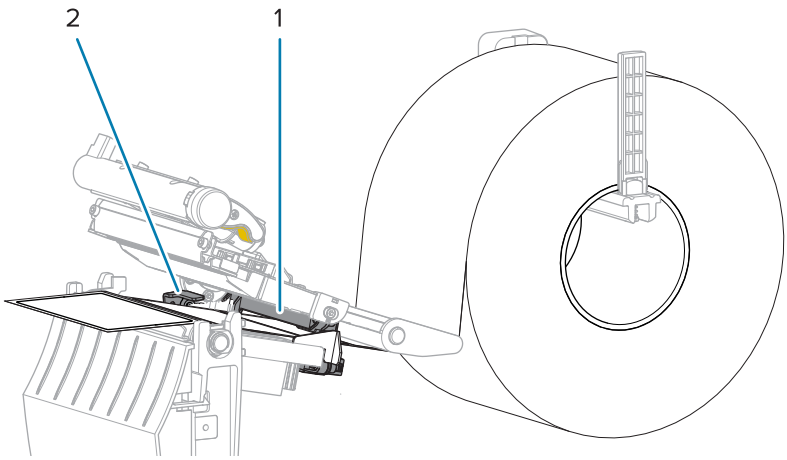


5. Slide in the outer media guide until it just touches the edge of the media.

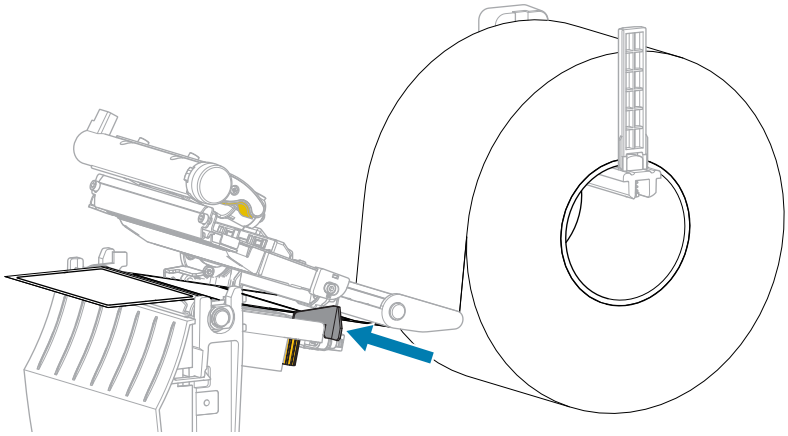

6. Close the printhead assembly.

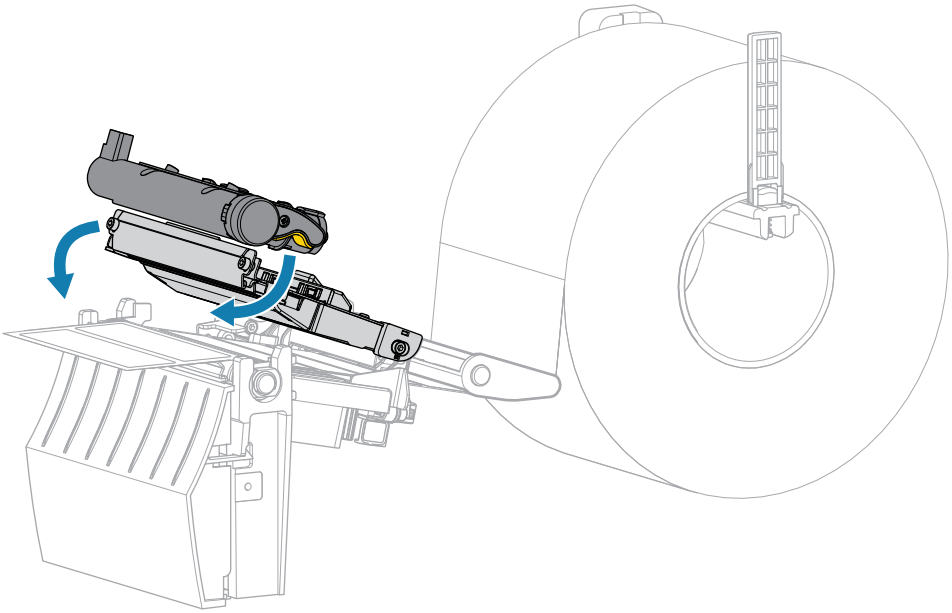

7. Close the media cover.

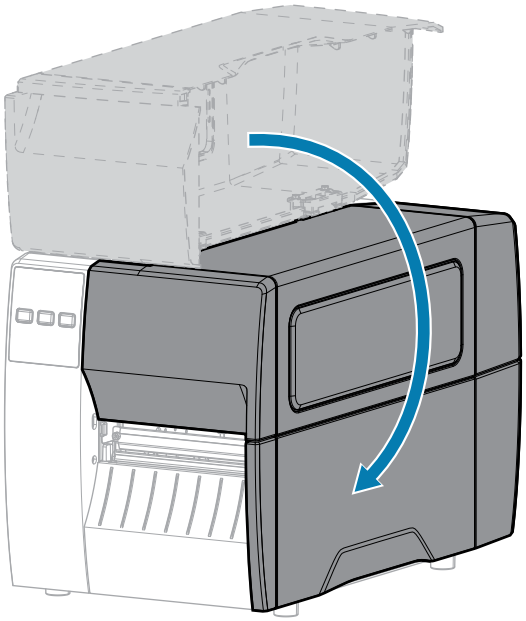

8. Press **PAUSE** to exit pause mode and enable printing.

   The printer may perform a label calibration or feed a label, depending on your settings.

9. Verify that your printer is able to print a configuration label by holding both the **FEED** and **CANCEL** keys for 2 seconds.

## Using Peel Mode

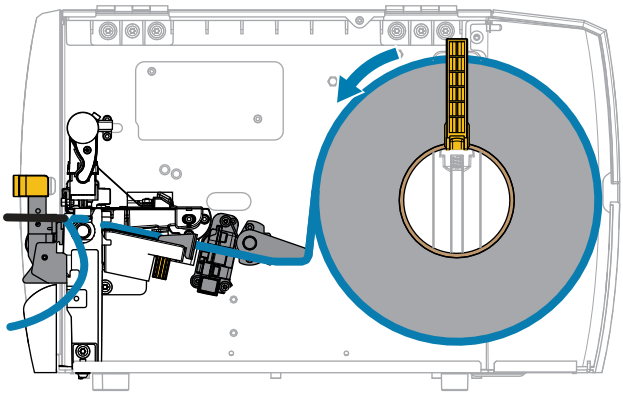

1. Insert media into the printer. See Inserting the Media into the Printer on page 34.
2. Release the printhead assembly.

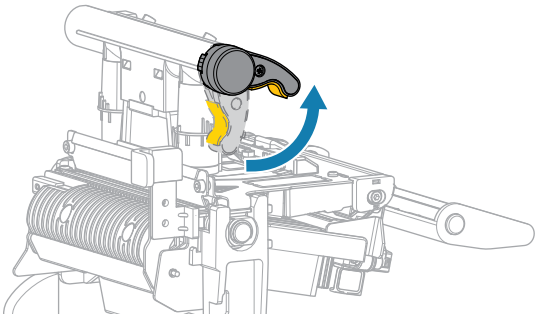

As the printhead lever rotates upward, the printhead assembly pivots upward.

3. Slide the outer media guide all the way out.

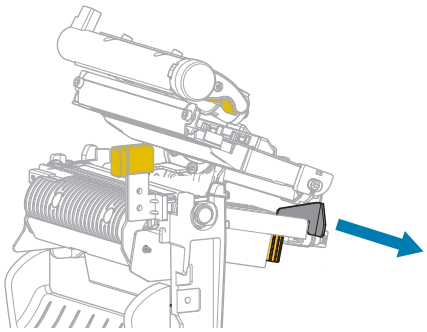

4. Load the media as shown. Make sure that the media passes through the slot in the transmissive media sensor (1) and under the inner media guide (2). The media should just touch the back of the transmissive media sensor slot.

**CAUTION—HOT SURFACE:** The printhead may be hot and could cause severe burns. Allow the printhead to cool.

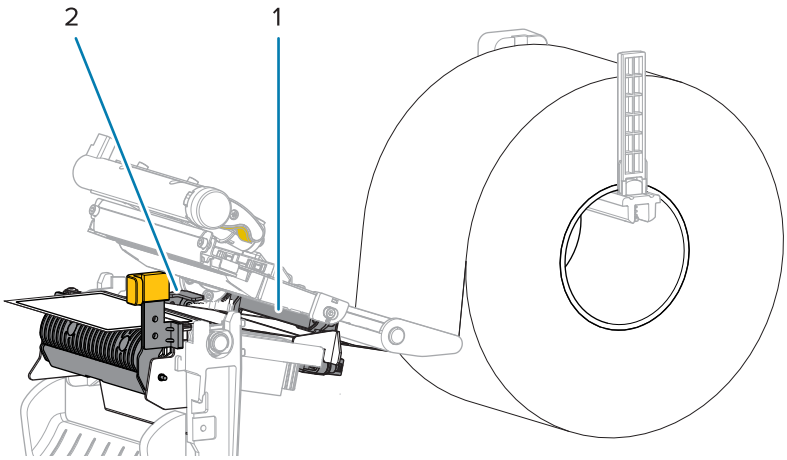


5. Push down the peel-off mechanism release lever to open the peel assembly.

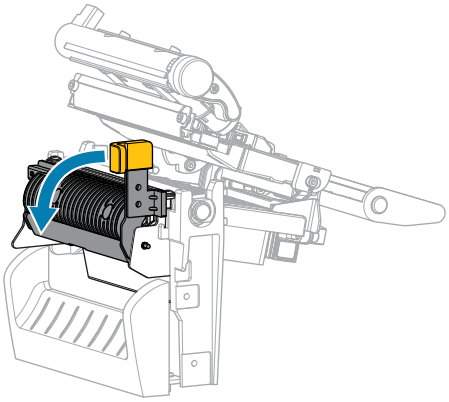

6. Extend approximately 500 mm (18 in.) of media out of the printer. Remove and discard the labels from this exposed media, leaving just the liner.

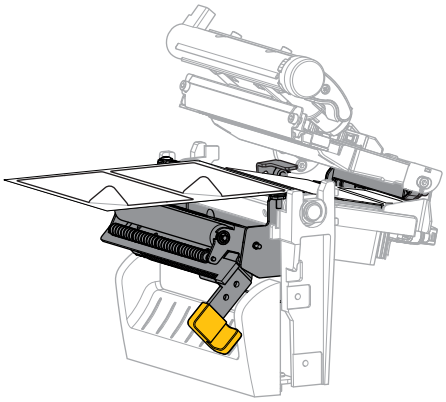

7. Feed the liner behind the peel assembly. Make sure that the end of the liner falls outside of the printer.

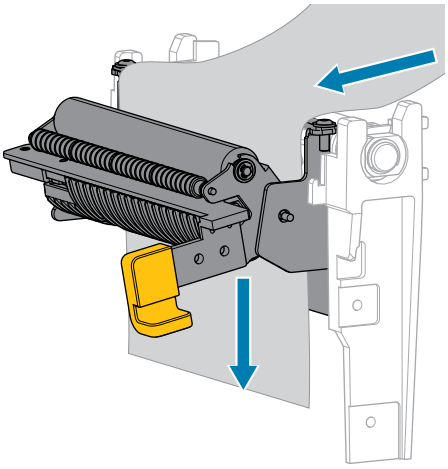

8. Close the peel assembly using the peel-off mechanism release lever.

**CAUTION:** Use the peel-off mechanism release lever and your right hand to close the peel assembly. Do not use your left hand to assist in closing. The top edge of the peel roller/ assembly could pinch your fingers.

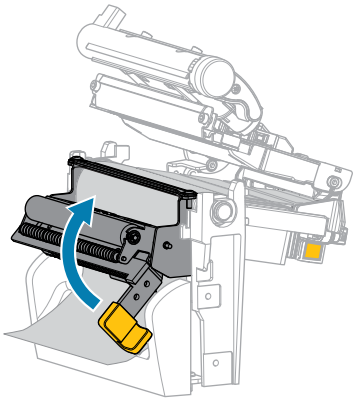

9. Slide in the outer media guide until it just touches the edge of the media.

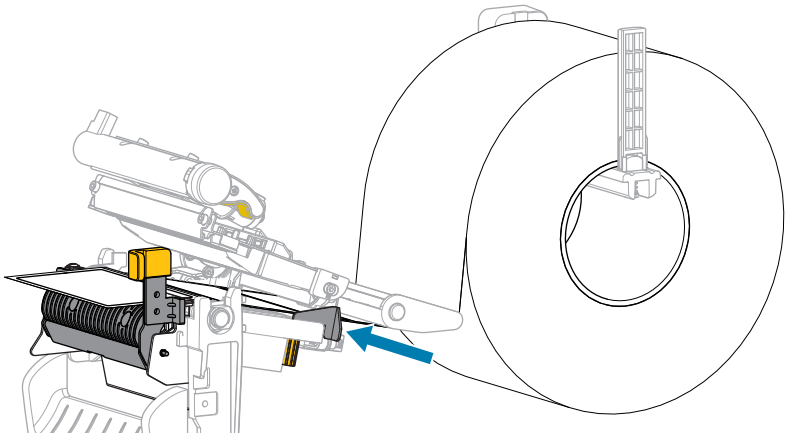

10. Close the printhead assembly.

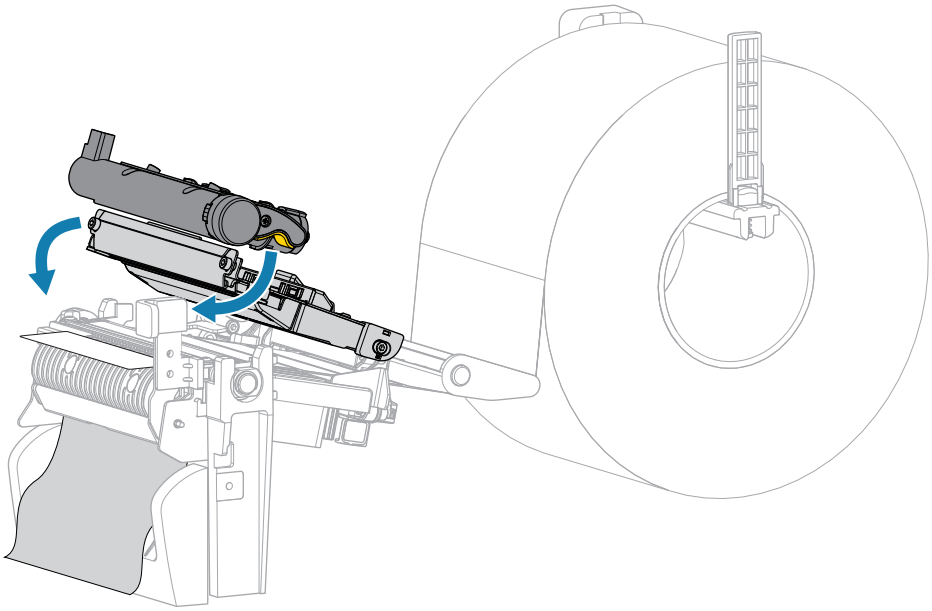

11. Close the media cover.

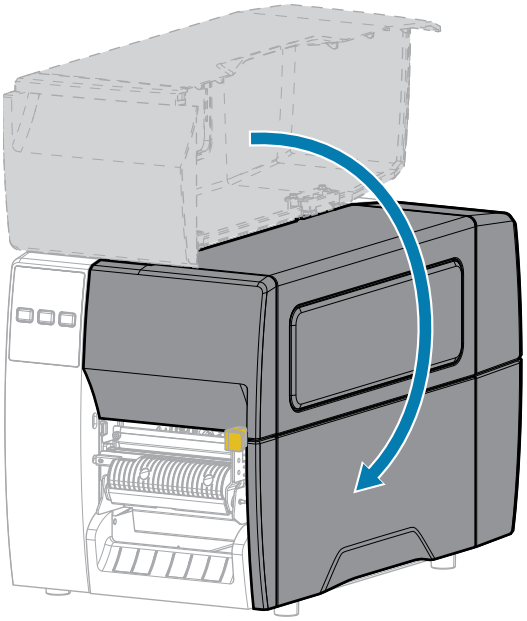

12. Press **PAUSE** to exit pause mode and enable printing.

    The printer may perform a label calibration or feed a label, depending on your settings.

13. Verify that your printer is able to print a configuration label by holding both the **FEED** and **CANCEL** keys for 2 seconds.

## Using Cutter Mode or Delayed Cut Mode

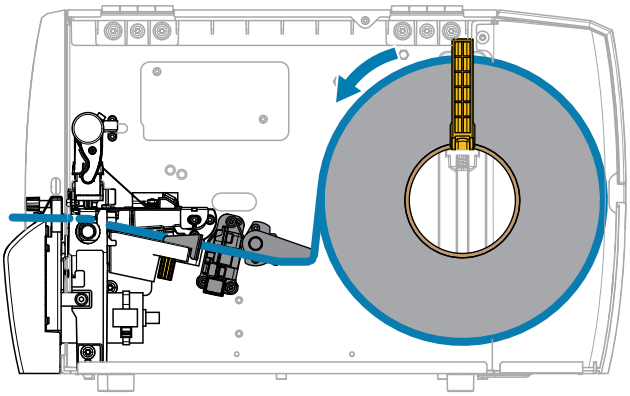

1. Release the printhead assembly.

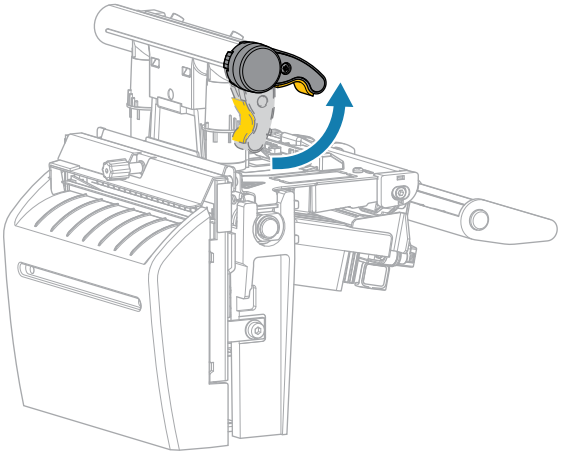

As the printhead lever rotates upward, the printhead assembly pivots upward.

2. Slide the outer media guide all the way out.

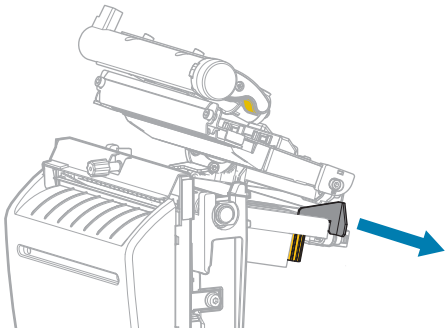

3. Load the media as shown.
   a) Make sure that the media passes through the slot in the transmissive media sensor (1) and under the inner media guide (2). The media should just touch the back of the transmissive media sensor slot.

**CAUTION—HOT SURFACE:** The printhead may be hot and could cause severe burns. Allow the printhead to cool.

**b)** Feed the media through the cutter.

**CAUTION:** The cutter blade is sharp. Do not touch or rub the blade with your fingers.

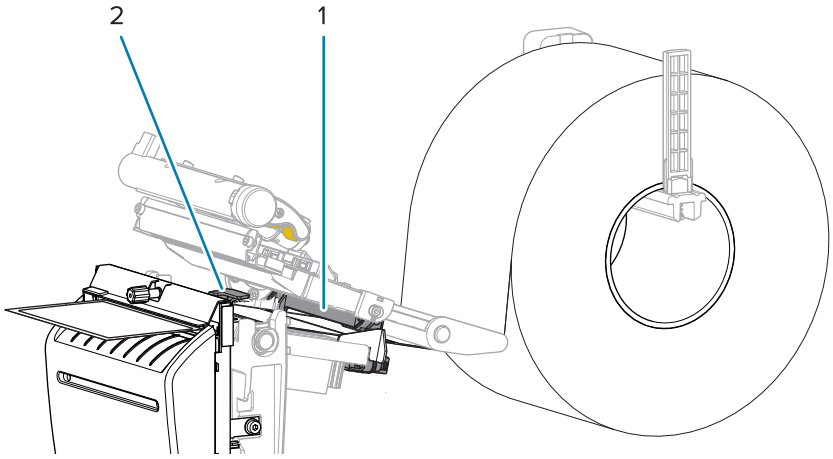


**4.** Slide in the outer media guide until it just touches the edge of the media.

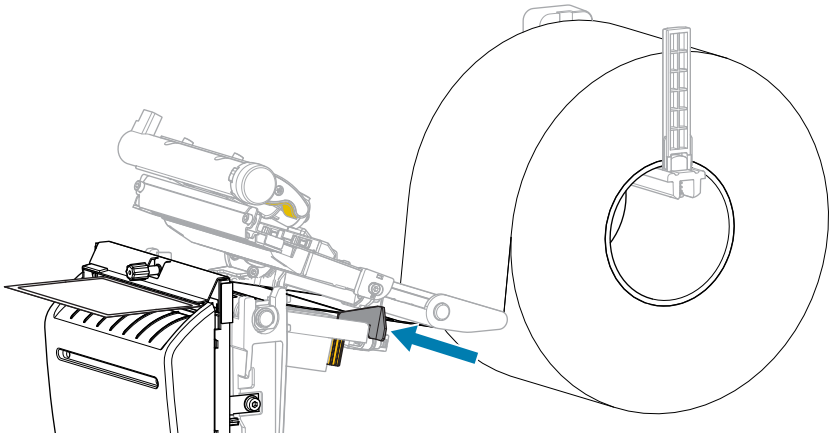

**5.** Close the printhead assembly.

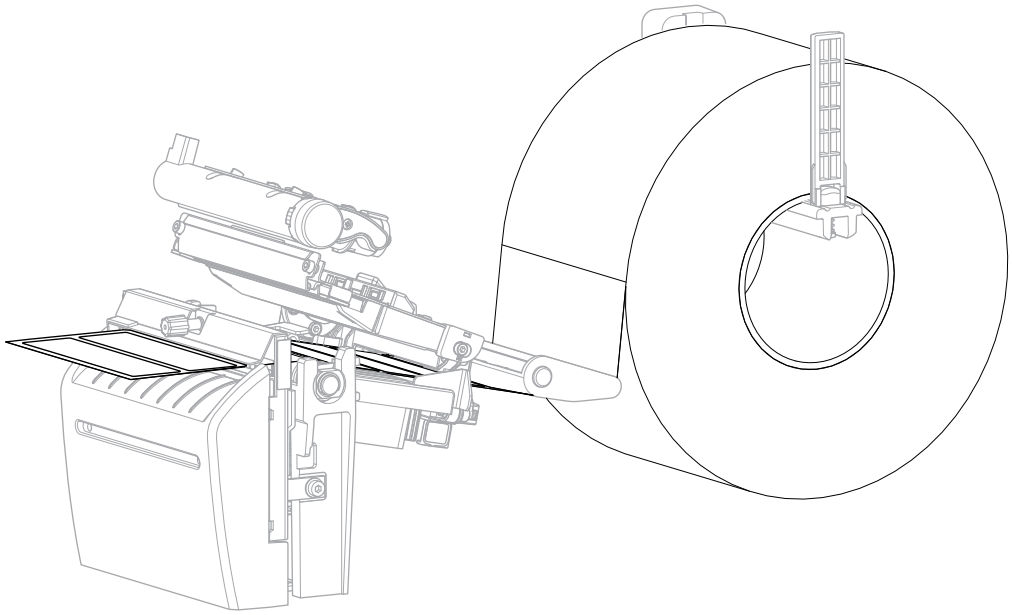

6. If desired, insert the cutter catch tray into the slot on the front of the cutter.

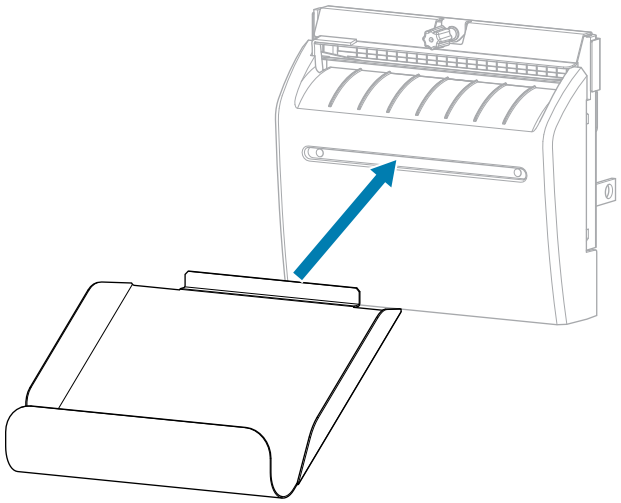

7. Close the media cover.

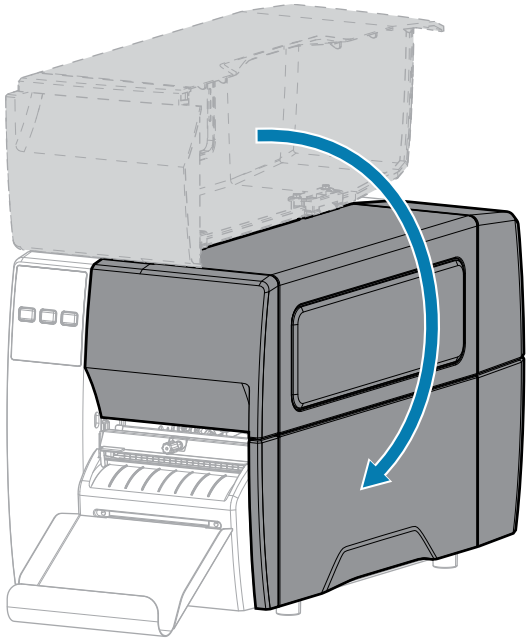

8. Set the printer to Cutter mode (see Print Menu > Label Position > Collection Method).
9. Press **PAUSE** to exit pause mode and enable printing.

   The printer may perform a label calibration or feed a label, depending on your settings.
10. For optimal results, calibrate the printer. See Calibrating the Ribbon and Media Sensors on page 77.
11. Verify that your printer is able to print a configuration label by holding both the **FEED** and **CANCEL** keys for 2 seconds.

    Media loading in Tear-Off mode is complete.

## Loading the Ribbon

**NOTE:** This section applies only to printers that have the Thermal Transfer option installed.

Ribbon is used only with thermal transfer labels. For direct thermal labels, do not load ribbon in the printer. To determine if ribbon must be used with a particular media, see Ribbon on page 11.

**IMPORTANT:** Use ribbon that is wider than the media to protect the printhead from wear. Ribbon must be coated on the outside.

1. Open the media cover.

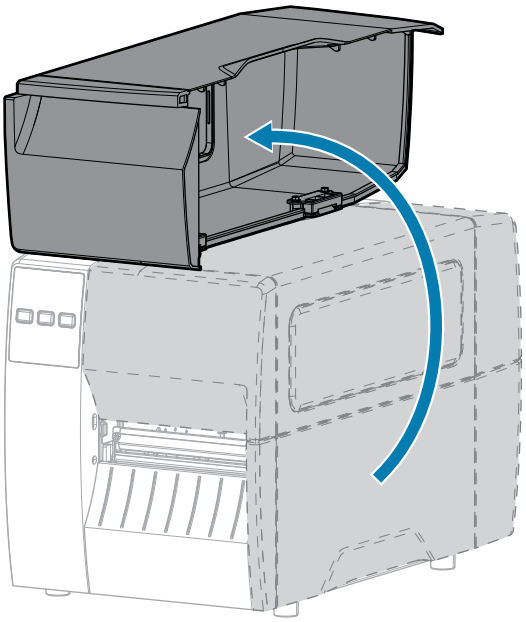

2. Release the printhead assembly.

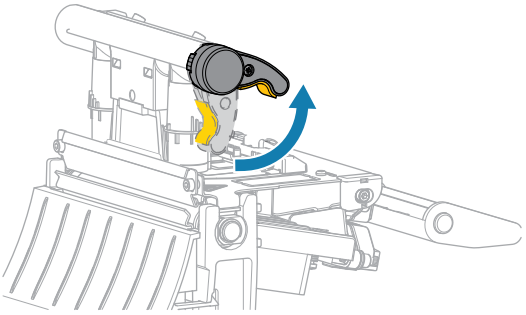

As the printhead lever rotates upward, the printhead assembly pivots upward.

3. Place the roll of ribbon on the ribbon supply spindle with the loose end of the ribbon unrolling as shown. Push the roll back as far as it will go.

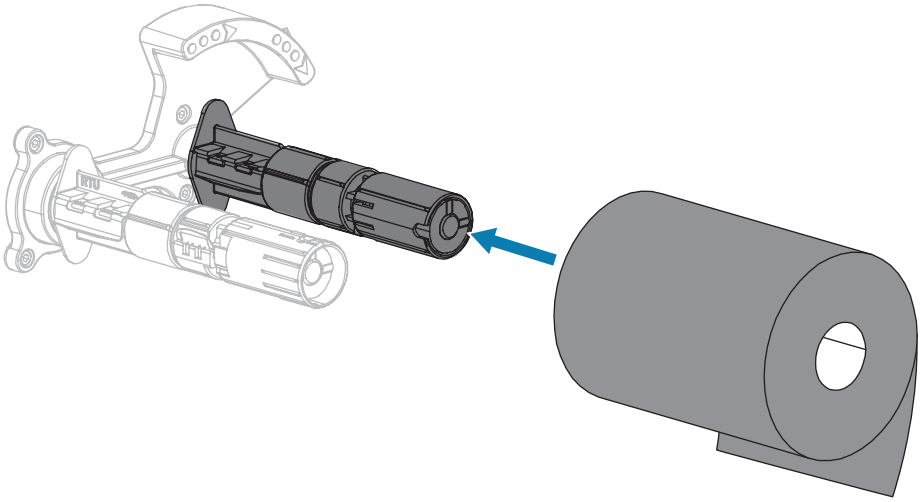

4. Your printer shipped with an empty ribbon core on the ribbon take-up spindle. If this core is no longer there, place an empty ribbon core on the ribbon take-up spindle. Push the core back as far as it will go.

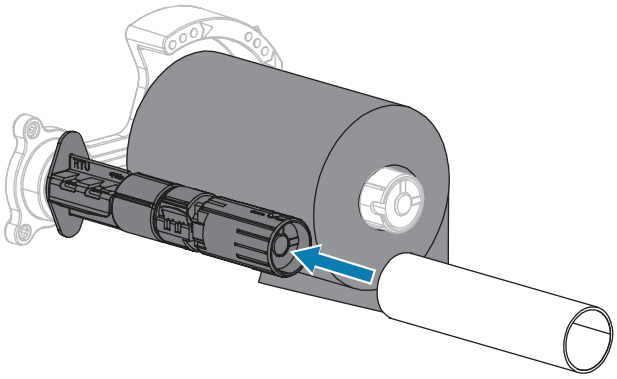

5. Bring the ribbon under the printhead assembly as shown.

**NOTE:** The printhead may be hot and could cause severe burns. Allow the printhead to cool.

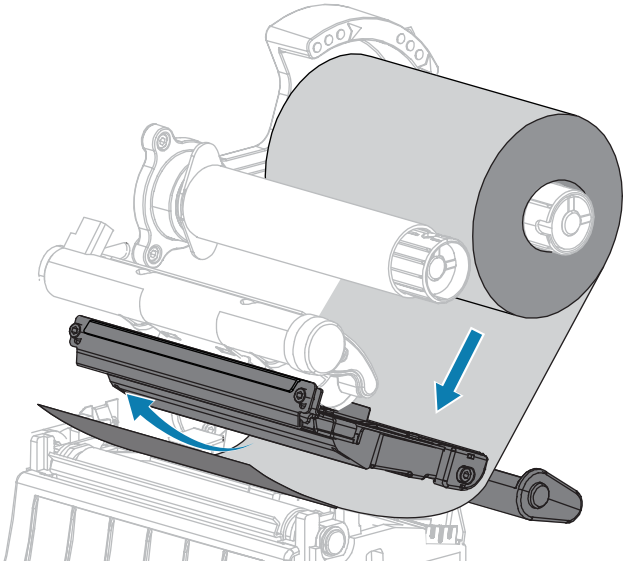

6. With the ribbon tracking as far back as it can under the printhead assembly:
   a) Wrap the ribbon around the core on the ribbon take-up spindle.
   b) Rotate the spindle several turns in the direction shown to tighten and align the ribbon.

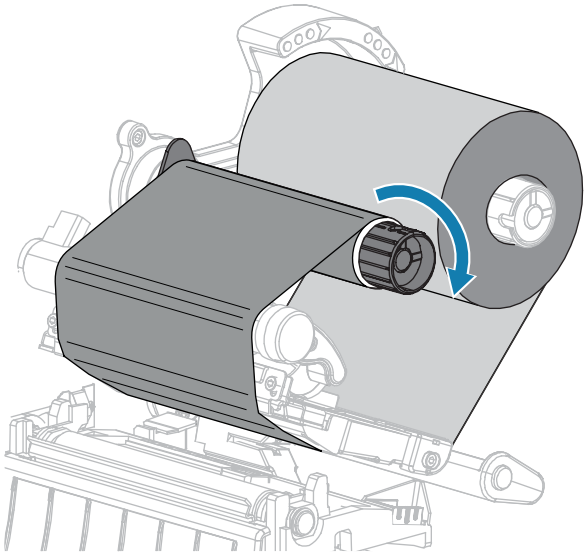

7. If media is already loaded, rotate the printhead-open lever downward until it locks the printhead in place.

   Otherwise, continue with Loading the Media.

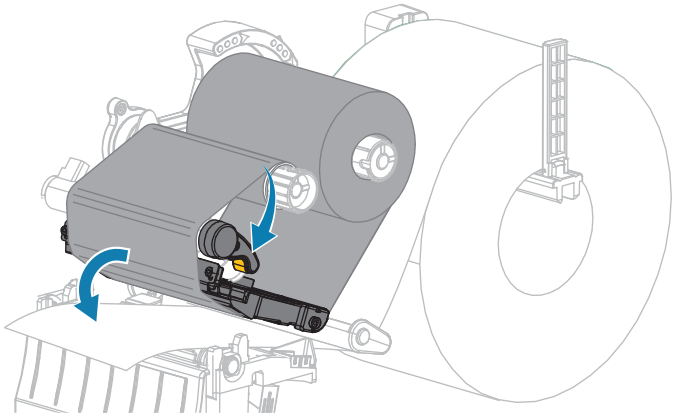

8. Close the media cover.

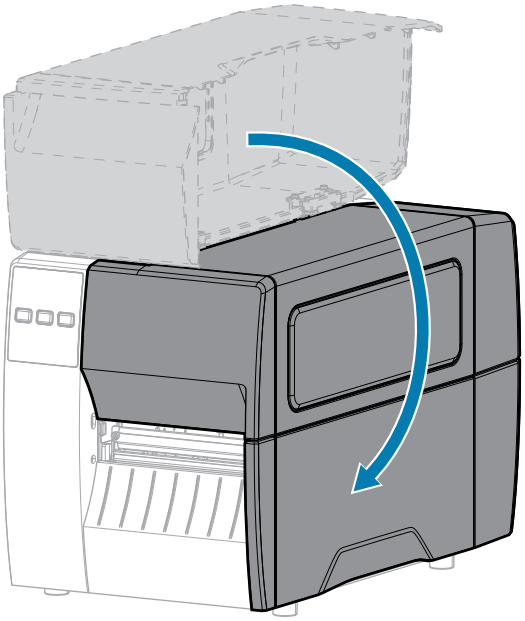

9. If necessary, press **PAUSE** to enable printing.

# Printing a Test Label and Making Adjustments

After you have loaded media, loaded ribbon (if using Thermal Transfer mode), installed the printer driver, and connected your printer to your computer, use the directions in this section to print a test label. Printing this label allows you to see if your connection is working and if you need to adjust any of the printer settings.

1. Turn off (O) the printer.
2. Press and hold **CANCEL** while turning on (I) the printer. Hold **CANCEL** until the first control panel light turns off.

   The printer prints a printer configuration label and then a network configuration label as shown in these examples.

**Figure 4** Sample Printer Configuration Label

```
PRINTER CONFIGURATION

Zebra Technologies
ZTC ZTXXX-203dpi ZPL
XXXXXX-XX-XXXX

10................ LCD CONTRAST
+10............... DARKNESS
2.0 IPS........... PRINT SPEED
+000.............. TEAR OFF
TEAR OFF.......... PRINT MODE
GAP/NOTCH......... MEDIA TYPE
REFLECTIVE........ SENSOR SELECT
832............... PRINT WIDTH
1422.............. LABEL LENGTH
................. PRINT HEAD ID
39.0IN   988MM.... MAXIMUM LENGTH
NOT CONNECTED..... USB COMM.
BIDIRECTIONAL..... PARALLEL COMM.
RS232............. SERIAL COMM.
2400.............. BAUD
8 BITS............ DATA BITS
NONE.............. PARITY
XON/XOFF.......... HOST HANDSHAKE
NONE.............. PROTOCOL
NORMAL MODE....... COMMUNICATIONS
<~>  7EH.......... CONTROL PREFIX
<^>  5EH.......... FORMAT PREFIX
<,>  2CH.......... DELIMITER CHAR
ZPL II............ ZPL MODE
CALIBRATION....... MEDIA POWER UP
CALIBRATION....... HEAD CLOSE
DEFAULT........... BACKFEED
+000.............. LABEL TOP
+0000............. LEFT POSITION
DISABLED.......... REPRINT MODE
020............... WEB SENSOR
024............... MEDIA SENSOR
255............... TAKE LABEL
027............... MARK SENSOR
027............... MARK MED SENSOR
102............... TRANS GAIN
000............... TRANS BASE
100............... TRANS LED
050............... MARK LED
DPCSWFXM.......... MODES ENABLED
................. MODES DISABLED
 832 8/MM FULL.... RESOLUTION
V72.18.1ZP15107 <-. FIRMWARE
1.3............... XML SCHEMA
6.4.1 255......... HARDWARE ID
NONE.............. OPTION BOARD
12288k.........R: RAM
65536k.........E: ONBOARD FLASH
NONE.............. FORMAT CONVERT
FW VERSION........ IDLE DISPLAY
07/20/12.......... RTC DATE
02:37............. RTC TIME
DISABLED.......... ZBI
2.1............... ZBI VERSION
READY............. ZBI STATUS
15.110 IN......... NONRESET CNTR
15.110 IN......... RESET CNTR1
15.110 IN......... RESET CNTR2
38.378 CM......... NONRESET CNTR
38.378 CM......... RESET CNTR1
38.378 CM......... RESET CNTR2
FIRMWARE IN THIS PRINTER IS COPYRIGHTED
```

**Figure 5** Sample Network Configuration Label

```
Network Configuration

Zebra Technologies
ZTC ZT620R-203dpi ZPL
76J162700886

Wired............. PRIMARY NETWORK
PrintServer....... LOAD LAN FROM?
INTERNAL WIRED.... ACTIVE PRINTSRVR

Wired*
ALL............... IP PROTOCOL
192.168.000.017... IP ADDRESS
255.255.255.000... SUBNET
192.168.000.254... GATEWAY
000.000.000.000... WINS SERVER IP
YES............... TIMEOUT CHECKING
300............... TIMEOUT VALUE
000............... ARP INTERVAL
9100.............. BASE RAW PORT
9200.............. JSON CONFIG PORT

Wireless
ALL............... IP PROTOCOL
000.000.000.000... IP ADDRESS
255.255.255.000... SUBNET
000.000.000.000... GATEWAY
000.000.000.000... WINS SERVER IP
YES............... TIMEOUT CHECKING
300............... TIMEOUT VALUE
000............... ARP INTERVAL
9100.............. BASE RAW PORT
9200.............. JSON CONFIG PORT
INSERTED.......... CARD INSERTED
02dfH............. CARD MFG ID
9134H............. CARD PRODUCT ID
ac:3f:a4:82:05:9c.. MAC ADDRESS
YES............... DRIVER INSTALLED
INFRASTRUCTURE.... OPERATING MODE
125............... ESSID
1.0............... CURRENT TX RATE
OPEN.............. WEP TYPE
WPA PSK........... WLAN SECURITY
1................. WEP INDEX
000............... POOR SIGNAL
LONG.............. PREAMBLE
NO................ ASSOCIATED
ON................ PULSE ENABLED
15................ PULSE RATE
OFF............... INTL MODE
USA/CANADA........ REGION CODE
USA/CANADA........ COUNTRY CODE
0x7FF............. CHANNEL MASK

Bluetooth
4.3.1p1........... FIRMWARE
02/13/2015........ DATE
on................ DISCOVERABLE
3.0/4.0........... RADIO VERSION
on................ ENABLED
AC:3F:A4:82:05:9D.. MAC ADDRESS
76J162700886...... FRIENDLY NAME
no................ CONNECTED
1................. MIN SECURITY MODE
nc................ CONN SECURITY MODE
supported......... iOS

FIRMWARE IN THIS PRINTER IS COPYRIGHTED
```

3. Did the label print, and was it of acceptable print quality?

| If... | Then... |
|---|---|
| The label printed and the print quality is acceptable | Your printer is ready for printing. See Installing Label Design Software on page 56. |

| If... | Then... |
| --- | --- |
| The label did not print | **a.** Make sure that you selected the correct printer driver. Try printing the label again.<br>**b.** If the label still did not print, check the connections between the printer and your computer or the printer and your network.<br>**c.** If necessary, modify the printer's settings to make them match your computer's or network's settings. See Network Settings on page 68. |
| The label prints, but with poor quality or other issues | See Printing or Print Quality Issues on page 112 for troubleshooting instructions. |

# Installing Label Design Software

Select and install the software that you will use to create label formats for your printer.

One option is ZebraDesigner, which you can download from zebra.com/zebradesigner. You can choose to use ZebraDesigner Essentials for free or purchase ZebraDesigner Professional for a more robust toolset.

**Figure 6** Sample ZebraDesigner Essentials Screen

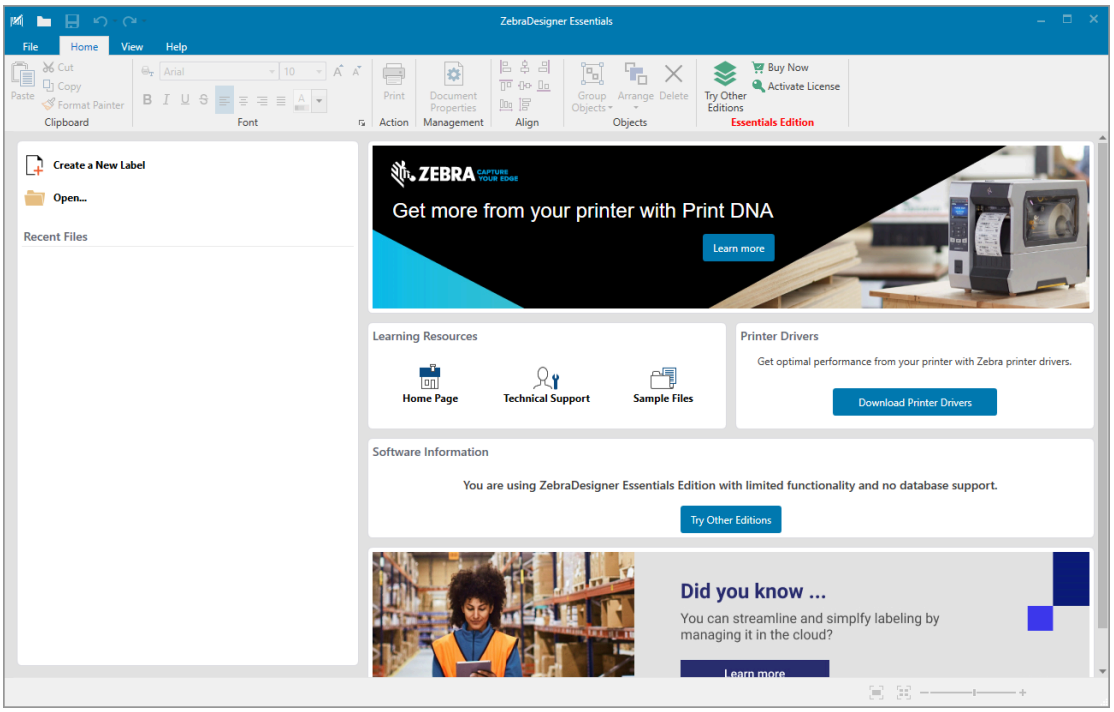

# Printer Configuration and Adjustment

This section assists you with configuration of the printer and adjustments to the printer.

## Changing Printer Settings

This section presents the printer settings that you can change and identifies tools for changing them.These tools include the following:

- The Windows driver installed previously. (See Changing Printer Settings through the Windows Driver on page 57 for more information.)
- Zebra Printer Setup Utilities:
  - Windows computers
  - Android devices
  - Apple devices
- Other ways documented in this guide. (See Other Ways to Change Printer Settings on page 58.)

### Changing Printer Settings through the Windows Driver

1. From the Windows Start Menu, go to **Printers & Scanners**.
2. Click your printer in the list of available printers, and then click **Manage**.
3. Click **Printing Preferences**.

   The ZDesigner window for your printer displays.

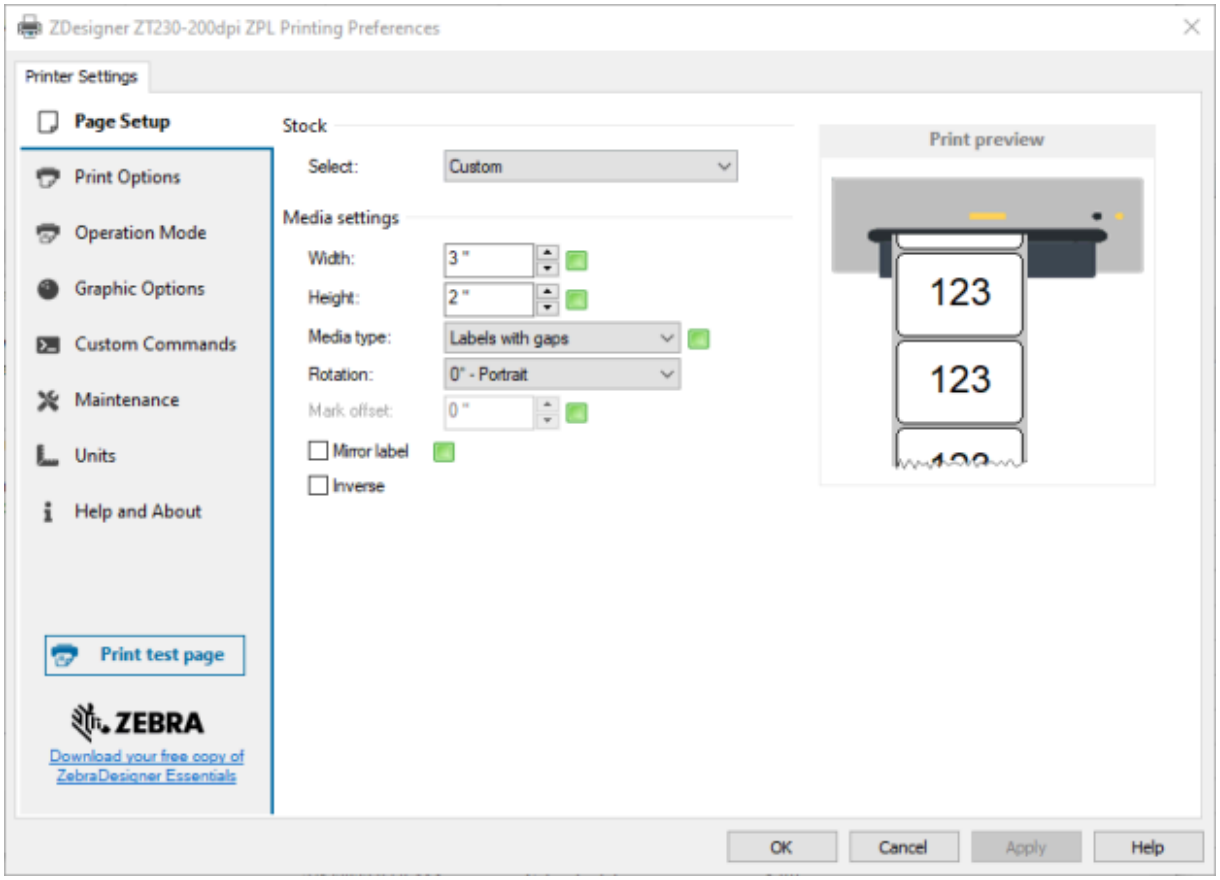


4. Change the settings as desired, and then click **OK**.

## Other Ways to Change Printer Settings

This section explains the printer parameters and includes ways to view or modify the settings through the following:

- ZPL and Set/Get/Do (SGD) commands (See the Zebra Programming Guide for more information.)
- The printer's web pages when the printer has an active wired or wireless print server connection (See the ZebraNet Wired and Wireless Print Servers User Guide for more information.)

### Print Settings

**Table 4** Print Settings

| Print Setting | Description |
|---|---|
| Print Darkness | Set the darkness to the lowest setting that provides good print quality. If you set the darkness too high, the label image may print unclearly, bar codes may not scan correctly, the ribbon may burn through, or the printhead may wear prematurely.<br>If desired, use the Evaluating Barcode Quality on page 100 to determine the optimal darkness setting. |

**Table 4** Print Settings (Continued)

| Print Setting | Description | |
|---|---|---|
| | Accepted values: | 0.0 – 30.0 |
| | Related ZPL command(s): | `^MD, ~SD` |
| | SGD command used: | `print.tone` |
| | Printer web page: | **View and Modify Printer Settings** > **General Setup** > **Darkness** |
| Print Speed | Select the speed for printing a label (given in inches per second). Slower print speeds typically yield better print quality. See also Programmable constant print speeds (per second). | |
| | Accepted values: | 203 dpi: 2, 3, 4, 5, 6, 7, 8, 9, 10<br>300 dpi: 2, 3, 4, 5, 6 |
| | Related ZPL command(s): | `^PR` |
| | SGD command used: | `media.speed` |
| Media Type | Select the type of media that you are using. | |
| | Accepted values: | • CONTINUOUS<br>• GAP/NOTCH<br>• MARK<br>If you select CONTINUOUS, you must include a label length in your label format (`^LL` if you are using ZPL). |
| | Related ZPL command(s): | `^MN` |
| | SGD command used: | `ezpl.media_type` |
| | Printer web page: | **View and Modify Printer Settings** > **Media Setup** > **Media Type** |
| Print Method | Specify if the printer is to use Direct Thermal mode (no ribbon) or Thermal Transfer mode (using thermal transfer media and ribbon). | |
| | Accepted values: | • THERMAL TRANS<br>• DIRECT THERMAL |
| | Related ZPL command(s): | `^MT` |
| | SGD command used: | `ezpl.print_method` |
| | Printer web page: | **View and Modify Printer Settings** > **Media Setup** > **Print Method** |
| Tear-Off Position | If necessary, adjust the position of the media over the tear-off bar after printing. | |

**Table 4** Print Settings (Continued)

| Print Setting | Description | |
|---|---|---|
| | Accepted values: | –120 to 120<br>• Higher numbers move the media out (the tear line moves closer to the leading edge of the next label).<br>• Lower numbers move the media in (the tear line moves closer to the edge of the label just printed).<br> 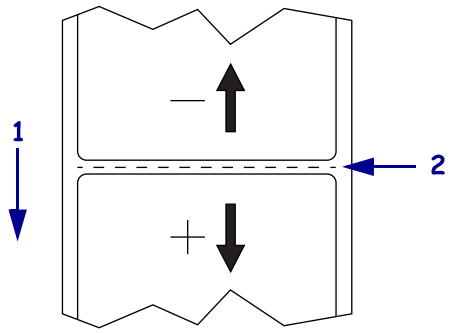 <br><br>1 – Media direction<br>2 – Factory-set tear line location at position 000 |
| | Related ZPL command(s): | ~TA |
| | SGD command used: | `ezpl.tear_off` |
| | Printer web page: | **View and Modify Printer Settings** > **General Setup** > **Tear Off** |
| Print Width | Specify the width of the labels being used, in dots. The default value is the maximum width for the printer, based on the printhead's DPI value. | |
| | Accepted values: | **NOTE:** Setting the width too narrow can result in portions of a label format not being printed on the media. Setting the width too wide wastes formatting memory and can cause the printer to print off of the label and onto the platen roller. This setting can affect the horizontal position of the label format if the image was inverted using the `^POI` ZPL II command.<br>0000 to 1248 dots |
| | Related ZPL command(s): | `^PW` |
| | SGD command used: | `ezpl.print_width` |
| | Printer web page: | **View and Modify Printer Settings** > **Media Setup** > **Print Width** |

**Table 4** Print Settings (Continued)

| Print Setting | Description | |
|---|---|---|
| Media Handling Method | Select a media handling option that is compatible with your printer options.<br>For information about how the print mode selections work with different printer options, see Determining the Media Handling Method on page 33. | |
| | Accepted values: | • TEAR OFF<br>• CUTTER<br>• PEEL |
| | Related ZPL command(s): | `^MM` |
| | SGD command used: | `media.printmode` |
| | Printer web page: | **View and Modify Printer Settings** > **General Setup** > **Print Mode** |
| Label Left Position | If necessary, shift the print position horizontally on the label. Positive numbers move the left edge of the image toward the center of the label by the number of dots selected, while negative numbers move the left edge of the image toward the left edge of the label. | |
| | Accepted values: | –9999 to 9999 |
| | Related ZPL command(s): | `^LS` |
| | SGD command used: | `zpl.left_position` |
| | Printer web page: | **View and Modify Printer Settings** > **Advanced Setup** > **Left Position** |
| Reprint Mode | When reprint mode is enabled, you can reprint the last label printed by pressing the DOWN ARROW on the printer's control panel. | |
| | Accepted values: | • ON<br>• OFF |
| | Related ZPL command(s): | `^JZ` |
| | SGD command used: | `ezpl.reprint_mode` |

**Table 4** Print Settings (Continued)

| Print Setting | Description | |
|---|---|---|
| Maximum Label Length | Set the maximum label length. | |
| | Accepted values: | 0 to the maximum label length supported by the printer<br><br>**IMPORTANT:** Specify a value that is at least 1.0 in. (25.4 mm) greater than the actual label length plus the interlabel gap. If you set the value to one that is smaller than the label length, the printer assumes that continuous media is loaded, and the printer cannot calibrate.<br><br>For example, if the label length is 6.0 inches (152 mm) including the interlabel gap, set the parameter for at least 7.0 inches (178 mm).<br><br> 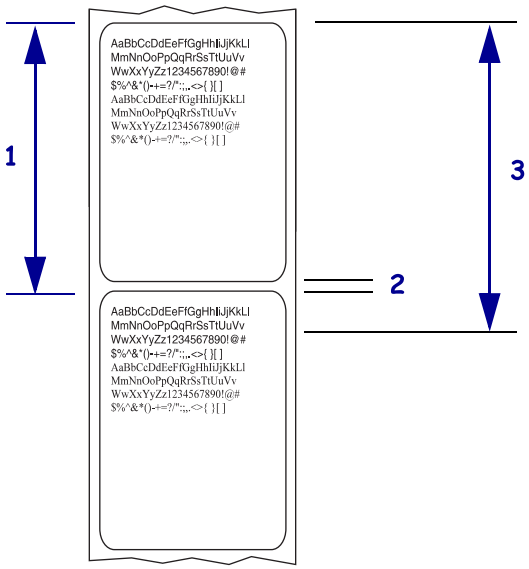 <br><br><br>1 — Label length (including interlabel gap)<br>2 — Interlabel gap<br>3 — Set the maximum label length to approximately this value |
| | Related ZPL command(s): | ^ML |
| | SGD command used: | ezpl.label_length_max |
| | Printer web page: | **View and Modify Printer Settings** > **Media Setup** > **Maximum Length** |

**Table 4** Print Settings (Continued)

| Print Setting | Description | |
|---|---|---|
| Label Length | View the calibrated label length in dots.<br>This value may be modified only under one of these conditions:<br>• the printer is set for continuous media<br>• the second parameter of ^LL is set to Y | |
| | Related ZPL command(s): | ^LL |

## Calibration and Diagnostic Tools

**Table 5** Calibration and Diagnostic Tools

| Item | Description | |
|---|---|---|
| Print Information | Print the specified information on one or more labels. | |
| | Accepted values: | • SETTINGS—prints the printer configuration label.<br>• NETWORK—prints the settings for any print server that is installed.<br>• FORMATS—prints the available formats stored in the printer's RAM, Flash memory, or optional memory card.<br>• IMAGES—prints the available images stored in the printer's RAM, Flash memory, or optional memory card.<br>• FONTS—prints the available fonts in the printer, including standard printer fonts plus any optional fonts. Fonts may be stored in RAM or Flash memory.<br>• BARCODES—prints the available bar codes in the printer. Bar codes may be stored in RAM or Flash memory.<br>• ALL—prints the previous six labels.<br>• SENSOR PROFILE—shows the sensor settings compared to actual sensor readings. To interpret the results, see Sensor Profile on page 106. |
| | Related ZPL command(s): | SETTINGS: `~WC`<br>NETWORK: `~WL`<br>SENSOR PROFILE: `~JG`<br>Others: `^WD` |
| | Control panel key(s): | SETTINGS and NETWORK: Do one of the following:<br>• Hold **CANCEL** during printer power-up.<br>• Hold **FEED** + **CANCEL** for 2 seconds when the printer is in the Ready state.<br>SENSOR PROFILE: Hold **FEED** + **CANCEL** during printer power-up. |
| | Printer web page: | **View and Modify Printer Settings** > **Print Listings on Label** |

**Table 5** Calibration and Diagnostic Tools (Continued)

| Item | Description | |
|---|---|---|
| Power-Up Action | Set the action for the printer to take during the power-up sequence. | |
| | Accepted values: | • CALIBRATE—adjusts sensor levels and thresholds, determines the label length, and feeds the media to the next web.<br>• FEED—feeds the labels to the first registration point.<br>• LENGTH—determines the label length using current sensor values, and feeds the media to the next web.<br>• NO MOTION—tells the printer not to move the media. You must manually ensure that the web is positioned correctly, or press feed to position the next web.<br>• SHORT CAL—sets the media and web thresholds without adjusting sensor gain, determines the label length, and feeds the media to the next web. |
| | Related ZPL command(s): | `^MF` |
| | SGD command used: | `ezpl.power_up_action` |
| | Printer web page: | **View and Modify Printer Settings** > **Calibration** |
| Head-Close Action | Set the action for the printer to take when you close the printhead. | |
| | Accepted values: | • CALIBRATE—adjusts sensor levels and thresholds, determines the label length, and feeds the media to the next web.<br>• FEED—feeds the labels to the first registration point.<br>• LENGTH—determines the label length using current sensor values, and feeds the media to the next web.<br>• NO MOTION—tells the printer not to move the media. You must manually ensure that the web is positioned correctly, or press feed to position the next web.<br>• SHORT CAL—sets the media and web thresholds without adjusting sensor gain, determines the label length, and feeds the media to the next web. |
| | Related ZPL command(s): | `^MF` |
| | SGD command used: | `ezpl.head_close_action` |
| | Printer web page: | **View and Modify Printer Settings** > **Calibration** |

**Table 5** Calibration and Diagnostic Tools (Continued)

| Item | Description | |
|---|---|---|
| Load Defaults | Restore specific printer, print server, and network settings back to the factory defaults. Use care when loading defaults because you will need to reload all settings that you changed manually. | |
| | Accepted values: | • FACTORY—Restores all printer settings other than the network settings back to the factory defaults. Use care when loading defaults because you will need to reload all settings that you changed manually.<br>• NETWORK—Reinitializes the printer's wired or wireless print server. With a wireless print server, the printer also reassociates with your wireless network.<br>• LAST SAVED—Loads settings from the last permanent save. |
| | Related ZPL command(s): | FACTORY: `^JUF`<br>NETWORK: `^JUN`<br>LAST SAVED: `^JUR` |
| | Control panel key(s): | FACTORY: Hold **FEED** + **PAUSE** during printer power-up to reset the printer parameters to factory values.<br>NETWORK: Hold **CANCEL** + **PAUSE** during printer power-up to reset the network parameters to factory values.<br>LAST SAVED: N/A |
| | Printer web page: | FACTORY: **View and Modify Printer Settings** > **Restore Default Configuration**<br>NETWORK: **Print Server Settings** > **Reset Print Server**<br>LAST SAVED: **View and Modify Printer Settings** > **Restore Saved Configuration** |
| Media and Ribbon Sensor Calibration | Calibrate the printer to adjust the sensitivity of the media and ribbon sensors.<br>For complete instructions on how to perform a calibration procedure, see Calibrating the Ribbon and Media Sensors on page 77. | |
| | Related ZPL command(s): | `~JC` |
| | SGD command used: | `ezpl.manual_calibration` |
| | Control panel key(s): | Hold **PAUSE** + **CANCEL** for 2 seconds to initiate calibration. |

**Table 5** Calibration and Diagnostic Tools (Continued)

| Item | Description | |
|---|---|---|
| | Printer web page: | The calibration procedure cannot be initiated through the web pages. See the following web page for settings that are set during sensor calibration:<br>**View and Modify Printer Settings** > **Calibration**<br>**IMPORTANT:**<br>Do not change these settings unless you are told to do so by Zebra Technical Support or by an authorized service technician. |
| Communication Diagnostics Mode | Use this diagnostics tool to cause the printer to output the hexadecimal values for all data received by the printer.<br>For more information, see Communication Diagnostics Test on page 107. | |
| | Accepted values: | • DISABLED<br>• ENABLED |
| | Related ZPL command(s): | `~JD` to enable<br>`~JE` to disable |
| | SGD command used: | `device.diagnostic_print` |
| | Control panel key(s): | Hold **PAUSE** + **FEED** for 2 seconds when the printer is in the Ready state. |

## Network Settings

**NOTE:** For printers purchased in the EMEA region after August 1, 2025, certain connectivity options are disabled by default. To enable these options, refer to the Zebra Link-OS PrintSecure Printer Administration Guide.

**Table 6** Network Settings

| Network Setting | Description | |
|---|---|---|
| Reset Network | This option resets the wired or wireless (WLAN) print server. You must reset the print server to allow any changes to the network settings to take effect.<br>**NOTE:** For printers with Protected Mode enabled, you need to provide the Protected Mode password to change this setting. For more information, refer to the Zebra Link-OS PrintSecure Printer Administration Guide. | |
| | Related ZPL command(s): | `~WR` |
| | SGD command used: | `device.reset` |
| | Printer web page: | **Print Server Settings** > **Factory Print Server Settings** |
| Primary Network | Specify whether the wired or wireless print server is considered primary.<br>**NOTE:** For printers with Protected Mode enabled, you need to provide the Protected Mode password to change this setting. For more information, refer to the Zebra Link-OS PrintSecure Printer Administration Guide. | |
| | Accepted values: | wired, wlan |
| | Related ZPL command(s): | `^NC` |
| | SGD command used: | `ip.primary_network` |
| IP Port | This printer setting refers to the port number that the TCP print service is listening on. Normal TCP communications from the host should be directed to this port. | |
| | SGD command used: | `ip.port` |
| | Printer web page: | **View and Modify Printer Settings** > **Network Communications Setup** > **TCP/IP Settings** |
| IP Alternate Port | This command sets the port number of the alternate TCP port.<br>**NOTE:** Print servers supporting this command will monitor both the primary port and the alternate port for connections at the same time. | |
| | SGD command used: | `ip.port_alternate` |
| | Printer web page: | **View and Modify Printer Settings** > **Network Communications Setup** > **TCP/IP Settings** |

**Table 6** Network Settings (Continued)

| Network Setting | Description | |
|---|---|---|
| Visibility Agent | When the printer is connected to a wired or wireless network, it will attempt to connect to Zebra's Asset Visibility Service via the Cloud-based Zebra Printer Connector using an encrypted, certificate-authenticated web socket connection. The printer sends Discovery Data and Settings and Alerts Data. Data printed via any label format is NOT transmitted.<br>To opt out of this feature, disable this setting. (For more information, see the "Opting Out of the Asset Visibility Agent" application note at zebra.com.)<br>**NOTE:** For printers with Protected Mode enabled, you need to provide the Protected Mode password to change this setting. For more information, refer to the Zebra Link-OS PrintSecure Printer Administration Guide. | |
| | Accepted values: | on, off |
| | SGD command used: | `weblink.zebra_connector.enable` |
| | Printer web page: | **View and Modify Printer Settings** > **Network Configuration** > **Cloud Connect Settings** |
| IP Protocol (wired or WLAN) | This parameter tells if the user (permanent) or the server (dynamic) selects the IP address. When a dynamic option is chosen, this parameter tells the method(s) by which the wired or wireless print server receives the IP address from the server.<br>**NOTE:** For printers with Protected Mode enabled, you need to provide the Protected Mode password to change this setting. For more information, refer to the Zebra Link-OS PrintSecure Printer Administration Guide. | |
| | Accepted values: | • all<br>• gleaning only<br>• rarp<br>• bootp<br>• dhcp<br>• dhcp & bootp<br>• permanent |
| | Related ZPL command(s): | `^ND` |
| | SGD command used: | Wired: `internal_wired.ip.protocol`<br>WLAN: `wlan.ip.protocol` |
| | Printer web page: | **View and Modify Printer Settings** > **Network Communications Setup** > **TCP/IP Settings** |
| IP Address (wired or WLAN) | View and, if necessary, change the printer's IP address. To save changes to this setting, set IP Protocol to PERMANENT, and then reset the print server.<br>**NOTE:** For printers with Protected Mode enabled, you need to provide the Protected Mode password to change this setting. For more information, refer to the Zebra Link-OS PrintSecure Printer Administration Guide. | |

**Table 6** Network Settings (Continued)

| Network Setting | Description | |
|---|---|---|
| | Accepted values: | 000 to 255 for each field |
| | Related ZPL command(s): | ^ND |
| | SGD command used: | Wired: `internal_wired.ip.addr`<br>WLAN: `wlan.ip.addr` |
| | Printer web page: | **View and Modify Printer Settings** > **Network Communications Setup** > **TCP/IP Settings** |
| Subnet Mask (wired or WLAN) | View and, if necessary, change the subnet mask. To save changes to this setting, set IP Protocol to PERMANENT, and then reset the print server.<br>**NOTE:** For printers with Protected Mode enabled, you need to provide the Protected Mode password to change this setting. For more information, refer to the Zebra Link-OS PrintSecure Printer Administration Guide. | |
| | Accepted values: | 000 to 255 for each field |
| | Related ZPL command(s): | ^ND |
| | SGD command used: | Wired: `internal_wired.ip.netmask`<br>WLAN: `wlan.ip.netmask` |
| | Printer web page: | **View and Modify Printer Settings** > **Network Communications Setup** > **TCP/IP Settings** |
| Gateway (wired or WLAN | View and, if necessary, change the default gateway. To save changes to this setting, set IP Protocol to PERMANENT, and then reset the print server.<br>**NOTE:** For printers with Protected Mode enabled, you need to provide the Protected Mode password to change this setting. For more information, refer to the Zebra Link-OS PrintSecure Printer Administration Guide. | |
| | Accepted values: | 000 to 255 for each field |
| | Related ZPL command(s): | ^ND |
| | SGD command used: | Wired: `internal_wired.ip.gateway`<br>WLAN: `wlan.ip.gateway` |
| | Printer web page: | **View and Modify Printer Settings** > **Network Communications Setup** > **TCP/IP Settings** |
| MAC Address | View the Media Access Control (MAC) address of the print servers. | |
| | SGD command used: | Wired: `internal_wired.mac_addr`<br>WLAN: `wlan.mac_addr` |
| | Printer web page: | **View and Modify Printer Settings** > **Network Communications Setup** > **Wireless Setup** |

**Table 6** Network Settings (Continued)

| Network Setting | Description | |
|---|---|---|
| ESSID | View and, if necessary, change the Extended Service Set Identification (ESSID) used by the wireless print server. This setting must match the value used by your wireless network.<br><br>**NOTE:** For printers with Protected Mode enabled, you need to provide the Protected Mode password to change this setting. For more information, refer to the Zebra Link-OS PrintSecure Printer Administration Guide. | |
| | Accepted values: | 32-character alphanumeric string (default 125) |
| | SGD command used: | `wlan.essid` |
| | Printer web page: | **View and Modify Printer Settings** > **Network Communications Setup** > **Wireless Setup** |
| Bluetooth | Set if the printer is enabled for Bluetooth device pairing.<br><br>**NOTE:** For printers with Protected Mode enabled, you need to provide the Protected Mode password to change this setting. For more information, refer to the Zebra Link-OS PrintSecure Printer Administration Guide. | |
| | Accepted values: | • ON—Enables the Bluetooth radio.<br>• OFF—Disables the Bluetooth radio. |
| | SGD command used: | `bluetooth.enable` |
| Bluetooth Discovery | Set if the printer is “Discoverable” for Bluetooth device pairing.<br><br>**NOTE:** For security, leave this set to OFF when Bluetooth is not in use.<br><br>**NOTE:** For printers with Protected Mode enabled, you need to provide the Protected Mode password to change this setting. For more information, refer to the Zebra Link-OS PrintSecure Printer Administration Guide. | |
| | Accepted values: | • ON—Enables Bluetooth discoverable mode.<br>• OFF—Disables Bluetooth discoverable mode. |
| | SGD command used: | `bluetooth.discoverable` |
| Bluetooth Friendly Name | This command sets the friendly name, which is used during service discovery. For changes to take effect, you must power cycle the printer or issue the `device.reset` command.<br><br>If you do not set a friendly name, the setting will default to the printer serial number.<br><br>**NOTE:** For printers with Protected Mode enabled, you need to provide the Protected Mode password to change this setting. For more information, refer to the Zebra Link-OS PrintSecure Printer Administration Guide. | |
| | Accepted values: | 17-character text strng |
| | SGD command used: | `bluetooth.friendly_name` |

**Table 6** Network Settings (Continued)

| Network Setting | Description | |
|---|---|---|
| Bluetooth Minimum Security mode | This printer setting parameter sets the Bluetooth Minimum Security mode. Minimum Security Mode provides for different levels of security, depending on the printer radio version and printer firmware. See the Zebra Programming Guide at zebra.com/manuals for more information.<br><br>**NOTE:** For printers with Protected Mode enabled, you need to provide the Protected Mode password to change this setting. For more information, refer to the Zebra Link-OS PrintSecure Printer Administration Guide. | |
| | Accepted values: | 1, 2, 3, 4 |
| | SGD command used: | `bluetooth.minimum_security_mode` |
| Bluetooth Address | View the printer's Bluetooth MAC Address. | |
| | SGD command used: | `bluetooth.address` |
| Bluetooth Specification Version | View the Bluetooth library version number. | |
| | SGD command used: | `bluetooth.version` |
| Bluetooth Auth. PIN | Set the PIN used when Bluetooth authentication is enabled.<br><br>**NOTE:** For printers with Protected Mode enabled, you need to provide the Protected Mode password to change this setting. For more information, refer to the Zebra Link-OS PrintSecure Printer Administration Guide. | |
| | SGD command used: | `bluetooth.bluetooth_pin` (to set the PIN)<br>`bluetooth.authentication` (to enable authentication) |
| Bluetooth Bonding | Controls whether the Bluetooth stack will "bond" or save link keys for devices that successfully connect to the printer.<br><br>**NOTE:** For printers with Protected Mode enabled, you need to provide the Protected Mode password to change this setting. For more information, refer to the Zebra Link-OS PrintSecure Printer Administration Guide. | |
| | Accepted values: | ON—Enables Bluetooth bonding.<br>OFF—Disables Bluetooth bonding. |
| | SGD command used: | `bluetooth.bonding` |

## Language Settings

**Table 7** Language Settings

| Language Setting | Description | |
|---|---|---|
| Command Language | Select the appropriate command language. | |
| | Accepted values: | **NOTE:** Not all values are accepted on all printers. Use the `! U1 getvar "allcv"` command to see the range of values that your printer supports. Values other than those listed may be available depending on the firmware version being used.<br>• EPL_ZPL<br>• EPL<br>• ZPL<br>• HYBRID_XML_ZPL<br>• APL-D<br>• APL-I |
| | SGD command used: | `device.languages` |
| Emulation | If any Virtual Device/Emulation apps are installed on your printer, you may enable/disable them. To view if any are installed on the printer, use the `getvar` form of one of the SGD commands below.<br>For more information, go to the User Guide for the appropriate Virtual Device/Emulation, or contact your local reseller.) | |
| | SGD command used: | `apl.enable`<br>`device.languages` |

## Sensor Settings

For information about sensor calibration, see Calibrating the Ribbon and Media Sensors on page 77.

**Table 8** Sensor Settings

| Sensor Setting | Description | |
|---|---|---|
| Sensor Type | Select the media sensor that is appropriate for the media that you are using. The reflective sensor can be used with all media types. The transmissive sensor should be used only for simple gap media. | |
| | Accepted values: | • TRANSMISSIVE<br>• REFLECTIVE |
| | Related ZPL command(s): | `^JS` |
| | SGD command used: | `device.sensor_select` |
| | Printer web page: | **View and Modify Printer Settings** > **Media Setup** |
| Label Sensor | Set the sensitivity of the label sensor.<br>**IMPORTANT:** This value is set during sensor calibration. Do not change this setting unless you are told to do so by Zebra Technical Support or by an authorized service technician. | |
| | Accepted values: | 0 – 255 |
| | SGD command used: | `ezpl.label_sensor` |
| | Printer web page: | **View and Modify Printer Settings** > **Calibration** |
| Take Label | Set the intensity of the take label LED.<br>**IMPORTANT:** This value is set during sensor calibration. Do not change this setting unless you are told to do so by Zebra Technical Support or by an authorized service technician. | |
| | Accepted values: | 0 – 255 |
| | SGD command used: | `ezpl.take_label` |
| | Printer web page: | **View and Modify Printer Settings** > **Calibration** |

## Port Settings

**Table 9** Port Settings

| Port Setting | Description | |
|---|---|---|
| Baud Rate | Select the baud value that matches the one being used by the host computer. | |
| | Accepted values: | • 115200<br>• 57600<br>• 38400<br>• 28800<br>• 19200<br>• 14400<br>• 9600<br>• 4800 |
| | Related ZPL command(s): | ^SC |
| | SGD command used: | `comm.baud` |
| | Printer web page: | **View and Modify Printer Settings** > **Serial Communications Setup** |
| Data Bits | Select the data bits value that matches the one being used by the host computer. | |
| | Accepted values: | 7 or 8 |
| | Related ZPL command(s): | ^SC |
| | SGD command used: | `comm.data_bits` |
| | Printer web page: | **View and Modify Printer Settings** > **Serial Communications Setup** |
| Parity | Select the parity value that matches the one being used by the host computer. | |
| | Accepted values: | • NONE<br>• EVEN<br>• ODD |
| | Related ZPL command(s): | ^SC |
| | SGD command used: | `comm.parity` |
| | Printer web page: | **View and Modify Printer Settings** > **Serial Communications Setup** |
| Host Handshake | Select the handshake protocol that matches the one being used by the host computer. | |
| | Accepted values: | • XON/XOFF<br>• RTS/CTS<br>• DSR/DTR |
| | Related ZPL command(s): | ^SC |

**Table 9** Port Settings (Continued)

| Port Setting | Description | |
|---|---|---|
| | SGD command used: | `comm.handshake` |
| | Printer web page: | **View and Modify Printer Settings** > **Serial Communications Setup** |

# Calibrating the Ribbon and Media Sensors

Printer calibration adjusts the sensitivity of the media and ribbon sensors. It also helps ensure proper alignment of the image being printed and optimal print quality.

Perform calibration in the following situations:

- You switched to a different size or type of ribbon or media.
- The printer experiences any of the following issues:
  - Skips labels.
  - The printed image wanders or drifts side to side or up and down.
  - Ribbon is not being detected either when it is installed or when it runs out.
  - Non-continuous labels are being treated as continuous labels.

## Performing Auto Calibration

You can set the printer to perform an auto calibration (`CALIBRATE`) or a short calibration (`SHORT CAL`) using the `POWER UP ACTION` or `HEAD CLOSE ACTION` parameters.

- `CALIBRATE`—Adjusts sensor levels and thresholds, determines the label length, and feeds the media to the next web.
- `SHORT CAL`—Sets the media and web thresholds without adjusting sensor gain, determines the label length, and feeds the media to the next web.

See Power-Up Action or Power-Up Action for details

## Performing Manual Calibration

You may need to manually calibrate the printer if you see issues with the print output.

1. On the control panel, press and hold **PAUSE** and **CANCEL** for 2 seconds.

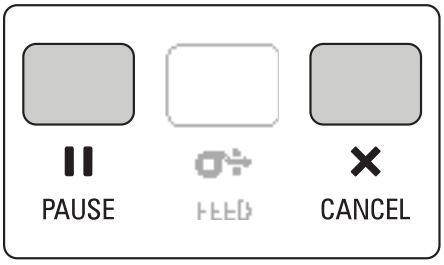


   The status and pause lights flash yellow once. Then the pause light blinks yellow.

2. Release the printhead assembly.

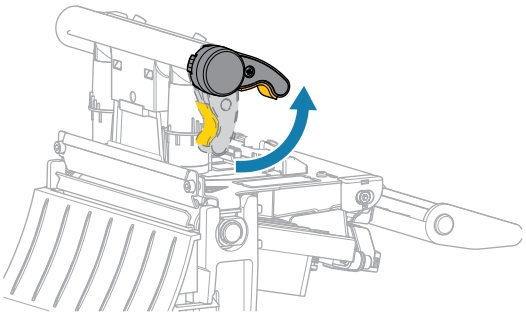

As the printhead lever rotates upward, the printhead assembly pivots upward.

3. Extend the media approximately 150 mm (6 in.) out of the printer, and then remove the exposed labels so that only the liner remains.

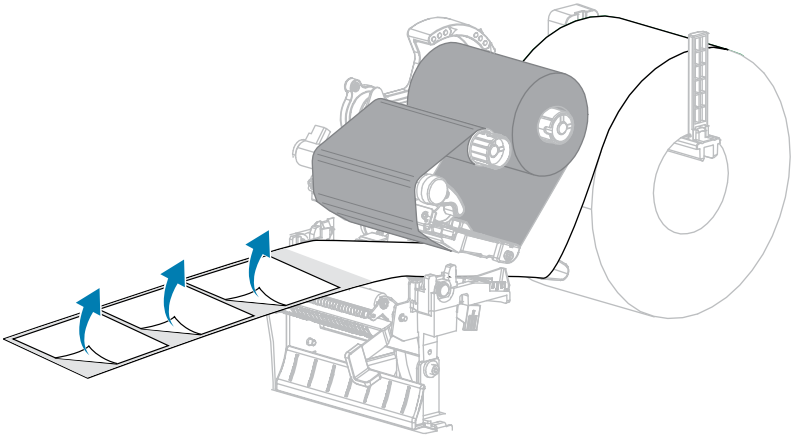

4. Pull the media into the printer so that only the backing is between the media sensors.

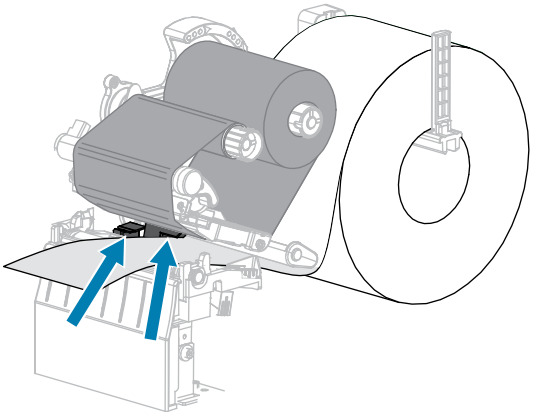

5. Move the ribbon (if used) to the right, away from the sensors.
6. Close the printhead assembly.

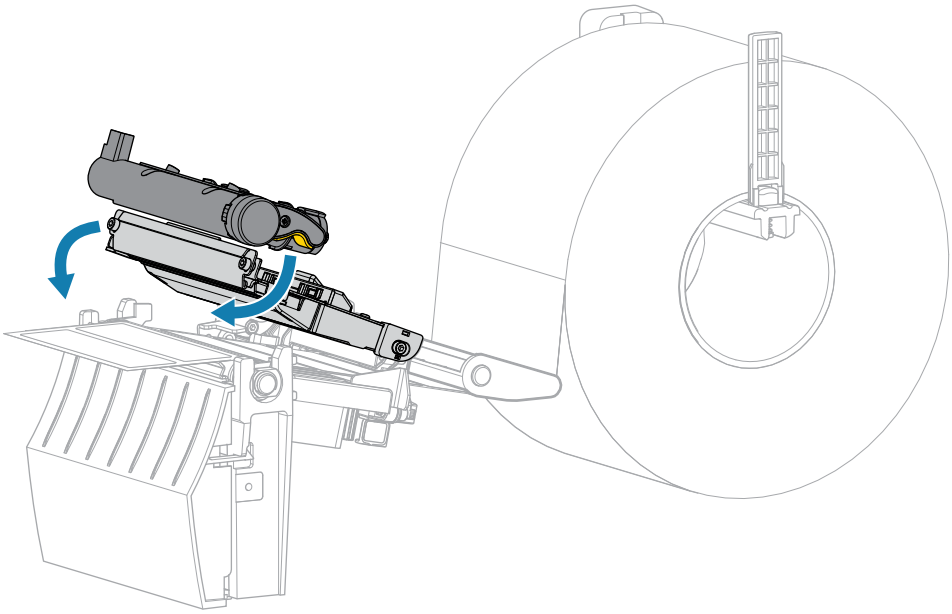

7. Press ❚❚ **PAUSE** to begin calibration.

   The pause light turns off, and the supplies light flashes yellow. The process is complete when the supplies light turns off and the pause light turns yellow.

8. Release the printhead assembly.

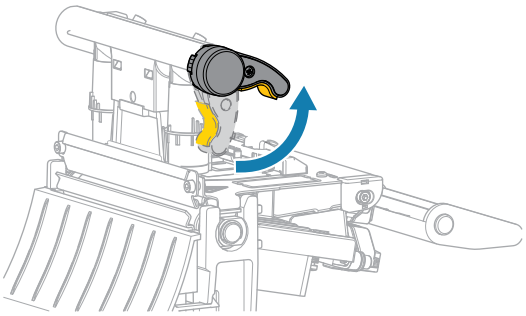

   As the printhead lever rotates upward, the printhead assembly pivots upward.

9. Reload the ribbon (if used) by moving it to the left and straightening it, and turn the ribbon take-up spindle to take up the slack.

10. Pull the media forward until a label is positioned between the sensors.

11. Close the printhead assembly.

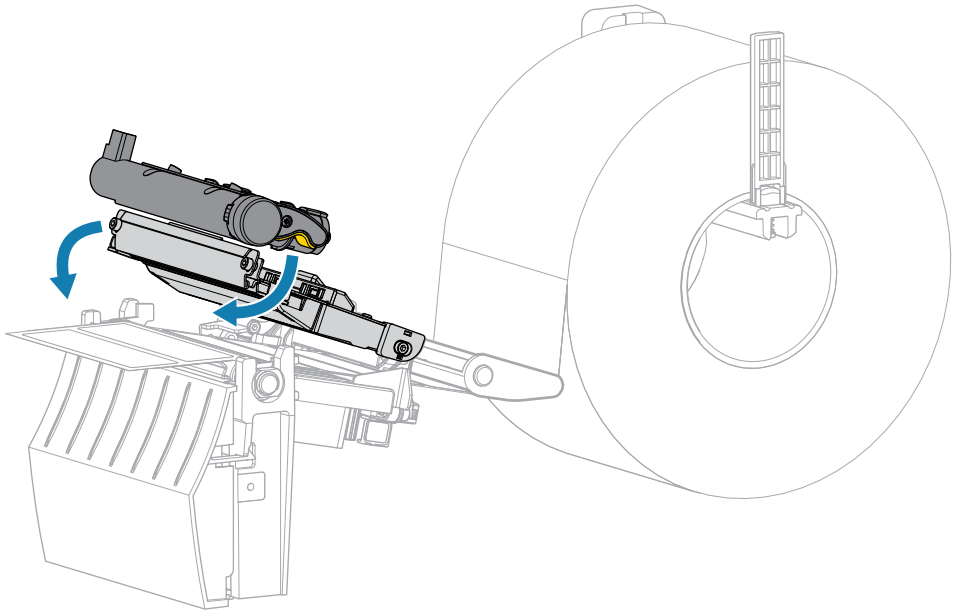

12. Press **PAUSE** to complete calibration.

    The supplies light flashes yellow. The process is complete when the supplies light turns off and the pause light turns yellow.

13. Press **PAUSE** again to enable printing.

14. Press **FEED** to verify that a label feeds to the correct position.

## Adjusting the Printhead Pressure

You may need to adjust printhead pressure if printing is too light on one side, if you use thick media, or if the media drifts from side to side during printing. Use the lowest printhead pressure necessary to produce good print quality.

The printhead pressure adjustment dials have setting marks from 1 to 4 in half-mark increments.

**Figure 7** Printhead Pressure Adjustment Dials

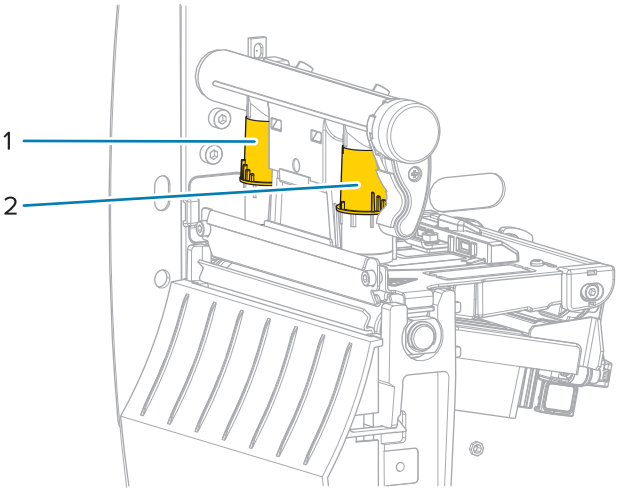


| | |
|---|---|
| 1 | Inside dial |
| 2 | Outside dial |

Begin with the following pressure settings based on your media width, and then make adjustments if necessary.

**Table 10** Starting Points for Printhead Pressure

| Media Width | Inside Dial Setting | Outside Dial Setting |
|---|---|---|
| ≥ 89 mm (≥ 3.5 in.) | 2 | 2 |
| 76 mm (3 in.) | 2.5 | 1.5 |
| 51 mm (2 in.) | 3 | 1 |
| 25 mm (1 in. | 4 | 1 |

If necessary, adjust the printhead pressure adjustment dials as follows:

| If the Media... | Then... |
|---|---|
| Requires higher pressure to print well | Increase both dials one position.<br> 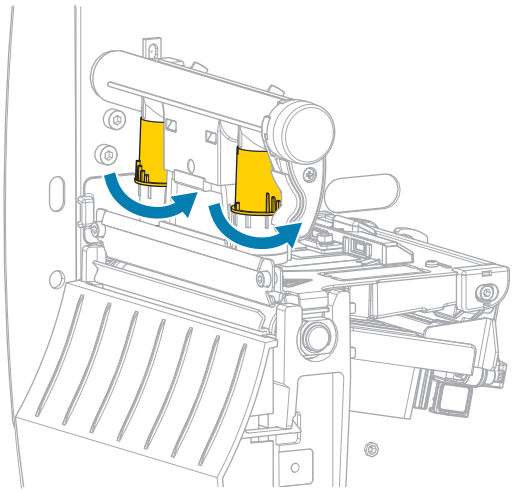 |
| Shifts left while printing | Increase the outside dial setting one position.<br> 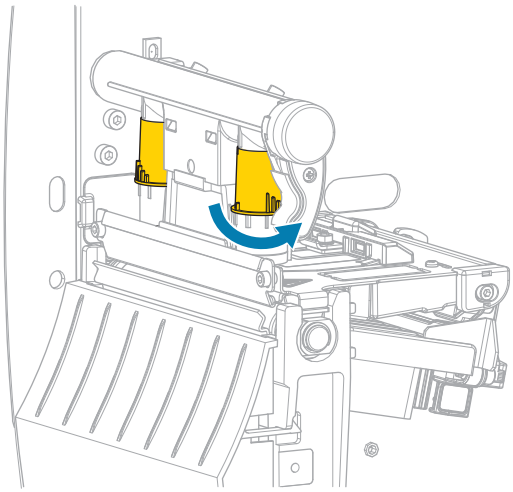 <br>OR<br>Decrease the inside dial setting one position.<br> 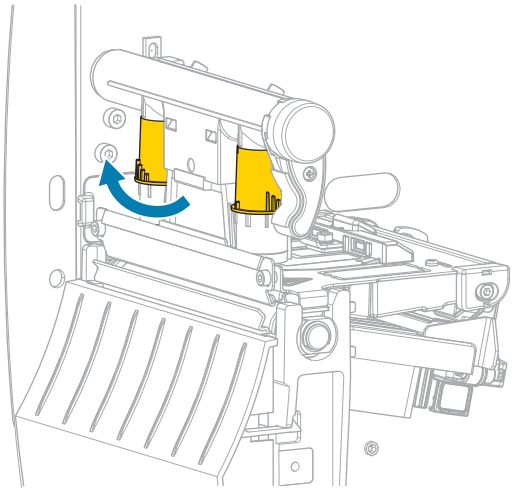 |

| If the Media... | Then... |
|---|---|
| Shifts right while printing | Increase the inside dial setting one position.<br> 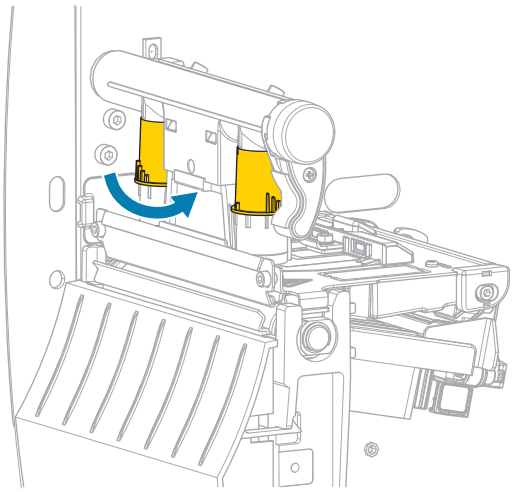 <br>OR<br>Decrease the outside dial setting one position.<br> 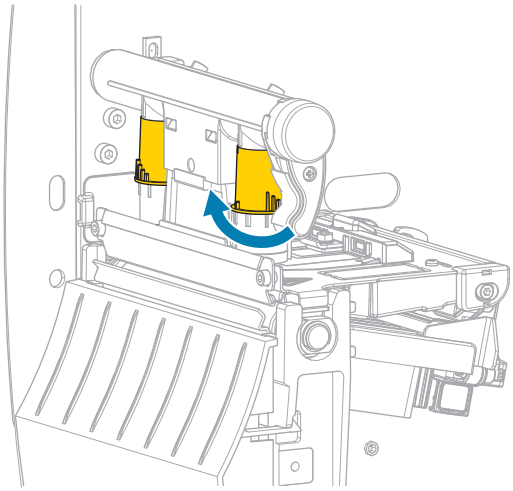 |
| Prints too lightly on the left side of the label. | Increase the inside dial setting one position.<br> 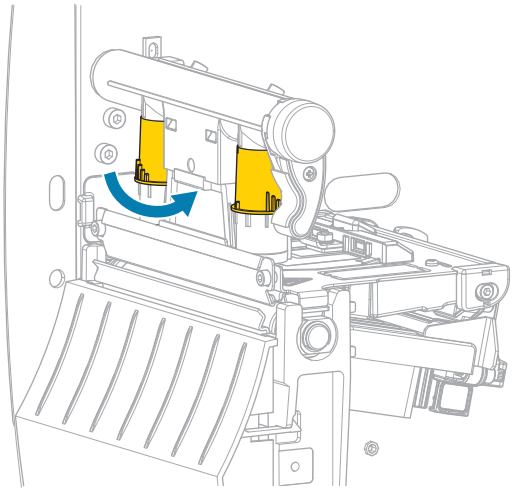 |

| If the Media... | Then... |
|---|---|
| Prints too lightly on the right side of the label. | Increase the outside dial setting one position. 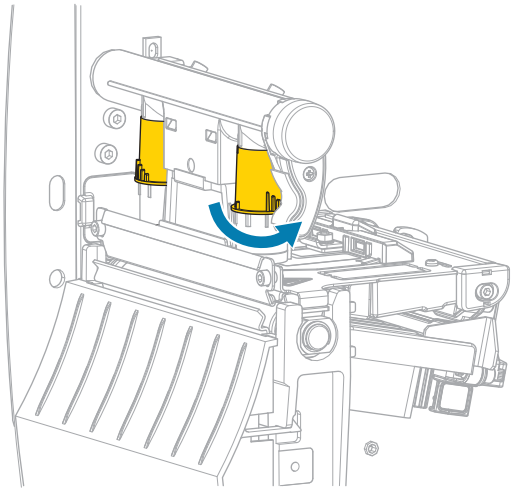 |

# Adjusting Ribbon Tension

For the printer to operate correctly, the ribbon supply spindle and ribbon take-up spindle must use the same tension setting (normal or low tension). Use the normal tension setting seen here for most applications. If you are using narrow ribbon or experience certain ribbon issues, you may need to lower the ribbon tension.

## Normal Tension Setting

To place the ribbon spindles in the normal position, firmly pull out each spindle end cap until it extends and clicks in place. Use this setting for most applications.

**Figure 8** Normal Tension Setting (Spindle End Caps Pulled Out)

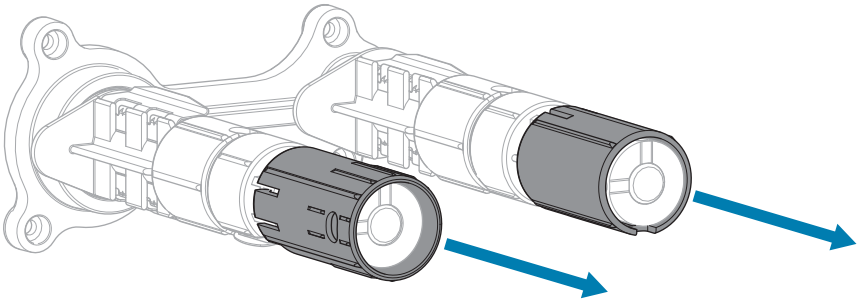

## Low Tension Setting

To place a spindle in the low-tension position, firmly push in the end cap until it retracts and clicks in place. Use this setting only when necessary, such as if the ribbon causes scuff marks at the beginning of a roll or if normal tension causes the ribbon to stall at the end of the roll.

**Figure 9** Ribbon Spindles— Low Tension Setting (Spindle End Caps Pushed In)

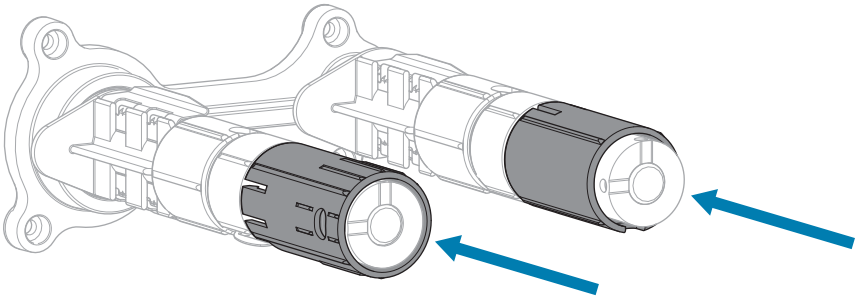

# Routine Maintenance

This section provides routine cleaning and maintenance procedures.

## Cleaning Schedule and Procedures

Routine preventive maintenance is a crucial part of normal printer operation. By taking good care of your printer, you can minimize the potential problems that you might have with it and help to achieve and to maintain your standards for print quality.

Over time, the movement of media or ribbon across the printhead wears through the protective ceramic coating, exposing and eventually damaging the print elements (dots). To avoid abrasion:

- Clean the printhead frequently.
- Minimize printhead pressure and burn temperature (darkness) settings by optimizing the balance between the two.
- When using Thermal Transfer mode, ensure that the ribbon is as wide or wider than the media to prevent exposing the printhead elements to the more abrasive label material.

**IMPORTANT:** Zebra is not responsible for damage caused by the use of cleaning fluids on this printer.

Specific cleaning procedures are provided on the following pages. This table shows the recommended cleaning schedule. These intervals are intended as guidelines only. You may have to clean more often, depending upon your application and media.

**Table 11** Recommended Cleaning Schedule

| Area | Method | Interval |
|---|---|---|
| Printhead | Solvent* | Direct Thermal Mode: After every roll of media (or 500 feet of fanfold media).<br>Thermal Transfer Mode: After every roll of ribbon. |
| Platen roller | Solvent* | |
| Media sensors | Air blow | |
| Ribbon sensor | Air blow | |
| Media path | Solvent* | |
| Ribbon path | Solvent* | |
| Pinch roller (part of Peel-Off option) | Solvent* | |

**Table 11** Recommended Cleaning Schedule (Continued)

| Area | | Method | Interval |
|---|---|---|---|
| Cutter module | If cutting continuous, pressure-sensitive media | Solvent* | After every roll of media (or more often, depending upon your application and media). |
| | If cutting tag stock or label liner material | Solvent* and air blow | After every two or three rolls of media. |
| Tear-off/peel-off bar | | Solvent* | Once a month. |
| Take-label sensor | | Air blow | Once every six months. |

* Zebra recommends using Preventive Maintenance Kit (part number 47362). In place of the Preventive Maintenance Kit, you may use a lint-free cloth dipped in 99.7% isopropyl alcohol.

## Cleaning the Exterior, the Media Compartment, and the Sensors

Over time, dust, grime, and other debris may build up on the outside and inside of your printer, particularly in a harsh operating environment.

### Printer Exterior

You may clean the exterior surfaces of the printer with a lint-free cloth and a small amount of a mild detergent, if necessary. Do not use harsh or abrasive cleaning agents or solvents.

**IMPORTANT:**

Zebra is not responsible for damage caused by the use of cleaning fluids on this printer.

### Media Compartment and Sensors

To clean the sensors:

1. Brush, air blow, or vacuum any accumulated paper lint and dust away from the media and ribbon paths.
2. Brush, air blow, or vacuum any accumulated paper lint and dust away from the sensors.

## Cleaning the Printhead and Platen Roller

Inconsistent print quality, such as voids in the barcode or graphics, may indicate a dirty printhead. For the recommended cleaning schedule, see Table 11 Recommended Cleaning Schedule on page 86.

**CAUTION—PRODUCT DAMAGE:** For printers with a peel assembly, keep the peel assembly closed while cleaning the platen roller to reduce the risk of bending the tear-off/peel-off bar.

**CAUTION—ESD:** Before touching the printhead assembly, discharge any built-up static electricity by touching the metal printer frame or by using an anti-static wriststrap and mat.

1. Open the media cover.

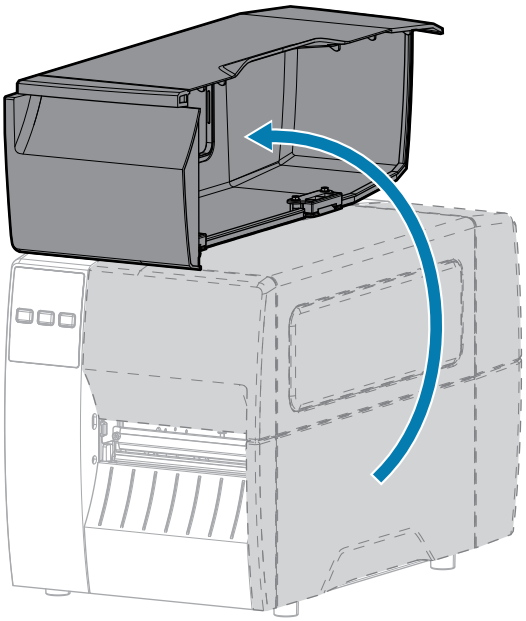

2. Release the printhead assembly.

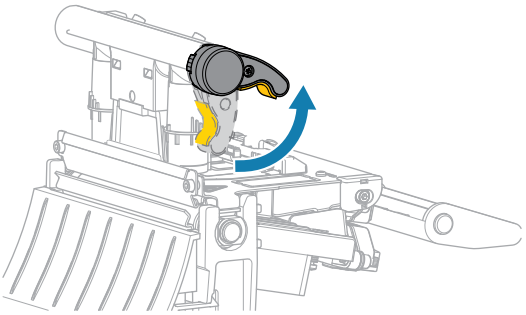

As the printhead lever rotates upward, the printhead assembly pivots upward.

3. Remove the ribbon (if used) and the media.
4. Using the swab from a Zebra Preventive Maintenance Kit, wipe along the brown strip on the printhead assembly from end to end. In place of the Preventive Maintenance Kit, you may use a clean swab dipped in 99.7% isopropyl alcohol. Allow the solvent to evaporate.

**CAUTION—HOT SURFACE:** The printhead may be hot and could cause severe burns. Allow the printhead to cool.

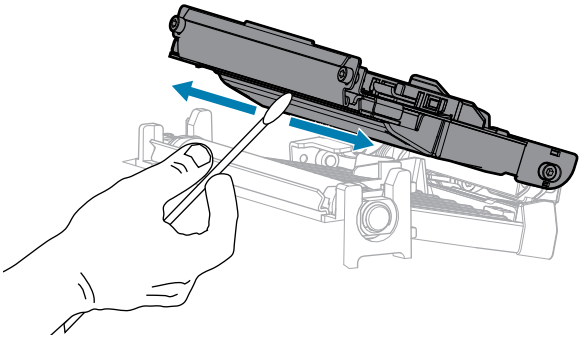

5. While manually rotating the platen roller, clean it thoroughly with the swab. Allow the solvent to evaporate.

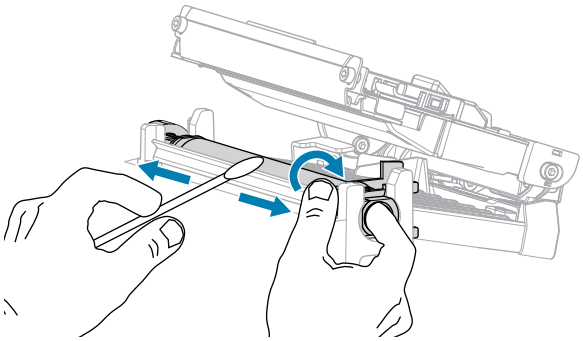

6. Reload the ribbon (if used) and the media. For instructions, see Loading the Ribbon on page 50 or Loading the Media on page 34.
7. Close the printhead assembly.

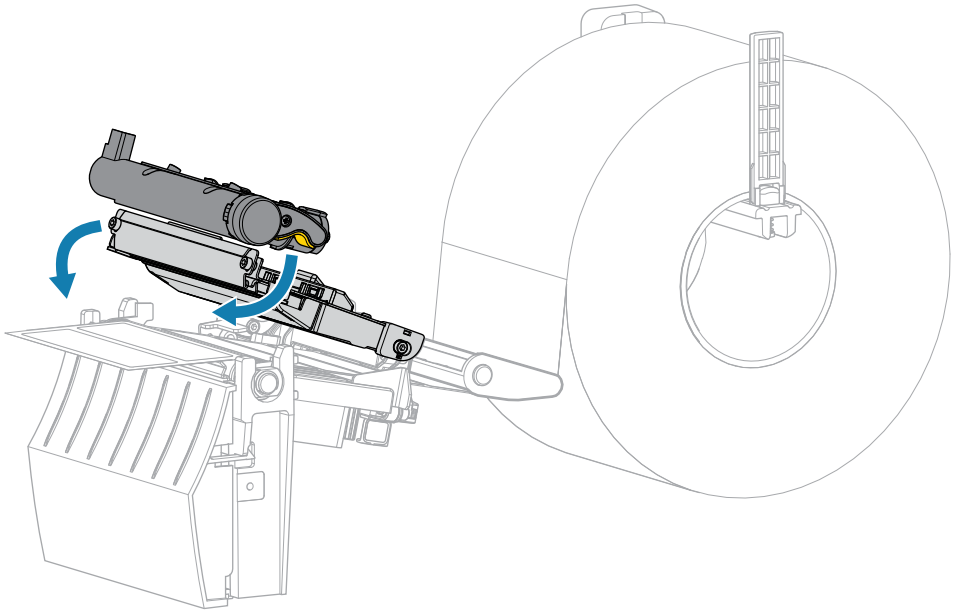

8. Close the media cover.

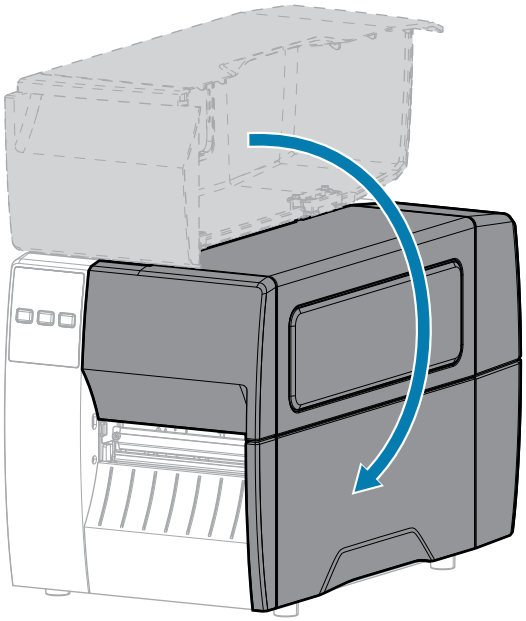

9. Press **PAUSE** to exit pause mode and enable printing.

   The printer may perform a label calibration or feed a label, depending on your settings.

   **NOTE:** If performing this procedure does not improve print quality, try cleaning the printhead with Save-A-Printhead cleaning film. This specially coated material removes contamination buildup without damaging the printhead. Call your authorized Zebra reseller for more information.

## Cleaning the Peel Assembly

The peel assembly consists of several spring-loaded rollers to ensure the proper roller pressure. Clean the pinch roller and tear-off/peel-off bar if adhesive buildup begins to affect peel performance.

**CAUTION:** Do not use your left hand to assist in closing the Peel assembly. The top edge of the Peel roller/assembly could pinch your fingers.

If adhesive buildup affects peel-off performance, complete these steps.

1. Open the media cover.

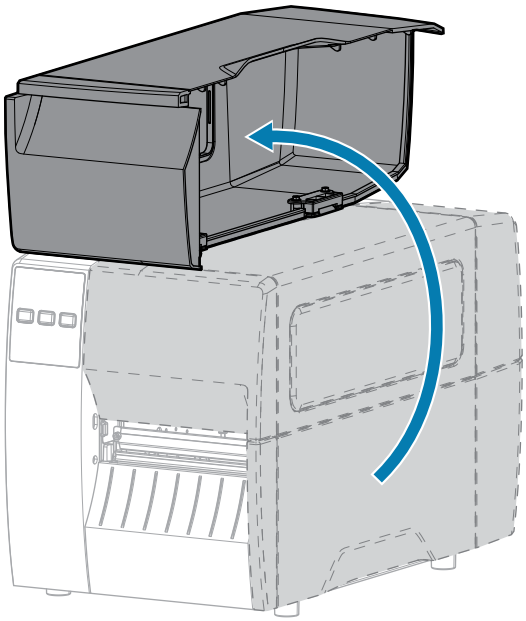

**CAUTION:** The printhead may be hot and could cause severe burns. Allow the printhead to cool.

2. Release the printhead assembly.

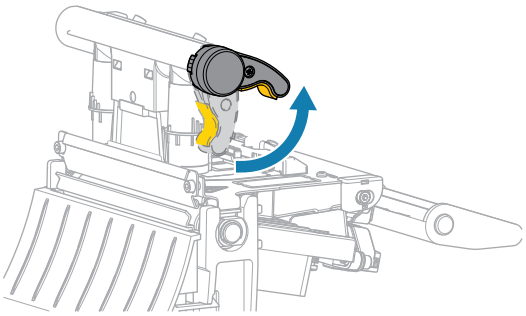

As the printhead lever rotates upward, the printhead assembly pivots upward.

3. Push down the peel-off mechanism release lever to open the peel assembly.

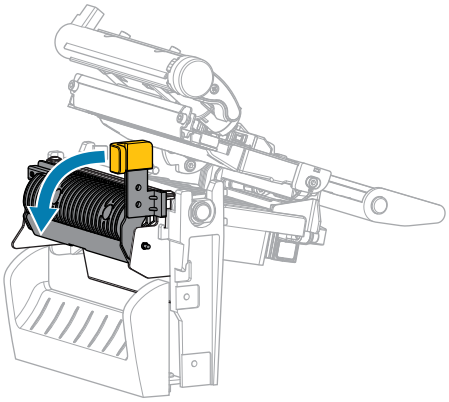

4. Remove any media liner to expose the pinch roller.

5. While manually rotating the pinch roller, clean it thoroughly with the swab from the Preventive Maintenance Kit (part number 47362). In place of the Preventive Maintenance Kit, you may use a clean swab dipped in 99.7% isopropyl alcohol. Allow the solvent to evaporate.

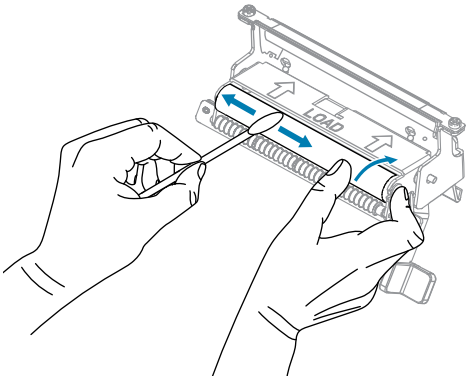


6. Use the swab to remove excess adhesive from the tear-off/peel-off bar. Allow the solvent to evaporate.

**CAUTION—PRODUCT DAMAGE:** Apply minimum force when cleaning the tear-off/peel-off bar. Excessive force can cause the tear-off/peel-off bar to bend, which could have a negative effect on peel performance.

7. Reload the media liner through the peel mechanism. For instructions, see Using Peel Mode on page 42.

8. Close the peel assembly using the peel-off mechanism release lever.

**CAUTION:** Use the peel-off mechanism release lever and your right hand to close the peel assembly. Do not use your left hand to assist in closing. The top edge of the peel roller/ assembly could pinch your fingers.

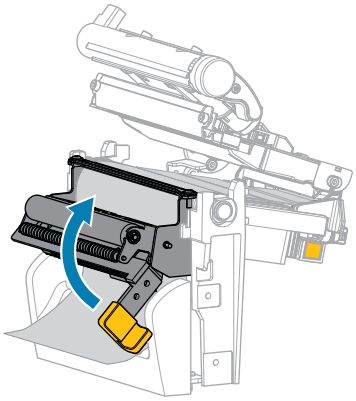

9. Close the printhead assembly.

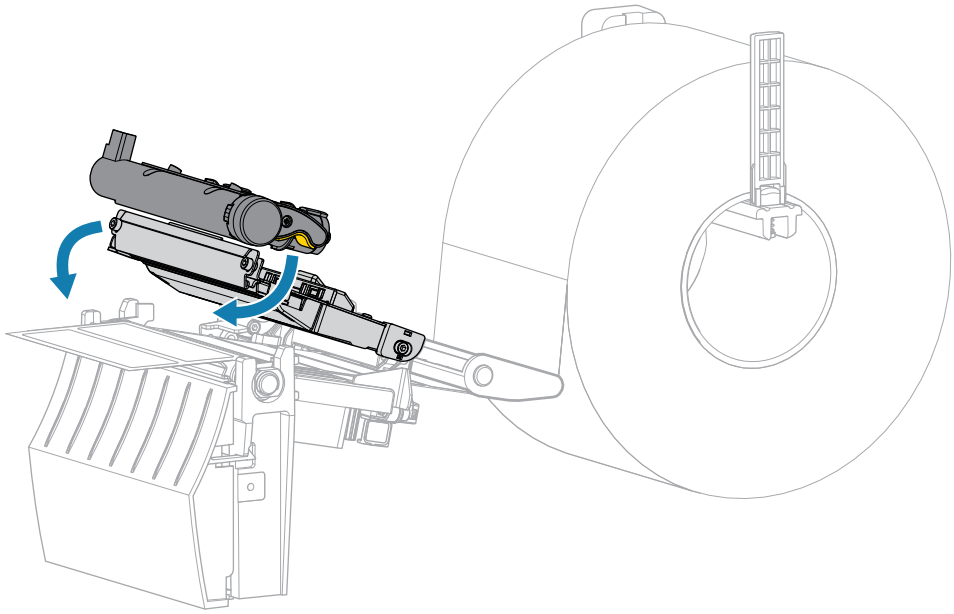

10. Close the media cover.

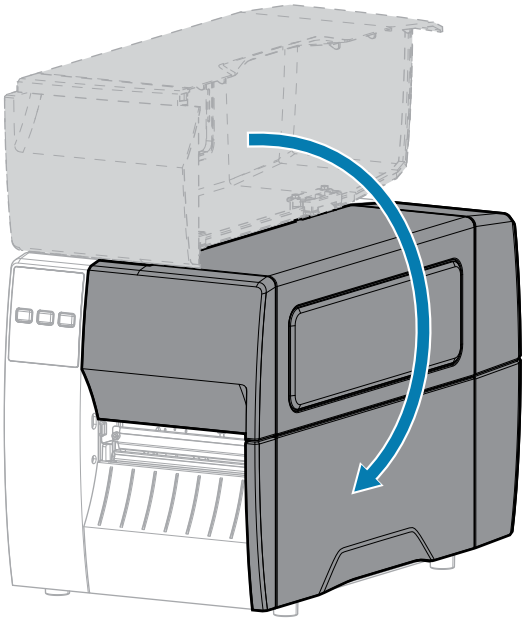

11. Press **PAUSE** to exit pause mode and enable printing.

    The printer may perform a label calibration or feed a label, depending on your settings.

## Cleaning and Lubricating the Cutter Module

If the cutter is not cutting the labels cleanly or if it jams with labels, clean the cutter.

**CAUTION:** For personnel safety, always power off and unplug the printer before performing this procedure.

1. Open the media cover.

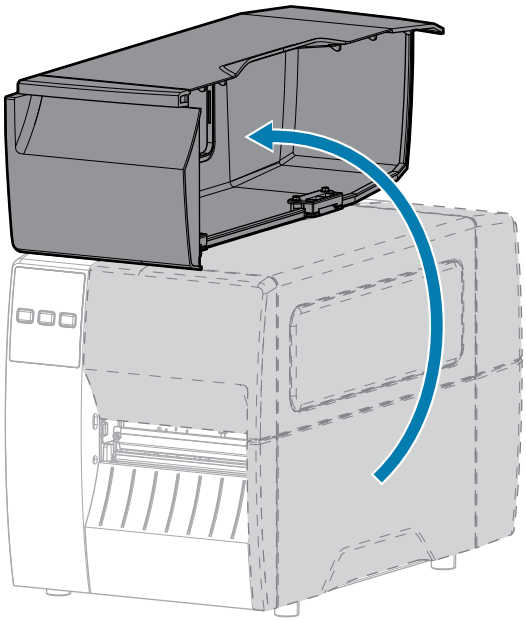

2. Turn off (O) the printer and disconnect the AC power cord.
3. Remove media that is loaded through the cutter module.
4. Loosen and remove the thumbscrew and lock washer on the cutter shield.

**CAUTION:** The cutter blade is sharp. Do not touch or rub the blade with your fingers.

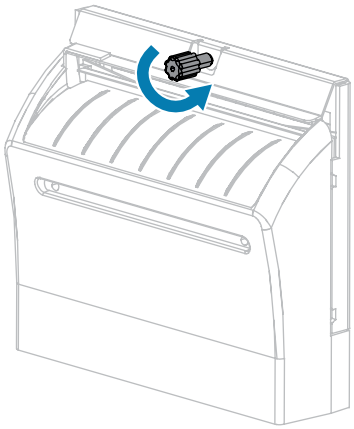

5. Remove the cutter shield.

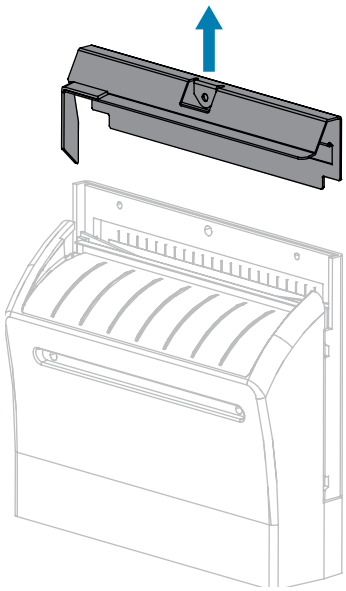

6. If necessary, rotate the cutter motor thumbscrew to fully expose the V-shaped cutter blade (1).

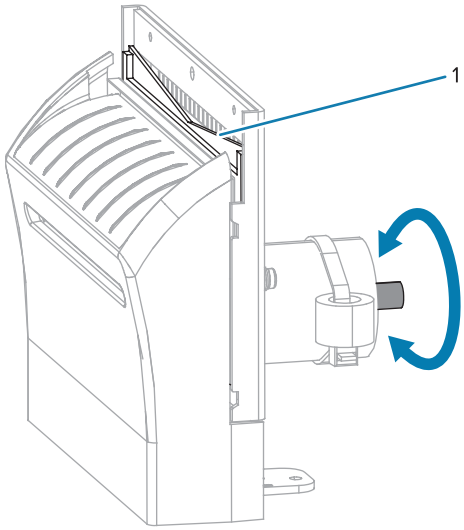


7. Using the swab from the Preventive Maintenance Kit (part number 47362), wipe along the upper cutting surface and the cutter blade. In place of the Preventive Maintenance Kit, you may use a clean swab dipped in 90% isopropyl alcohol. Allow the solvent to evaporate.

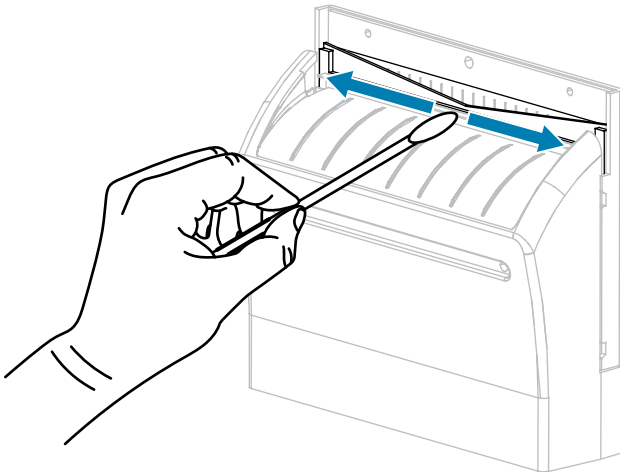

8. When the solvent has evaporated, soak a clean swab in a general-purpose, higher-viscosity silicone or PTFE oil lubricant.

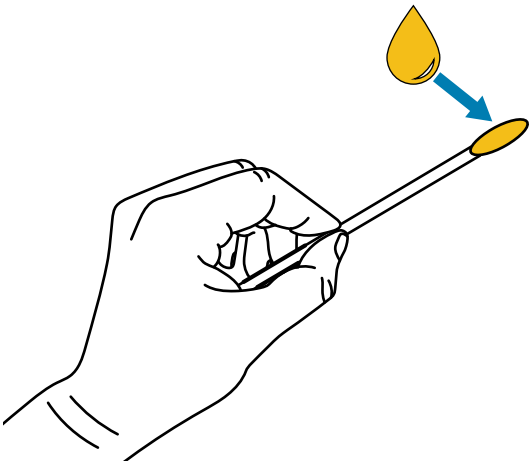

9. Apply an even layer along all exposed surfaces of both cutter blades. Remove any excess oil so that none of it comes in contact with the printhead or platen roller.

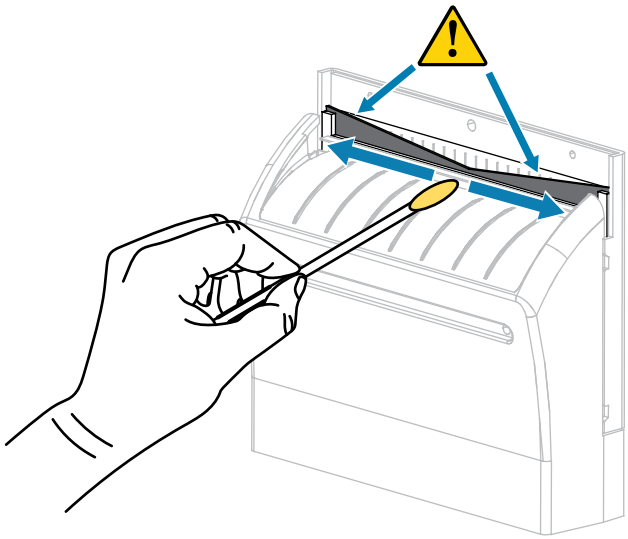

**CAUTION:** The cutter blade is sharp. For operator safety, replace the cutter shield.

10. Replace the cutter shield and secure it with the thumbscrew and lock washer that you removed earlier.

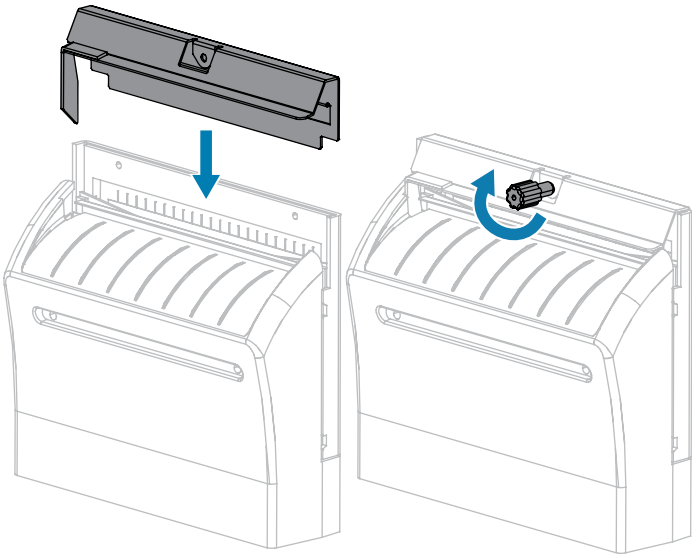

11. Close the media cover.

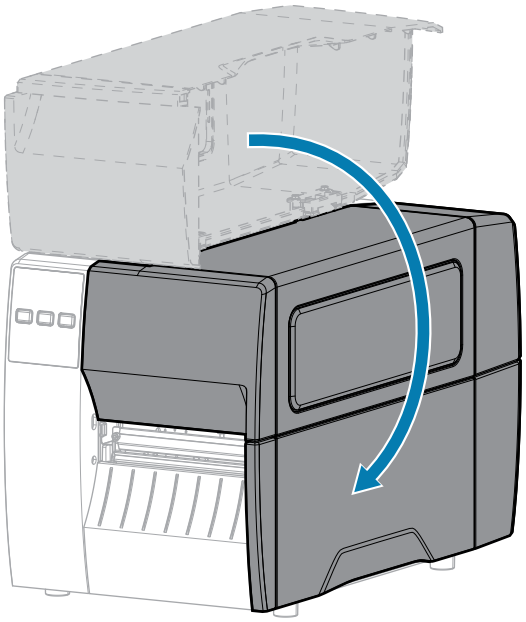

12. Plug the printer into its power source, and then turn on (I) the printer.

    The cutter blade returns to its operating position.

13. If the cutter continues to perform unsatisfactorily, contact an authorized service technician.

## Removing Used Ribbon

Remove used ribbon from the ribbon take-up spindle each time you change the roll of ribbon.

1. Has the ribbon run out?

| If... | Then... |
|---|---|
| Ran out | Continue with the next step. |
| Did not run out | **a.** Cut or break the ribbon before the ribbon take-up spindle.<br> 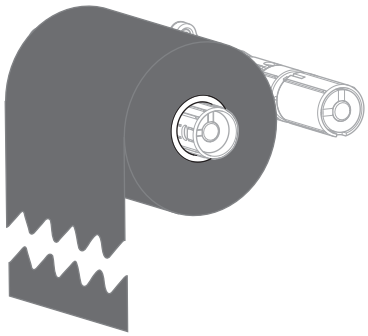 <br>**b.** Continue with the next step. |

2. Slide the core with the used ribbon off of the ribbon take-up spindle.

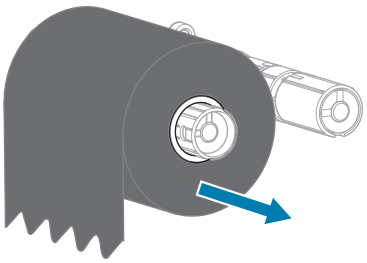

3. Discard the used ribbon. You may reuse the empty core from the ribbon supply spindle by moving it to the ribbon take-up spindle.
4. Reload the ribbon.

# Replacing Printer Components

Some printer components, such as the printhead and platen roller, may wear out over time and can be replaced easily. Regular cleaning may extend the life of some of these components.

For more information on recommended cleaning intervals, see Cleaning Schedule and Procedures on page 86.

## Ordering Replacement Parts

For optimal printing quality and proper printer performance across our product line, Zebra strongly recommends the use of genuine Zebra supplies as part of the total solution. Specifically, the ZT111 printers are designed to work only with genuine Zebra printheads, thus maximizing safety and print quality.

Contact your authorized Zebra reseller for part ordering information.

## Recycling Printer Components

The majority of this printer's components are recyclable. The printer's main logic board may include a battery that you should dispose of properly.

Do not dispose of any printer components in unsorted municipal waste. Please dispose of the battery according to your local regulations, and recycle the other printer components according to your local standards. For more information, see zebra.com/environment.

# Lubrication

The only lubrication needed for this printer is for the cutter module. Follow the instructions in Cleaning and Lubricating the Cutter Module on page 93. Do not lubricate any other parts of the printer.

**CAUTION:** Some commercially available lubricants will damage the finish and the mechanical parts if used on this printer.

# Diagnostics and Troubleshooting

This section provides diagnostic tests and other information that may help you to optimize printing or to troubleshoot issues with your printer.

Go to zebra.com/zt111-info for access to videos and additional online information designed to assist you.

## Evaluating Barcode Quality

Different types of media may require different darkness settings. This section contains a simple but effective method for determining the ideal darkness for printing barcodes that are within specifications.

During the FEED self test, labels are printed at different darkness settings at two different print speeds. The relative darkness and the print speed are printed on each label. The barcodes on these labels may be ANSI-graded to check print quality.

During this test, one set of labels is printed at 2 ips, and another set is printed at 6 ips. The darkness value starts at three settings lower than the printer's current darkness value (relative darkness of –3) and increase until the darkness is three settings higher than the current darkness value (relative darkness of +3).

1. Print a configuration label to show the printer's current settings. (See Configuration Labels on page 104.)
2. Turn off (O) the printer.
3. Press and hold **FEED** while turning on (I) the printer. Hold **FEED** until the first control panel light turns off.

The printer prints a series of labels at various speeds and at darkness settings higher and lower than the darkness value shown on the configuration label.

**Figure 10** FEED Test Label

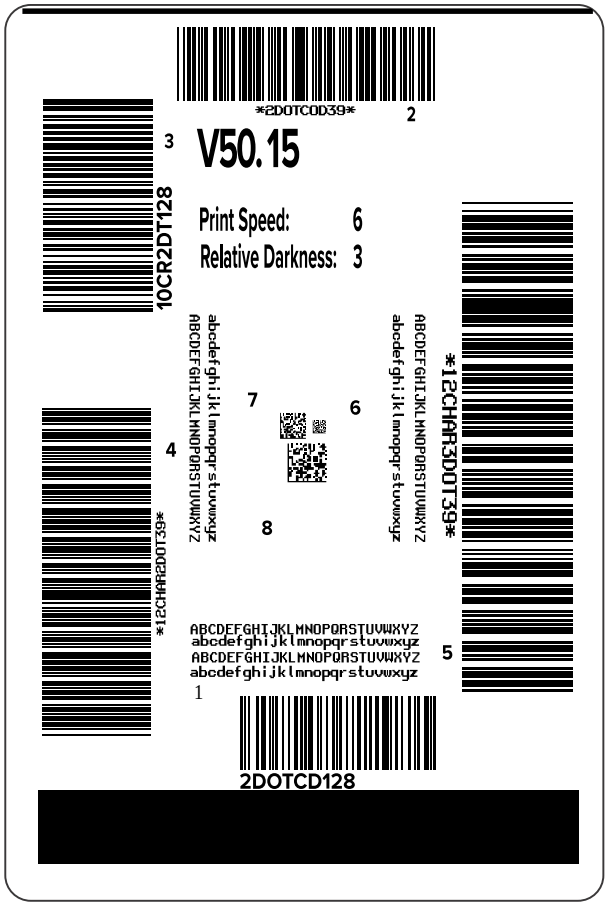


4. Inspect these test labels and determine which one has the optimal print quality for your application. If you have a barcode verifier, use it to measure bars/spaces and calculate the print contrast. If you

do not have a barcode verifier, use your eyes or the system scanner to choose the optimal darkness setting based on the labels printed in this self test.

**Figure 11** Evaluating Barcode Quality

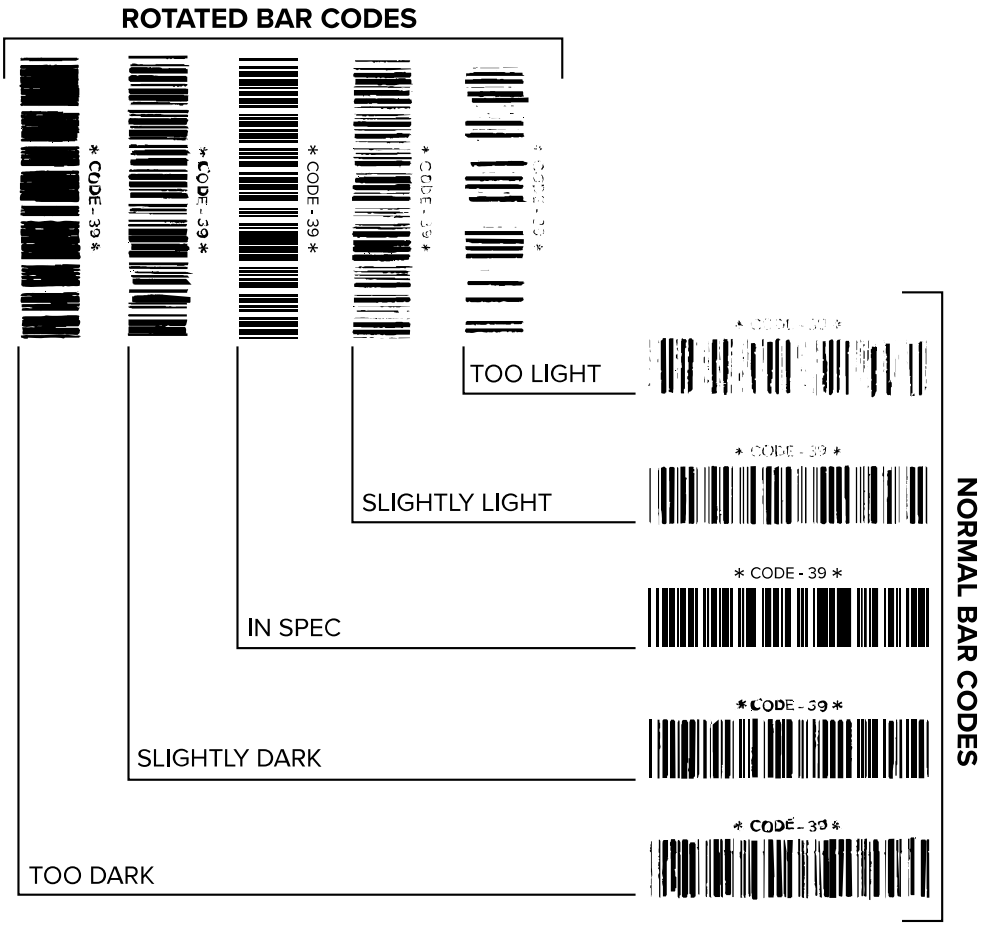


| Appearance | Description |
|---|---|
| Too dark labels | Fairly obvious. These may be readable but are not “in-spec.”<br>• The normal barcode bars increase in size.<br>• The openings in small alphanumeric characters may fill in with ink.<br>• Rotated barcode bars and spaces run together. |
| Slightly dark labels | Not as obvious as the too-dark labels.<br>• The normal barcode will be “in-spec.”<br>• Small alphanumeric characters will be bold, and may appear slightly filled in.<br>• The rotated barcode spaces are small when compared to the “in-spec” code, possibly making the code unreadable. |

| Appearance | Description |
|---|---|
| "In-spec" labels | Whether or not a label is "in-spec" can only be confirmed by a verifier, but they typically exhibit some visible characteristics.<br>• The normal barcode will have complete, even bars along with clear, distinct spaces.<br>• The rotated barcode will have complete, even bars along with clear, distinct spaces. Although it may not look as good as a slightly dark barcode, the barcode will be "in-spec."<br>• In both normal and rotated styles, small alphanumeric characters will look complete. |
| Slightly light labels | In some cases, these are preferred to slightly dark ones for "in-spec" barcodes.<br>• Both normal and rotated barcodes will be "in-spec," but small alphanumeric characters may not be complete. |
| Too light labels | These are obvious.<br>• Both normal and rotated barcodes have incomplete bars and spaces.<br>• Small alphanumeric characters are unreadable. |

5. Note the relative darkness value and the print speed printed on the best test label.
6. Add or subtract the relative darkness value from the darkness value specified on the configuration label. The resulting numeric value is the optimal darkness value for that specific label/ribbon combination and print speed.
7. If necessary, change the darkness value to the darkness value on the selected test label.
8. If necessary, change the print speed to the same speed as on the selected test label.

**See Also**

Print Settings

# Configuration Labels

Two of the most commonly used printer diagnostic items are the printer and network configuration labels. Analyzing the information on these labels can help you to troubleshoot potential issues.

To print these labels, do the following:

1. Turn off (O) the printer.
2. Press and hold **CANCEL** while turning on (I) the printer. Hold **CANCEL** until the first control panel light turns off.

The printer prints a printer configuration label and then a network configuration label as shown in these examples.

**Figure 12** Sample Printer Configuration Label

```
PRINTER CONFIGURATION

Zebra Technologies
ZTC ZTXXX-203dpi ZPL
XXXXXXX-XX-XXXX

10................ LCD CONTRAST
+10............... DARKNESS
2.0 IPS........... PRINT SPEED
+000.............. TEAR OFF
TEAR OFF.......... PRINT MODE
GAP/NOTCH......... MEDIA TYPE
REFLECTIVE........ SENSOR SELECT
832............... PRINT WIDTH
1422.............. LABEL LENGTH
................. PRINT HEAD ID
39.0IN   988MM.... MAXIMUM LENGTH
NOT CONNECTED..... USB COMM.
BIDIRECTIONAL..... PARALLEL COMM.
RS232............. SERIAL COMM.
2400.............. BAUD
8 BITS............ DATA BITS
NONE.............. PARITY
XON/XOFF.......... HOST HANDSHAKE
NONE.............. PROTOCOL
NORMAL MODE....... COMMUNICATIONS
<~>  7EH.......... CONTROL PREFIX
<^>  5EH.......... FORMAT PREFIX
<,>  2CH.......... DELIMITER CHAR
ZPL II............ ZPL MODE
CALIBRATION....... MEDIA POWER UP
CALIBRATION....... HEAD CLOSE
DEFAULT........... BACKFEED
+000.............. LABEL TOP
+0000............. LEFT POSITION
DISABLED.......... REPRINT MODE
020............... WEB SENSOR
024............... MEDIA SENSOR
255............... TAKE LABEL
027............... MARK SENSOR
027............... MARK MED SENSOR
102............... TRANS GAIN
000............... TRANS BASE
100............... TRANS LED
050............... MARK LED
DPCSWFXM.......... MODES ENABLED
................. MODES DISABLED
 832 8/MM FULL.... RESOLUTION
V72.18.1ZP15107 <-. FIRMWARE
1.3............... XML SCHEMA
6.4.1 255......... HARDWARE ID
NONE.............. OPTION BOARD
12288k.........R: RAM
65536k........E: ONBOARD FLASH
NONE.............. FORMAT CONVERT
FW VERSION........ IDLE DISPLAY
07/20/12.......... RTC DATE
02:37............. RTC TIME
DISABLED.......... ZBI
2.1............... ZBI VERSION
READY............. ZBI STATUS
15,110 IN......... NONRESET CNTR
15,110 IN......... RESET CNTR1
15,110 IN......... RESET CNTR2
38,378 CM......... NONRESET CNTR
38,378 CM......... RESET CNTR1
38,378 CM......... RESET CNTR2
FIRMWARE IN THIS PRINTER IS COPYRIGHTED
```

**Figure 13** Sample Network Configuration Label

```
Network Configuration

Zebra Technologies
ZTC ZTXXX-XXXdpi ZPL
XXXXXXXXXXXX

Wired............. PRIMARY NETWORK
PrintServer....... LOAD LAN FROM?
INTERNAL WIRED..... ACTIVE PRINTSRVR

Wired*
ALL............... IP PROTOCOL
192.168.000.017.... IP ADDRESS
255.255.255.000.... SUBNET
192.168.000.254.... GATEWAY
000.000.000.000.... WINS SERVER IP
YES............... TIMEOUT CHECKING
300............... TIMEOUT VALUE
000............... ARP INTERVAL
9100.............. BASE RAW PORT
9200.............. JSON CONFIG PORT

Wireless
ALL............... IP PROTOCOL
000.000.000.000.... IP ADDRESS
255.255.255.000.... SUBNET
000.000.000.000.... GATEWAY
000.000.000.000.... WINS SERVER IP
YES............... TIMEOUT CHECKING
300............... TIMEOUT VALUE
000............... ARP INTERVAL
9100.............. BASE RAW PORT
9200.............. JSON CONFIG PORT
INSERTED.......... CARD INSERTED
02dfH............. CARD MFG ID
9134H............. CARD PRODUCT ID
ac:3f:a4:82:05:9c.. MAC ADDRESS
YES............... DRIVER INSTALLED
INFRASTRUCTURE..... OPERATING MODE
125............... ESSID
1.0............... CURRENT TX RATE
OPEN.............. WEP TYPE
WPA PSK........... WLAN SECURITY
1................. WEP INDEX
000............... POOR SIGNAL
LONG.............. PREAMBLE
NO................ ASSOCIATED
ON................ PULSE ENABLED
15................ PULSE RATE
OFF............... INTL MODE
USA/CANADA........ REGION CODE
USA/CANADA........ COUNTRY CODE
0x7FF............. CHANNEL MASK

Bluetooth
4.3.1p1........... FIRMWARE
02/13/2015........ DATE
on................ DISCOVERABLE
3.0/4.0........... RADIO VERSION
on................ ENABLED
AC:3F:A4:82:05:9D.. MAC ADDRESS
76J162700886...... FRIENDLY NAME
no................ CONNECTED
1................. MIN SECURITY MODE
nc................ CONN SECURITY MODE
supported......... iOS

FIRMWARE IN THIS PRINTER IS COPYRIGHTED
```

## PAUSE Self-Test

This self test can be used to provide the test labels required when making adjustments to the printer's mechanical assemblies or to determine if any printhead elements are not working.

The following shows a sample printout.

**Figure 14** PAUSE Test Label

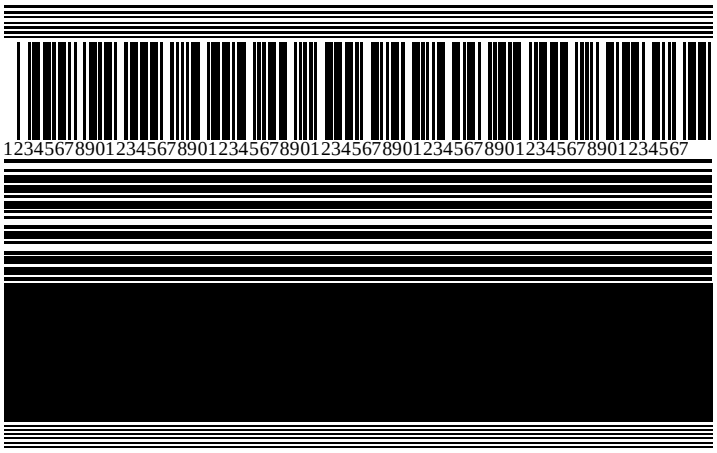


1. Turn off (**O**) the printer.
2. Press and hold **PAUSE** while turning on (**I**) the printer. Hold **PAUSE** until the first control panel light turns off.

   The initial self test prints 15 labels at the printer's slowest speed, and then automatically pauses the printer. Each time **PAUSE** is pressed, an additional 15 labels print.

   While the printer is paused:

   - Pressing **CANCEL** alters the self test. Each time **PAUSE** is pressed, 15 labels print at 152 mm (6 in.) per second.
   - Pressing **CANCEL** again alters the self test a second time. Each time **PAUSE** is pressed, 50 labels print at the printer's slowest speed.
   - Pressing **CANCEL** again alters the self test a third time. Each time **PAUSE** is pressed, 50 labels print at 152 mm (6 in.) per second.
   - Pressing **CANCEL** again alters the self test a fourth time. Each time **PAUSE** is pressed, 15 labels print at the printer's maximum speed.
3. To exit this self test at any time, press and hold **CANCEL**.

## Sensor Profile

Use the ~JG ZPL command to print a sensor profile. The image will extend across several actual labels or tags.

Use the sensor profile image to troubleshoot the following situations:

- The printer experiences difficulty in determining gaps (web) between labels.
- The printer incorrectly identifies preprinted areas on a label as gaps (web).
- The printer cannot detect ribbon.

Compare your results to the examples shown in this section. If the sensitivity of the sensors must be adjusted, calibrate the printer. (See Calibrating the Ribbon and Media Sensors on page 77.)

### Ribbon Sensor Profile

The line labeled RIBBON (1) on the sensor profile indicates the ribbon sensor readings. The ribbon sensor threshold setting is indicated by OUT (2). If the ribbon readings are below the threshold value, the printer does not acknowledge that ribbon is loaded.

**Figure 15** Sensor Profile (Ribbon Section)

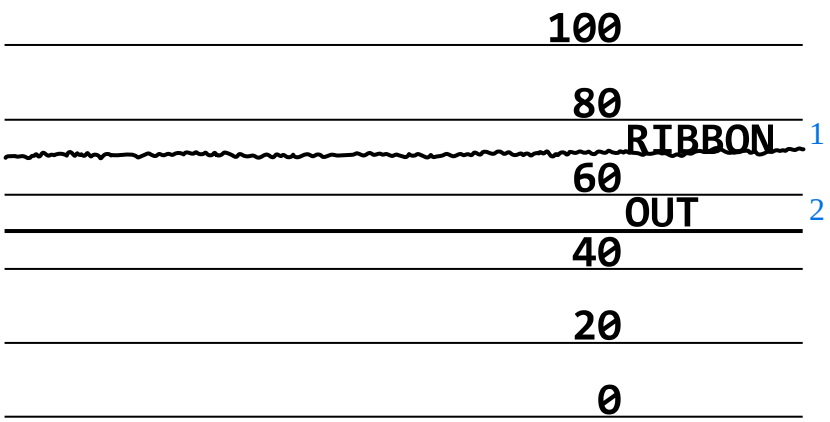


### Media Sensor Profile

The line labeled MEDIA (1) on the sensor profile indicates the media sensor readings. The media sensor threshold settings are indicated by WEB (2). The media out threshold is indicated by OUT (3). The upward or downward spikes (4) indicate divisions between labels (the web, notch, or black mark), and the lines between the spikes (5) indicate where labels are located.

If you compare the sensor profile printout to a length of your media, the spikes should be the same distance apart as the gaps on the media. If the distances are not the same, the printer may be having difficulty determining where the gaps are located.

**Figure 16** Media Sensor Profile (Gap/Notch Media)

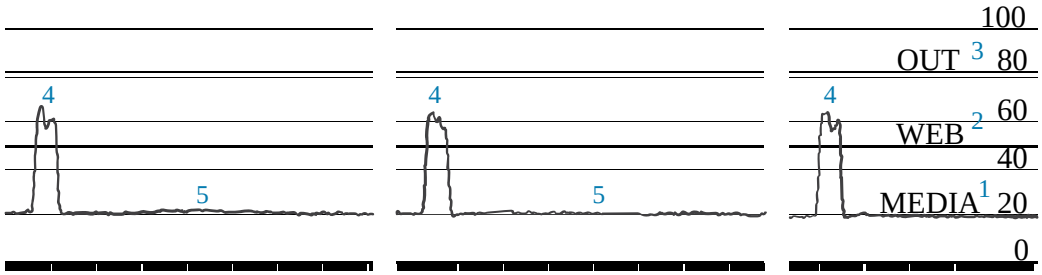


**Figure 17** Media Sensor Profile (Black Mark Media)

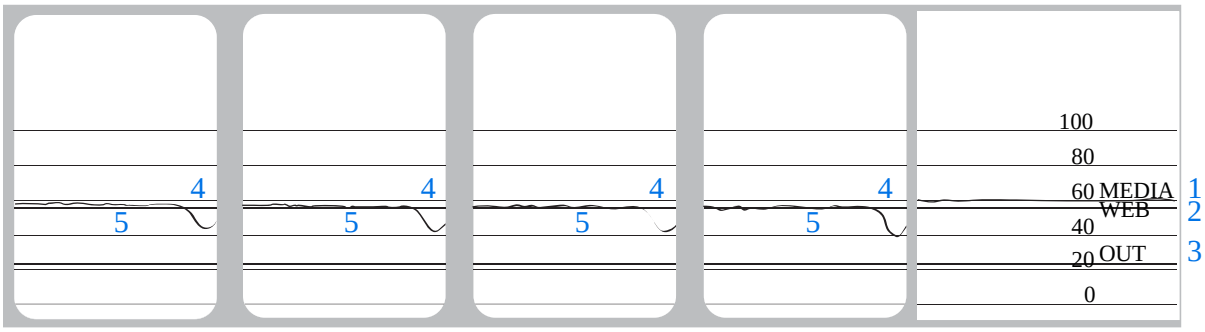


## Communication Diagnostics Test

The communication diagnostics test is a troubleshooting tool for checking the interconnection between the printer and the host computer. When the printer is in diagnostics mode, it prints all data received from the host computer as straight ASCII characters with the hex values below the ASCII text. The printer prints all characters received, including control codes such as CR (carriage return). Here is an example of a typical test label from this test.

**NOTE:** The test label prints upside-down.

**Figure 18** Communications Diagnostics Test Label

```
^FS^FO394,25^AA
5E 46 53 5E 46 4F 33 39 34 2C 32 35 5E 41 41
N,18,10^FD(0000
4E 2C 31 38 2C 31 30 5E 46 44 28 30 30 30 30
)999-9999^FS
29 39 39 39 2D 39 39 39 39 5E 46 53 0D 0A
^FO0,50^AAN,18,
5E 46 4F 30 2C 35 30 5E 41 41 4E 2C 31 38 2C
10^FDCENTER STA
31 30 5E 46 44 43 45 4E 54 45 52 20 53 54 41
```

1. Set the print width equal to or less than the label width being used for the test. See Print Width for more information.
2. Set the **DIAGNOSTICS MODE** option to **ENABLED**. For methods, see Communication Diagnostics Mode.

   The printer enters diagnostics mode and prints any data received from the host computer on a test label.
3. Check the test label for error codes. For any errors, check that your communication parameters are correct.

   Errors show on the test label as follows:

   - FE indicates a framing error.
   - OE indicates an overrun error.
   - PE indicates a parity error.
   - NE indicates noise.
4. Turn the printer off (O) and then back on (I) to exit this self test and return to normal operation.

## Loading Defaults or Last Saved Values

Restoring the printer to default values or to the last saved values can help if things are not working as expected. See Load Defaults for ways to restore these values.

| | |
|---|---|
| **FACTORY** | Restores all printer settings other than the network settings back to the factory defaults. Use care when loading defaults because you will need to reload all settings that you changed manually. |
| **NETWORK** | Reinitializes the printer's wired or wireless print server. With a wireless print server, the printer also reassociates with your wireless network. |
| **LAST SAVED** | Loads settings from the last permanent save. |

# Troubleshooting

Use this information to troubleshoot issues with the printer.

## Indicator Lights

The indicator lights located at the top of the control panel communicate the printer's status.

**Table 12** Status of Printer As Shown by Indicator Lights

| Indicator Lights | What they indicate |
|---|---|
| STATUS PAUSE DATA SUPPLIES NETWORK<br>STATUS light steady green (other lights steady yellow for 2 seconds during printer power-up). | The printer is ready. |
| STATUS PAUSE DATA SUPPLIES NETWORK<br>PAUSE light steady yellow. | The printer is paused. |
| STATUS PAUSE DATA SUPPLIES NETWORK<br>STATUS light steady red.<br>SUPPLIES light steady red. | The media supply is out. The printer needs attention and cannot continue without user intervention. |
| STATUS PAUSE DATA SUPPLIES NETWORK<br>STATUS light steady red.<br>SUPPLIES light flashing red. | The ribbon supply is out. The printer needs attention and cannot continue without user intervention. |
| STATUS PAUSE DATA SUPPLIES NETWORK<br>STATUS light steady yellow.<br>SUPPLIES light flashing yellow. | The printer is in Direct Thermal mode, which does not require ribbon; however, ribbon is installed in the printer. |
| STATUS PAUSE DATA SUPPLIES NETWORK<br>STATUS light steady red.<br>PAUSE light steady yellow. | The printhead is open. The printer needs attention and cannot continue without user intervention. |
| STATUS PAUSE DATA SUPPLIES NETWORK<br>STATUS light steady yellow. | The printhead is over temperature.<br>**CAUTION—HOT SURFACE:** The printhead may be hot and could cause severe burns. Allow the printhead to cool. |

**Table 12** Status of Printer As Shown by Indicator Lights (Continued)

| Indicator Lights | What they indicate |
|---|---|
| STATUS PAUSE DATA SUPPLIES NETWORK<br>STATUS light flashing yellow. | Indicates one of the following:<br>• The printhead is under temperature.<br>• The main logic board (MLB) or power supply is over temperature. |
| STATUS PAUSE DATA SUPPLIES NETWORK<br>STATUS light steady red.<br>PAUSE light steady red.<br>DATA light steady red. | The printhead was replaced with one that is not a genuine Zebra printhead. Install a genuine Zebra printhead to continue. |
| STATUS PAUSE DATA SUPPLIES NETWORK<br>STATUS light flashing red. | The printer is unable to read the dpi setting of the printhead. |
| STATUS PAUSE DATA SUPPLIES NETWORK<br>STATUS light steady red. | This indicates an error with the cutter. The cutter blade is in the media path.<br>**CAUTION:** The cutter blade is sharp. Do not touch or rub the blade with your fingers. |
| Printers with a ZebraNet wired Ethernet option | |
| STATUS PAUSE DATA SUPPLIES NETWORK<br>NETWORK light off. | No Ethernet link is available. |
| STATUS PAUSE DATA SUPPLIES NETWORK<br>NETWORK light steady green. | A 100 Base-T link was found. |
| STATUS PAUSE DATA SUPPLIES NETWORK<br>NETWORK light steady yellow. | A 10 Base-T link was found. |
| STATUS PAUSE DATA SUPPLIES NETWORK<br>NETWORK light steady red. | An Ethernet error condition exists. The printer is not connected to your network. |
| Printers with a ZebraNet wireless option | |

**Table 12** Status of Printer As Shown by Indicator Lights (Continued)

| Indicator Lights | What they indicate |
|---|---|
| 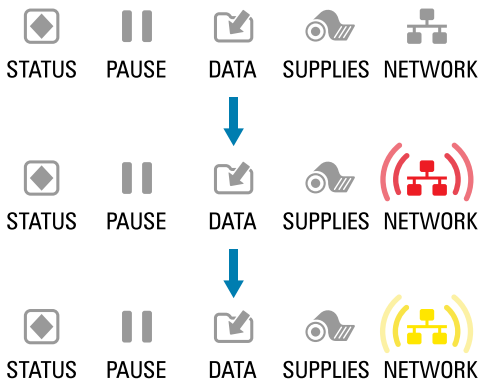 <br>NETWORK light off.<br>The light flashes red while the printer associates with the network.<br>The light then flashes yellow while the printer is authenticating with the network. | A radio was found during power-up. The printer is attempting to associate with the network. |
| <br>NETWORK light steady green. | The radio is associated with your network and authenticated, and the WLAN signal is strong. |
| <br>NETWORK light flashing green. | The radio is associated with your network and authenticated, but the WLAN signal is weak. |
| <br>NETWORK light steady red. | A WLAN error condition exists. The printer is not connected to your network. |

## Printing or Print Quality Issues

| Issue | Possible Cause | Recommended Solution |
|---|---|---|
| The barcode printed on a label does not scan. | The barcode is not within specifications because the printer is set at an incorrect darkness level or the printhead pressure is off. | 1. Print some labels using the Evaluating Barcode Quality on page 100.<br>2. If necessary, manually adjust the darkness or print speed settings.<br>• Set the print darkness to the lowest setting that provides good print quality. If you set the darkness too high, the label image may print unclearly, barcodes may not scan correctly, the ribbon may burn through, or the printhead may wear prematurely.<br>• Slower print speeds typically yield better print quality.<br>For ways to change the darkness and print speed settings, see Print Settings on page 58.<br>3. Set the printhead pressure to the minimum needed for good print quality. See Adjusting the Printhead Pressure on page 81. |
| | There is not enough blank space around the barcode. | Leave at least 3.2 mm (1/8 in.) between the barcode and other printed areas on the label and between the barcode and the edge of the label. |
| My label prints too small (or too large) | The wrong printer driver is being used, or other settings are not correct for your printing application. | Check the printer driver or software communications settings (if applicable) for your connection. You may wish to reinstall the printer driver following the instructions in Connecting the Printer to a Device on page 16. |
| Smudge marks on labels | The media or ribbon is not designed for high-speed operation. | Replace supplies with those recommended for high-speed operation. For more information, see zebra.com/supplies. |
| Poor results with thick labels | Incorrect printhead pressure. | Set the printhead pressure to the minimum needed for good print quality. See Adjusting the Printhead Pressure on page 81. |
| Printing is too light or too dark over the entire label | The media or ribbon is not designed for high-speed operation. | Replace supplies with those recommended for high-speed operation. For more information, see zebra.com/supplies. |

| Issue | Possible Cause | Recommended Solution |
|---|---|---|
| | The printer is set at an incorrect darkness level. | For optimal print quality, set the darkness to the lowest possible setting for your application.<br>1. Print some labels using the Evaluating Barcode Quality on page 100.<br>2. If necessary, manually adjust the darkness or print speed settings.<br>• Set the print darkness to the lowest setting that provides good print quality. If you set the darkness too high, the label image may print unclearly, barcodes may not scan correctly, the ribbon may burn through, or the printhead may wear prematurely.<br>• Slower print speeds typically yield better print quality.<br>For ways to change the darkness and print speed settings, see Print Settings on page 58. |
| | You are using an incorrect combination of media and ribbon for your application. | Switch to a different type of media or ribbon to try to find a compatible combination.<br>If necessary, consult your authorized Zebra reseller or distributor for information and advice. |
| | Incorrect printhead pressure. | Set the printhead pressure to the minimum needed for good print quality. See Adjusting the Printhead Pressure on page 81. |
| Printing is too light or too dark on one side of the label | Uneven printhead pressure. | Adjust the printhead pressure as needed for good print quality. See Adjusting the Printhead Pressure on page 81 |

| Issue | Possible Cause | Recommended Solution |
|---|---|---|
| General print quality issues | The printer is set at an incorrect print speed or darkness level. Keep in mind that printer settings may be affected by the driver or software being used. | For optimal print quality, set the darkness to the lowest possible setting for your application.<br>1. Print some labels using the Evaluating Barcode Quality on page 100.<br>2. If necessary, manually adjust the darkness or print speed settings.<br>• Set the print darkness to the lowest setting that provides good print quality. If you set the darkness too high, the label image may print unclearly, barcodes may not scan correctly, the ribbon may burn through, or the printhead may wear prematurely.<br>• Slower print speeds typically yield better print quality.<br>For ways to change the darkness and print speed settings, see Print Settings on page 58. |
| | You are using an incorrect combination of labels and ribbon for your application. | Switch to a different type of media or ribbon to try to find a compatible combination.<br>If necessary, consult your authorized Zebra reseller or distributor for information and advice. |
| | The printhead is dirty. | Clean the printhead and platen roller. See Cleaning the Printhead and Platen Roller on page 87. |
| | Incorrect or uneven printhead pressure. | Set the printhead pressure to the minimum needed for good print quality. See Adjusting the Printhead Pressure on page 81. |
| | The label format is scaling a font that is not scalable. | Check the label format for font issues. |
| Fine, angular gray lines on blank labels | Wrinkled ribbon. | See wrinkled ribbon causes and solutions in Miscellaneous Issues on page 121. |
| Long tracks of missing print on several labels | Print element damaged. | Call a service technician for assistance. |
| | Wrinkled ribbon. | See wrinkled ribbon causes and solutions in Ribbon Issues on page 116. |

| Issue | Possible Cause | Recommended Solution |
|---|---|---|
| Loss of printing registration on labels<br>Excessive vertical drift in top-of-form registration | The platen roller is dirty. | Clean the printhead and platen roller. See Cleaning the Printhead and Platen Roller on page 87. |
| | Media guides are positioned improperly. | Ensure that the media guides are properly positioned. See Loading the Media on page 34. |
| | The media type is set incorrectly. | Set the printer for the correct media type (gap/notch, continuous, or mark). |
| | The media is loaded incorrectly. | Load media correctly. See Loading the Media on page 34. |
| Misregistration/skips labels | The printer is not calibrated. | Calibrate the printer. See Calibrating the Ribbon and Media Sensors on page 77. |
| | Improper label format. | Check your label format, and correct it as necessary. |
| Misregistration and misprint of one to three labels | The platen roller is dirty. | Clean the printhead and platen roller. See Cleaning the Printhead and Platen Roller on page 87. |
| | Media does not meet specifications. | Use media that meets specifications. See Media Specifications on page 132. |
| Vertical drift in top-of-form position | The printer is out of calibration. | Calibrate the printer. See Calibrating the Ribbon and Media Sensors on page 77. |
| | The platen roller is dirty. | Clean the printhead and platen roller. See Cleaning the Printhead and Platen Roller on page 87. |
| Horizontal movement in placement of the label image. | The previous labels were torn off incorrectly. | Pull down and to the left when tearing off labels so that the tear-off bar assists in tearing through the label backing. Pulling up or down and to the right can shift the media sideways. |
| Vertical image or label drift | The printer is using non-continuous labels but is configured in continuous mode. | Set the printer for the correct media type (gap/notch, continuous, or mark) and calibrate the printer, if necessary. See Calibrating the Ribbon and Media Sensors on page 77. |
| | The media sensor is calibrated improperly. | Calibrate the printer. See Calibrating the Ribbon and Media Sensors on page 77. |
| | The platen roller is dirty. | Clean the printhead and platen roller. See Cleaning the Printhead and Platen Roller on page 87. |
| | Improper printhead pressure settings (toggles). | Adjust the printhead pressure to ensure proper functionality. See Adjusting the Printhead Pressure on page 81. |

| Issue | Possible Cause | Recommended Solution |
|---|---|---|
| | The media or ribbon is loaded incorrectly. | Ensure that the media and ribbon are loaded correctly. See Loading the Ribbon on page 50 and Loading the Media on page 34. |
| | Incompatible media. | You must use media that meets the printer specifications. Ensure that the interlabel gaps or notches are 2 to 4 mm and consistently placed. See Media Specifications on page 132. |

## Ribbon Issues

| Issue | Possible Cause | Recommended Solution |
|---|---|---|
| Broken or melted ribbon | Darkness is set too high. | 1. Print some labels using Evaluating Barcode Quality on page 100.<br>2. If necessary, manually adjust the darkness or print speed settings.<br>• Set the print darkness to the lowest setting that provides good print quality. If you set the darkness too high, the label image may print unclearly, barcodes may not scan correctly, the ribbon may burn through, or the printhead may wear prematurely.<br>• Slower print speeds typically yield better print quality.<br>For ways to change the darkness and print speed settings, see Print Settings on page 58.<br>3. Clean the printhead thoroughly. See Cleaning the Printhead and Platen Roller on page 87. |
| | The ribbon is coated on the wrong side and cannot be used in this printer. | Replace the ribbon with one coated on the correct side. For more information, see Ribbon on page 11. |
| Wrinkled ribbon | Ribbon was loaded incorrectly. | Load the ribbon correctly. See Loading the Ribbon on page 50. |

| Issue | Possible Cause | Recommended Solution |
|---|---|---|
| | Incorrect burn temperature. | 1. Print some labels using the Evaluating Barcode Quality on page 100.<br>2. If necessary, manually adjust the darkness or print speed settings.<br>• Set the print darkness to the lowest setting that provides good print quality. If you set the darkness too high, the label image may print unclearly, barcodes may not scan correctly, the ribbon may burn through, or the printhead may wear prematurely.<br>• Slower print speeds typically yield better print quality.<br>For ways to change the darkness and print speed settings, see Print Settings on page 58. |
| | Incorrect or uneven printhead pressure. | Set the printhead pressure to the minimum needed for good print quality. See Adjusting the Printhead Pressure on page 81. |
| | Media not feeding properly; “walking” from side to side. | Adjust the media guide until it just touches the edge of the media. If this does not solve the issue, check the printhead pressure. See Adjusting the Printhead Pressure on page 81.<br>If necessary, call a service technician. |
| | The printhead or platen roller may be installed incorrectly. | Verify, if you can, that they are installed correctly. If necessary, call a service technician. |
| The printer does not detect when the ribbon runs out. | The printer may have been calibrated without ribbon or without the ribbon loaded properly. | 1. Make sure that ribbon is loaded correctly so that it can be detected by the ribbon sensor. Under the printhead, the ribbon should track all the way back, near the printer’s firewall. See Loading the Ribbon on page 50.<br>2. Calibrate the printer. See Calibrating the Ribbon and Media Sensors on page 77. |
| In thermal transfer mode, the printer did not detect the ribbon even though it is loaded correctly. | | |
| The printer indicates that ribbon is out, even though the ribbon is loaded correctly. | The printer was not calibrated for the label and ribbon being used. | Calibrate the printer. See Calibrating the Ribbon and Media Sensors on page 77. |

## Printer Connectivity Issues

| Issue | Possible Cause | Recommended Solution |
|---|---|---|
| My printer reassigns a new IP address to the print server after the printer has been off for a while. | The settings for your network are causing the network to reassign a new IP address. | If the changing IP addresses cause issues for you, follow these steps to assign a static IP address to the printer:<br>**1.** Find out what values need to be assigned to the IP address, subnet mask, and gateway for your print server (wired, wireless, or both).<br>**2.** Change the appropriate IP protocol value to PERMANENT.<br>**3.** Change the values for the IP address, subnet mask, and gateway for the appropriate print server to what you want them to remain.<br>**4.** Reset the network using Reset Network to save the changes. |
| My printer does not obtain an IP address while trying to connect via LAN/ Ethernet. | The cable is not plugged in correctly. | Check that both ends of the cable are connected properly. |
| | The printer is not configured correctly (usually for DHCP). | Check the Wired IP Protocol setting. It should match your network environment. |
| I cannot change the wired, wireless, or Bluetooth settings on my printer. | The printer is in Protected Mode, which prevents these settings from being updated without the Protected Mode password. You cannot change these settings through the front panel. | You will need the Protected Mode password to change the settings via JSON commands. For more information, refer to the Zebra Link-OS PrintSecure Printer Administration Guide. |
| | For printers purchased in the EMEA region after August 1, 2025, many connectivity options are disabled by default. | For additional information and a configuration wizard, go to zebra.com/asr. |

| Issue | Possible Cause | Recommended Solution |
|---|---|---|
| I manually entered a wireless IP address, subnet, and gateway on my printer, but it won't connect to my wireless network. Protected Mode is not enabled. | The printer's network must be reset after values are changed. | Reset the network using Reset Network to save the changes. |
| | An ESSID value was not specified. | 1. For a wireless connection, specify the ESSID value that matches the value used by your wireless router using the following Set/Get/Do command:<br>`! U1 setvar "wlan.essid" "value"`<br>where "value" is the ESSID (sometimes called a network SSID) for your router. You can look on the back of your router for a sticker with the router's default information.<br>**NOTE:** If the information has been changed from the default, check with your network administrator for the ESSID value to use.<br>2. Reset the network using Reset Network to save the changes. |
| | The ESSID or another value was incorrect. | 1. Print a network configuration label and verify that your values are correct.<br>2. Make corrections as necessary.<br>3. Reset the network using Reset Network to save the changes. |

## Communication Issues

| Issue | Possible Cause | Recommended Solution |
|---|---|---|
| Label Formats Not Recognized | | |
| A label format was sent to the printer but was not recognized. The DATA light does not flash. | The communication parameters are incorrect. | Check the printer driver or software communications settings (if applicable) for your connection. You may wish to reinstall the printer driver following the instructions in Connecting the Printer to a Device on page 16. |
| A label format was sent to the printer but was not recognized. The DATA light flashes but no printing occurs. | The prefix and delimiter characters set in the printer do not match the ones in the label format. | Verify the prefix and delimiter characters using the following SGD commands. Modify the values if necessary.<br>• `! U1 getvar "zpl.format_prefix"`<br>• `! U1 getvar "zpl.delimiter"` |
| | Incorrect data is being sent to the printer. | Check the communication settings on the computer. Ensure that they match the printer settings. |
| | | If the problem persists, check the label format. |
| | The printer has an emulation active. | Verify that the label format matches the printer settings. |
| Labels Stop Printing Correctly | | |
| A label format was sent to the printer. Several labels print, then the printer skips, misplaces, misses, or distorts the image on the label. | The serial communication settings are incorrect. | Ensure that the flow control settings match. |
| | | Check the communication cable length. See Communication Interface Specifications for requirements. |
| | | Check the printer driver or software communications settings (if applicable). |

## Miscellaneous Issues

| Issue | Possible Cause | Recommended Solution |
|---|---|---|
| The USB Host Port Is Not Acknowledging a USB Device | | |
| The printer is not acknowledging a USB device or is not reading the files on a USB device that is plugged into the USB host port. | The printer currently supports USB drives only up to 1 TB in size. | Use a USB drive that is 1 TB or smaller. |
| | The USB device may require its own external power. | If your USB device requires external power, make sure that it is plugged into a working power supply. |
| Printer Parameters Are Not Set As Expected | | |
| Changes in parameter settings did not take effect.<br>OR<br>Some parameters changed unexpectedly. | A firmware setting or command prevented the ability to change the parameter. | Check your label formats or the settings of the software that you use to send formats to the printer.<br>If necessary, refer to the Programming Guide for ZPL, ZBI, Set-Get-Do, Mirror, and WML or call a service technician. A copy of the manual is available at zebra.com/manuals. |
| | A command in a label format changed the parameter back to the previous setting. | |
| Calibration Issues | | |
| Auto Calibrate failed. | The media or ribbon is loaded incorrectly. | Ensure that the media and ribbon are loaded correctly. See Loading the Ribbon on page 50 and Loading the Media on page 34. |
| | The sensors could not detect the media or ribbon. | Calibrate the printer. See Calibrating the Ribbon and Media Sensors on page 77. |
| | The sensors are dirty or positioned improperly. | Ensure that the sensors are clean and properly positioned. |
| | The media type is set incorrectly. | Set the printer for the correct media type (gap/notch, continuous, or mark). |
| Non-continuous labels are being treated as continuous labels. | The printer was not calibrated for the media being used. | Calibrate the printer. See Calibrating the Ribbon and Media Sensors on page 77. |
| | The printer is configured for continuous media. | Set the printer for the correct media type (gap/notch, continuous, or mark). |
| Printer Locks Up | | |
| All indicator lights are on, and the printer locks up. | Internal electronic or firmware failure. | Power cycle the printer. If the problem persists, call a service technician. |
| The printer locks up while booting up. | Main logic board failure. | |

# Servicing the Printer

If you have a problem using the printer, contact your facility's technical or systems support. If there is a problem with the printer, they will contact the Zebra Global Customer Support Center at zebra.com/support.

Gather the following information before contacting Zebra Global Customer Support:

- Serial number of the unit
- Model number or product name
- Firmware version number

Zebra responds to calls by e-mail, telephone, or fax within the time limits set forth in service agreements. If your problem cannot be solved by Zebra Global Customer Support, you may need to return your equipment for servicing and will be given specific directions.

If you purchased your product from a Zebra business partner, please contact that business partner for support.

## Shipping the Printer

If you must ship the printer:

1. Turn off (**0**) the printer, and disconnect all cables.
2. Remove any media, ribbon, or loose objects from the printer interior.
3. Close the printhead.
4. Carefully pack the printer into the original container or a suitable alternate container to avoid damage during transit.

   A shipping container can be purchased from Zebra if the original packaging has been lost or destroyed.

   **IMPORTANT:** Zebra is not responsible for any damages incurred during shipment if an approved shipping container is not used. Shipping the units improperly can possibly void the warranty.

# Specifications

This section lists general printer specifications, printing specifications, ribbon specifications, and media specifications.

## General Specifications

| | | |
|---|---|---|
| Height* | | 279 mm (11.0 in.) |
| Width | | 239 mm (9.41 in.) |
| Length* | | 432 mm (17 in.) |
| Weight* | | 7.7 kg (17 lb) |
| Temperature | Operating | Thermal Transfer: 5° to 40°C (40° to 105°F)<br>Direct Thermal: 0° to 40°C (32° to 105°F) |
| | Storage | –40° to 60°C (–40° to 140°F) |
| Relative Humidity | Operating | 20% to 85%, non-condensing |
| | Storage | 5% to 85%, non-condensing |
| Memory | | 256 MB SDRAM memory (32 MB user-available)<br>256 MB on-board linear Flash memory (64 MB user available) |

* Base model with media cover closed. Dimensions and weight may vary depending on added options.

## Power Specifications

The following are typical values. Actual values vary from unit to unit and are affected by such things as the options installed and the printer settings.

| | |
|---|---|
| Electrical | 100–240 VAC, 50-60 Hz |
| Power consumption—120 VAC, 60 Hz | |
| Inrush Current | < 40A peak<br>8A RMS (half cycle) |
| Energy Star Off Power (W) | 0.12 |
| Energy Star Sleep Power (W) | 3.43 |

| | |
|---|---|
| Print Power* (W) | 57 |
| Print Power* (VA) | 73 |
| Power consumption—230 VAC, 50 Hz | |
| Inrush Current | < 90A peak<br>15A RMS (half cycle) |
| Energy Star Off Power (W) | 0.27 |
| Energy Star Sleep Power (W) | 3.39 |
| Print Power* (W) | 59 |
| Print Power* (VA) | 68 |

* Printing Pause self-test labels at 6 ips with 4x6-in. or 6.5x4 in. labels, darkness 10, and direct thermal media.

## Power Cord Specifications

Depending on how your printer was ordered, a power cord may or may not be included. If one is not included, or if the one that is included is not suitable for your requirements, consider the following information.

**CAUTION—PRODUCT DAMAGE:** For personnel and equipment safety, always use an approved three-conductor power cord specific to the region or country intended for installation. This cord must use an IEC 320 female connector and the appropriate region-specific, three-conductor grounded plug configuration.

**Figure 19** Power Cord Specifications

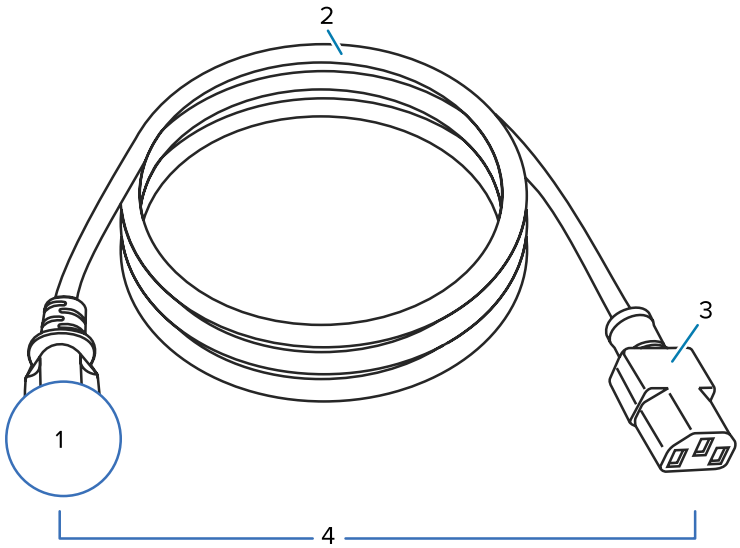


| | |
|---|---|
| 1 | AC power plug for your country—This should bear the certification mark of at least one of the known international safety organizations (see Figure 20 International Safety Organization Certification Symbols on page 126). The chassis ground (earth) must be connected to ensure safety and reduce electromagnetic interference. |
| 2 | 3-conductor HAR cable or other cable approved for your country. |
| 3 | IEC 320 connector—This should bear the certification mark of at least one of the known international safety organizations (see Figure 20 International Safety Organization Certification Symbols on page 126). |
| 4 | Length ≤ 3 m (9.8 ft). Rating 10 Amp, 250 VAC. |

**Figure 20** International Safety Organization Certification Symbols

## Communication Interface Specifications

This section describes standard and optional specifications.

**Figure 21** Location of Communication Interfaces

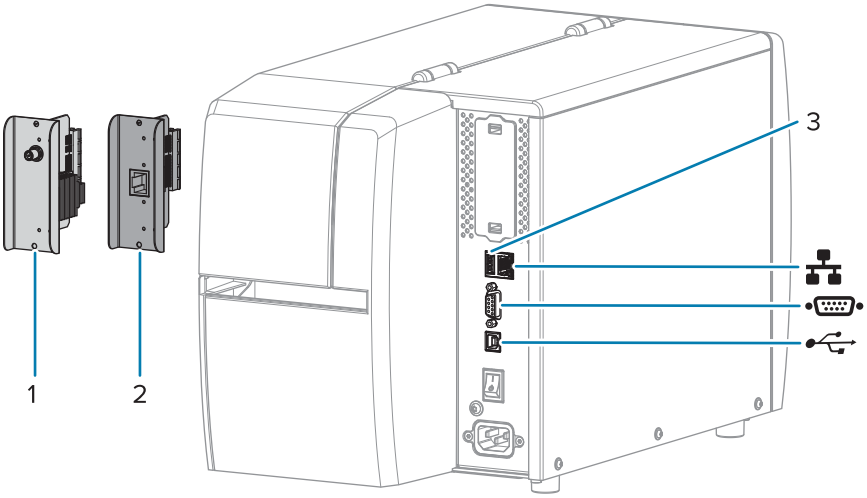


| | |
|---|---|
| 1 | Wireless port option |
| 2 | Wired Ethernet print server (external) |
| 3 | USB host port |
| | Wired Ethernet print server (internal) |
| | Serial port |
| | USB 2.0 data interface |

**NOTE:** You must supply all data cables for your application. The use of cable strain relief clamps is recommended.

Ethernet cables do not require shielding, but all other data cables must be fully shielded and fitted with metal or metalized connector shells. Unshielded data cables may increase radiated emissions above the regulated limits.

To minimize electrical noise pickup in the cable:

- Keep data cables as short as possible.
- Do not bundle the data cables tightly with the power cords.
- Do not tie the data cables to power wire conduits.

## Standard Connections

This printer supports a variety of standard connections.

### USB 2.0 Data Interface

| | |
|---|---|
| Limitations and requirements | A maximum cable length of 5m (16.4 ft). |
| Connections and configuration | No additional configuration is necessary. |

### RS-232/C Serial Data Interface

| | |
|---|---|
| Specifications | • 2400 to 115000 baud<br>• parity, bits/character<br>• 7 or 8 data bit<br>• XON-XOFF, RTS/CTS, or DTR/DSR handshake protocol required<br>• 750mA at 5 V from pins 1 and 9 |
| Limitations and requirements | • You must use a null-modem cable to connect to the printer or a null-modem adapter if using a standard modem cable.<br>• Maximum cable length of 15.24 m (50 ft).<br>• You may need to change printer parameters to match the host computer. |
| Connections and configuration | The baud rate, number of data and stop bits, the parity, and the XON/XOFF or DTR control must match those of the host computer. |

### Wired 10/100 Ethernet Print Server (Internal)

This standard ZebraNet Ethernet option stores network configuration information in the printer. An optional Ethernet connection stores configuration information on a removable print server board, which can be shared between printers.

| | |
|---|---|
| Limitations and requirements | • The printer must be configured to use your LAN.<br>• A second wired print server can be installed in the bottom option slot. |
| Connections and configuration | Refer to the ZebraNet Wired and Wireless Print Servers User Guide for configuration instructions. This manual is available at zebra.com/manuals. |

### Bluetooth Low Energy (BTLE)

| | |
|---|---|
| Limitations and requirements | Many mobile devices can communicate with the printer within a 9.1-m (30-ft) radius of the printer. |

| | |
|---|---|
| Connections and configuration | Refer to the Zebra Bluetooth User Guide for specific instructions for configuring your printer to use a Bluetooth interface. This manual is available at zebra.com/manuals. |

### USB Host Port

| | |
|---|---|
| Limitations and requirements | You can plug only one device into the USB host port. You cannot use a second device by plugging it into a USB port on another device, nor can you use an adapter to split a USB host port on the printer to accept more than one device at a time. |
| Connections and configuration | No additional configuration is necessary. |

## Optional Connections

This printer supports the following connectivity options.

### Wireless Print Server

| | |
|---|---|
| Specifications | See Wireless Specifications for details. |
| Limitations and requirements | • Can print to the printer from any computer on your Wireless Local Area Network (WLAN).<br>• Can communicate with the printer through the printer's web pages.<br>• The printer must be configured to use your WLAN.<br>• Can be installed only in the top option slot. |
| Connections and configuration | Refer to the ZebraNet Wired and Wireless Print Servers User Guide for configuration instructions. A copy of this manual is available at zebra.com/manuals. |

### Wired 10/100 Ethernet Print Server (External)

This ZebraNet Ethernet option allows you to program network configuration information to the print server, which can be shared between printers. The standard Ethernet connection stores configuration information on the printer itself.

| | |
|---|---|
| Requirements | Must have the parallel data interface option. |

## Wireless Specifications

**NOTE:** For printers purchased in the EMEA region after August 1, 2025, WLAN is disabled by default. To enable the WLAN option, refer to the Zebra Link-OS PrintSecure Printer Administration Guide.

### Antenna Information

- Type = trace antenna gain –3.7dBi
- Type = Omni directional antenna gain 3dBi @ 2.4GHz; 5dBi @ 5GHz

### Wireless and Bluetooth Specifications

| | |
|---|---|
| 802.11 b<br>• 2.4 GHz<br>• DSSS (DBPSK, DQPSK, and CCK)<br>• RF power 17.77 dBm (EIRP) | 802.11 a/n<br>• 5.15-5.25 GHz, 5.25-5.35 GHz, 5.47-5.725 GHz<br>• OFDM (16-QAM and 64-QAM with BPSK and QPSK)<br>• RF power 17.89 dBm (EIRP) |
| 802.11 g<br>• 2.4 GHz<br>• OFDM (16-QAM and 64-QAM with BPSK, and QPSK)<br>• RF power 18.61 dBm (EIRP) | 802.11 ac<br>• 5.15-5.25 GHz, 5.25-5.35 GHz, 5.47-5.725 GHz<br>• OFDM (16-QAM and 64-QAM with BPSK and QPSK)<br>• RF power 13.39 dBm (EIRP) |
| 802.11 n<br>• 2.4 GHz<br>• OFDM (16-QAM and 64-QAM with BPSK, and QPSK)<br>• RF power 18.62 dBm (EIRP) | Bluetooth Low Energy (LE)<br>• 2.4 GHz<br>• GFSK (Bluetooth Low Energy)<br>• RF power 2.1 dBm |

## Print Specifications

| | | |
|---|---|---|
| Print resolution | | 203 dpi (dots per inch) (8 dots/mm) |
| | | 300 dpi (12 dots/mm) |
| Programmable constant print speeds (per second) | 203 dpi | 51 mm to 254 mm in 25.4-mm increments<br>2.0 in. to 10 in. in 1-in. increments |
| | 300 dpi | 51 mm to 152 mm in 25.4-mm increments<br>2.0 in. to 6 in. in 1-in. increments |
| Dot size (nominal)<br>(width x length) | 203 dpi | 0.125 mm x 0.125 mm<br>(0.0049 in. x 0.0049 in.) |
| | 300 dpi | 0.084 mm x 0.099 mm<br>(0.0033 in. x 0.0039 in.) |
| Maximum print width | | 104 mm (4.09 in.) |
| Maximum continuous print length* | 203 dpi | 3988 mm (157 in.) |
| | 300 dpi | 1854 mm (73 in.) |
| Barcode modulus (X) dimension | 203 dpi | 5 mil to 50 mil |
| | 300 dpi | 3.3 mill to 33 mil |
| First dot location (measured from the inside edge of the media) | | 2.5 mm ± 1.016 mm<br>(0.10 in. ± 0.04 in. ) |
| Media registration tolerance** | Vertical | ± 1 mm (± 0.039 in.) on non-continuous media |
| | Horizontal | ± 1 mm (± 0.039 in.) within a roll of media |

* Maximum label lengths are affected by option selections and firmware overhead.

** Media registration and minimum label length are affected by media type and width, ribbon type, and print speed. Performance improves as these factors are optimized. Zebra recommends always qualifying any application with thorough testing.

## Media Specifications

| | | |
|---|---|---|
| Label length* | Minimum* (Tear-Off) | 17.8 mm (0.7 in.) |
| | Minimum* (Peel-Off) | 12.7 mm (0.5 in) |
| | Minimum* (Cutter) | 25.4 mm (1.0 in.) |
| | Maximum** (most options) | 991 mm (39 in.) |
| | Maximum (Cutter catch tray) | 152 mm (6 in.) |
| Media width (label and liner) | Minimum | 19 mm (0.75 in.) |
| | Maximum | 114 mm (4.5 in.) |
| Total thickness (includes liner, if any) | Minimum | 0.076 mm (0.003 in.) |
| | Maximum | 0.25 mm (0.010 in.) |
| Maximum roll outside diameter | 76 mm (3-in.) core | 203 mm (8 in.) |
| | 25 mm (1-in.) core | 152 mm (6 in.) |
| Inter-label gap | Minimum | 2 mm (0.079 in.) |
| | Preferred | 3 mm (0.118 in.) |
| | Maximum | 4 mm (0.157 in.) |
| Ticket/tag notch size (width x length) | | 6 mm x 3 mm (0.25 in. x 0.12 in.) |
| Hole diameter | | 3.18 mm (0.125 in.) |
| Notch or hole position (centered from inner media edge) | Minimum | 3.8 mm (0.15 in.) |
| | Maximum | 57 mm (2.25 in.) |
| Density, in Optical Density Units (ODU) (black mark) | | > 1.0 ODU |
| Maximum media density | | ≤ 0.5 ODU |
| Transmissive media sensor | | 11 mm (7/16 in.) from the inside edge |
| Black mark length | | 2.5 to 11.5 mm (0.098 to 0.453 in.) |
| Black mark width | | ≥ 9.5 mm (≥ 0.37 in.) |
| Black mark location (within inside media edge) | | 1 mm (0.04 in.) |
| Black mark density | | > 1.0 Optical Density Units (ODU) |
| Maximum media density | | 0.3 ODU |

* Media registration and minimum label length are affected by media type and width, ribbon type, and print speed. Performance improves as these factors are optimized. Zebra recommends always qualifying any application with thorough testing.

** Maximum label lengths are affected by option selections and firmware overhead.

## Ribbon Specifications

The Thermal Transfer option requires ribbon, which must be coated on the outside. For more information, see Ribbon on page 11.

| | | |
|---|---|---|
| Ribbon width* | Minimum | 40 mm (1.57 in.) |
| | Maximum | 110 mm (4.33 in.) |
| Maximum ribbon length | | 450 m (1476 ft) |
| Maximum ribbon roll size | | 81.3 mm (3.2 in.) |
| Ribbon core inside diameter | | 25 mm (1 in.) |

* Zebra recommends using ribbon that is at least as wide as the media to protect the printhead from wear.

# Glossary

A list of terms used in this guide are defined here.

## alphanumeric

Indicating letters, numerals, and characters such as punctuation marks.

## backfeed

When the printer pulls the media and ribbon (if used) backward into the printer so that the beginning of the label to be printed is properly positioned behind the printhead. Backfeed occurs when operating the printer in Tear-Off and Applicator modes.

## barcode

A code by which alphanumeric characters can be represented by a series of adjacent stripes of different widths. Many different code schemes exist, such as the universal product code (UPC) or Code 39.

## black mark media

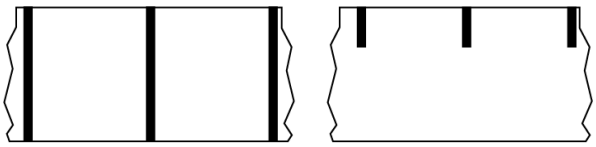

Media with registration marks found on the underside of the print media that act as start-of-label indications for the printer. The reflective media sensor is the generally-selected option for use with black mark media.

Contrast this with continuous media on page 135 or gap/notch media on page 137.

## calibration (of a printer)

## collection method

Select a media collection method that is compatible with your printer options. Selections include tear-off, peel-off, cutter, and rewind. The basic media and ribbon loading instructions are the same for all collection methods with some additional steps necessary for using any media collection options.

## configuration

The printer configuration is a group of operating parameters specific to the printer application. Some parameters are user selectable, while others are dependent on the installed options and mode of operation. Parameters may be switch selectable, control panel programmable, or downloaded as ZPL II commands. A configuration label listing all the current printer parameters may be printed for reference.

## continuous media

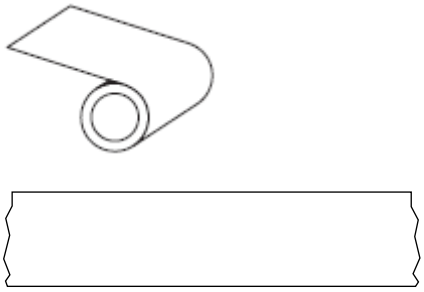

A transmissive (gap) sensor is typically used for the printer to detect when the media runs out.

Contrast this with black mark media on page 134 or gap/notch media on page 137.

## core diameter

The inside diameter of the cardboard core at the center of a roll of media or ribbon.

## diagnostics

Information about which printer functions are not working that is used for troubleshooting printer problems.

## die-cut media

A type of label stock that has individual labels stuck to a media liner. The labels may be lined up against each other or separated by a small distance. Typically the material surrounding the labels has been removed. (See non-continuous media on page 139.)

## direct thermal

A printing method in which the printhead presses directly against the media. Heating the printhead elements causes a discoloration of the heat-sensitive coating on the media. By selectively heating the

printhead elements as the media moves past, an image is printed onto the media. No ribbon is used with this printing method.

Contrast this with thermal transfer on page 142.

## direct thermal media

Media that is coated with a substance that reacts to the application of direct heat from the printhead to produce an image.

## fanfold media

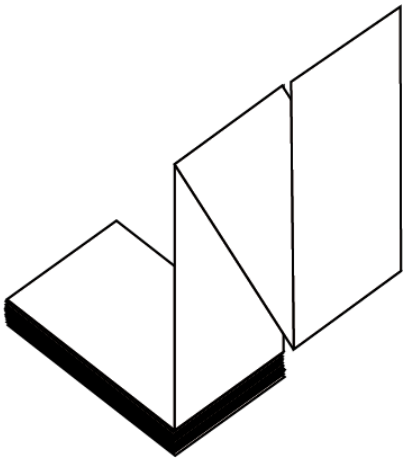

Non-continuous media that comes folded in a rectangular stack and folded in a zigzag pattern. Fanfold media is either gap-notch media or black mark media, meaning it uses black marks or notches to track media format positioning.

Fanfold media can have the same label separations as non-continuous roll media. The separations fall either on or near the folds.

Contrast this with roll media on page 141.

## firmware

This is the term used to specify the printer's operating program. This program is downloaded to the printer from a host computer and stored in flash memory. Each time the printer power is turned on, this operating program starts. This program controls when to feed the media  forward or backward and when to print a dot on the label stock.

## FLASH memory

Non-volatile memory that maintains the stored information intact when power is off. This memory area is used to store the printer's operating program. Can also be used to store optional printer fonts, graphic formats, and complete label formats.

## font

A complete set of alphanumeric characters in one style of type. Examples include CG Times™, CG Triumvirate Bold Condensed™.

## gap/notch media

Media that contains a separation, notch, or hole, indicating where one label/printed format ends and the next begins.

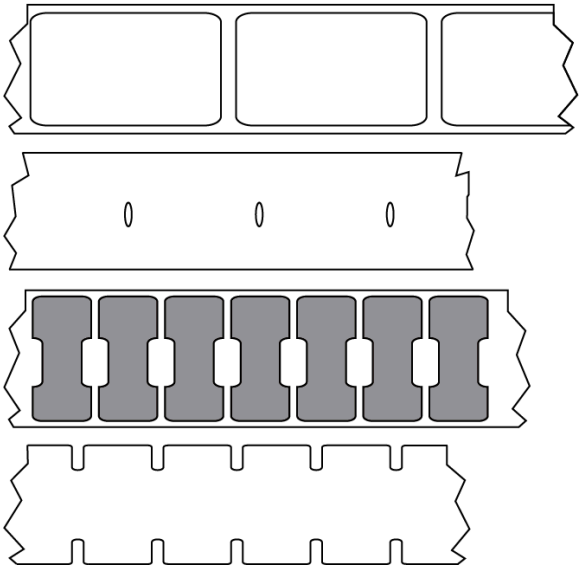

Contrast this with black mark media on page 134 or continuous media on page 135.

## ips (inches-per-second)

The speed at which the label or tag is printed. Many Zebra printers can print from 1 ips to 14 ips.

## label

An adhesive-backed piece of paper, plastic, or other material on which information is printed. A non-continuous label has a defined length, as opposed to a continuous label or a receipt which can have a varying length.

## label backing (liner)

The material on which labels are affixed during manufacture and which is discarded or recycled.

## label type

The printer recognizes the following label types.

Continuous

Gap/Notch

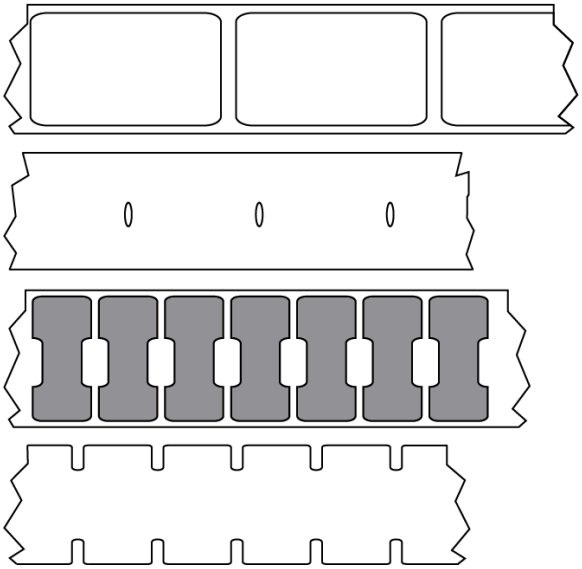

Mark

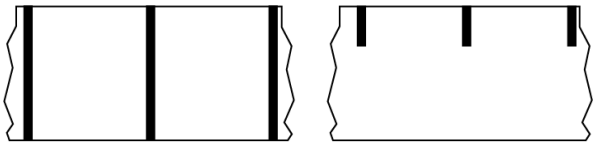

## LCD (liquid crystal display)

A backlit display that provides the user with either operating status during normal operation or option menus when configuring the printer to a specific application.

## LED (light emitting diode)

Indicators of specific printer status conditions. Each LED is either off, on, or blinking depending on the feature being monitored.

## linerless media

Linerless media does not use backing to keep the layers of labels on a roll from sticking to one another. It is wound like a roll of tape, with the sticky side of one layer in contact with the non-sticky surface of the one below it.

Depending on the printer, individual labels may be separated by perforations, or they can be cut apart with a linerless cutter. Because there is no liner, more labels can potentially fit on a roll, cutting down the need to change media as often.

Linerless media is considered an environmentally friendly option because no backing is wasted, and the cost per label can be less than that of standard labels.

Zebra recommends using Zebra ZeroLiner direct thermal linerless media.

## mark media

See black mark media on page 134.

## media

Material onto which data is printed by the printer. Types of media include: tag stock, die-cut labels, continuous labels (with and without media liner), non-continuous media, fanfold media, and roll media.

## media sensor

This sensor is located behind the printhead to detect the presence of media and, for non-continuous media, the position of the web, hole, or notch used to indicate the start of each label.

## media supply hangar

The stationary arm that supports the media roll.

## non-continuous media

Media that contains an indication of where one label/printed format ends and the next one begins. Types of non-continuous media include gap-notch media and black mark media. (Contrast this with continuous media.)

Non-continuous roll media usually comes in the form of labels with an adhesive backing on a liner. Tags (or tickets) are separated by perforations.

Individual labels or tags are tracked and position-controlled using one of these methods:

- Web media separates labels by gaps, holes, or notches.

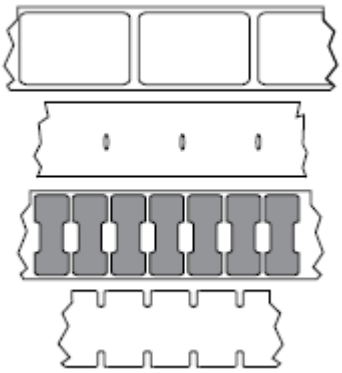

- Black mark media uses pre-printed black marks on the back side of the media to indicate label separations.

- Perforated media has holes—to allow the labels or tags to be separated from each other easily—along with position-control marks, notches, or label gaps.

## non-volatile memory

Electronic memory that retains data even when the power to the printer is turned off.

## notched media

A type of tag stock containing a cutout area that can be sensed as a start-of-label indicator by the printer. This is typically a heavier, cardboard-like material that is either cut or torn away from the next tag. See gap/notch media on page 137.

## peel-off mode

A mode of operation in which the printer peels a printed label away from the backing and allows the user to remove it before another label is printed. Printing pauses until the label is removed.

## perforated media

Media with perforations that allow the labels or tags to be separated from each other easily. The media may also have black marks or other separations between labels or tags.

## print speed

The speed at which printing occurs. For thermal transfer printers, this speed is expressed in terms of inches per second (ips).

## print type

The print type specifies whether the type of media being used requires ribbon to print. Thermal transfer media requires ribbon while direct thermal media does not.

## printhead wear

## Radio frequency identification (RFID) "smart" media

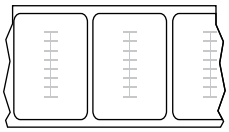

Each RFID label has an RFID transponder (sometimes called an "inlay"), made of a chip and an antenna, embedded between the label and the liner. The shape of the transponder varies by manufacturer and is visible through the label. All "smart" labels have memory that can be read, and many have memory that can be encoded.

RFID media can be used in a printer that is equipped with an RFID reader/encoder. RFID labels are made from the same materials and adhesives as non-RFID labels.

## receipt

A receipt is a variable length printout. One example of a receipt is in retail stores, where each purchased item occupies a separate line on the printout. Therefore, the more items purchased, the longer the receipt.

## registration

Alignment of printing with respect to the top (vertical) or sides (horizontal) of a label or tag.

## ribbon

Ribbon is a thin film that is coated on one side with wax, resin, or wax resin (usually called ink), which is transferred to the media during the thermal transfer process. Ink is transferred onto the media when heated by the small elements within the printhead.

Ribbon is only used with the thermal transfer print method. Direct thermal media does not use ribbon. When ribbon is used, it must be as wide as or wider than the media being used. If the ribbon is narrower than the media, areas of the printhead are unprotected and subject to premature wear. Zebra ribbons have a coating on the back that protects the printhead from wear.

## ribbon wrinkle

A wrinkling of the ribbon caused by improper alignment or improper printhead pressure. This wrinkle can cause voids in the print and/or the used ribbon to rewind unevenly. This condition should be corrected by performing adjustment procedures.

## roll media

Media that comes supplied rolled onto a core (usually cardboard). It can be continuous (no separations between labels)

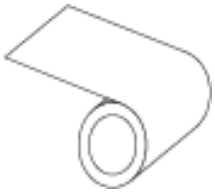

or non-continuous (some type of separation between labels).

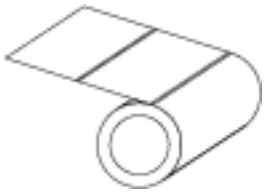

Contrast this with fanfold media on page 136.

## supplies

A general term for media and ribbon.

## symbology

The term generally used when referring to a barcode.

## tag stock

A type of media having no adhesive backing but featuring a hole or notch by which the tag can be hung on something. Tags are usually made of cardboard or other durable material and are typically perforated between tags. Tag stock can come on rolls or in a fanfold stack. (See gap/notch media on page 137.)

## tear-off mode

A mode of operation in which the user tears the label or tag stock away from the remaining media by hand.

## thermal transfer

A printing method in which the printhead presses an ink or resin coated ribbon against the media. Heating the printhead elements causes the ink or resin to transfer onto the media. By selectively heating the printhead elements as the media and ribbon move past, an image is printed onto the media.

Contrast this with direct thermal on page 135.

## void

A space on which printing should have occurred, but did not due to an error condition such as wrinkled ribbon or faulty print elements. A void can cause a printed barcode symbol to be read incorrectly or not at all.