MC2200/MC2700

Mobile Computer

Product Reference Guide

for Android™ 11

ZEBRA

MN-004221-02EN Rev A

Copyright

2023/04/13

ZEBRA and the stylized Zebra head are trademarks of Zebra Technologies Corporation, registered in many jurisdictions worldwide. Google, Android, Google Play and other marks are trademarks of Google LLC. All other trademarks are the property of their respective owners. ©2023 Zebra Technologies Corporation and/or its affiliates. All rights reserved.

Information in this document is subject to change without notice. The software described in this document is furnished under a license agreement or nondisclosure agreement. The software may be used or copied only in accordance with the terms of those agreements.

For further information regarding legal and proprietary statements, please go to:

SOFTWARE: zebra.com/linkoslegal.
COPYRIGHTS: zebra.com/copyright.
PATENTS: ip.zebra.com.
WARRANTY: zebra.com/warranty.
END USER LICENSE AGREEMENT: zebra.com/eula.

Terms of Use

Proprietary Statement

This manual contains proprietary information of Zebra Technologies Corporation and its subsidiaries (“Zebra Technologies”). It is intended solely for the information and use of parties operating and maintaining the equipment described herein. Such proprietary information may not be used, reproduced, or disclosed to any other parties for any other purpose without the express, written permission of Zebra Technologies.

Product Improvements

Continuous improvement of products is a policy of Zebra Technologies. All specifications and designs are subject to change without notice.

Liability Disclaimer

Zebra Technologies takes steps to ensure that its published Engineering specifications and manuals are correct; however, errors do occur. Zebra Technologies reserves the right to correct any such errors and disclaims liability resulting therefrom.

Limitation of Liability

In no event shall Zebra Technologies or anyone else involved in the creation, production, or delivery of the accompanying product (including hardware and software) be liable for any damages whatsoever (including, without limitation, consequential damages including loss of business profits, business interruption, or loss of business information) arising out of the use of, the results of use of, or inability to use such product, even if Zebra Technologies has been advised of the possibility of such damages. Some jurisdictions do not allow the exclusion or limitation of incidental or consequential damages, so the above limitation or exclusion may not apply to you.

Contents

About This Guide **12**
Configurations 12
Mobility DNA Enterprise License 13
Licensed Features 13
Request Licenses 14
Notational Conventions 15
Icon Conventions 15
Service Information 15
Determining Software Versions 16
Determining the Serial Number 16

Getting Started **17**
Unpacking the Device 17
Device Features 18
Setting Up the Device 19
Installing a microSD Card 20
Installing the SIM Card 21
Installing the Battery 22
Removing the Battery 23
Installing/Removing the Trigger Handle 24
Installing the Hand Strap on Device 25
Installing the Hand Strap on Device with Trigger Handle 26
Charging the Main Battery 26

Using the Device **29**

Home Screen 29
Setting Home Screen Rotation 30
Status Bar 31
Notification Icons 31
Status Icons 32
Managing Notifications 35
Opening the Quick Access Panel 35
Quick Access Panel Icons 36
Editing Icons on the Quick Settings Bar 37
Battery Management 38
Checking Battery Status 38
Monitoring Battery Usage 38
Low Battery Notification 39
Interactive Sensor Technology 39
Waking the Device 39
USB Communication 40
Transferring Files 40
Transferring Photos 40
Disconnecting from the Host Computer 40

Settings 42
Accessing Settings 42
Display Settings 42
Setting the Screen Brightness Manually 42
Setting the Screen Brightness Automatically 42
Setting Night Light 43
Setting Screen Timeout 43
Setting Font Size 43
Notification LED Brightness Level 44
Setting Touch Panel Mode 44
Setting the Date and Time 44
General Sound Setting 45
Sound Options 45
Setting Wake-Up Sources 45

Remapping a Button....46
Remappable Keys....46
Keyboards....47
Keyboard Configuration....48
Using the Android and Gboard Keyboards....48
Enterprise Keyboard....49
Language Usage....49
Changing the Language Setting....49
Adding Words to the Dictionary....50
Notifications....50
Setting App Notifications....50
Viewing Notifications....51
Controlling Lock Screen Notifications....51
Enabling Blink Light....52

Applications....53
Installed Applications....53
Accessing Apps....54
Switching Between Recent Apps....54
Battery Manager....55
Opening Battery Manager....55
Battery Manager Information....55
Battery Manager Swap Tab....57
Camera....58
Camera Settings....58
Taking Photos....60
Recording Videos....61
DataWedge Demonstration....62
DataWedge Demonstration Icons....62
Selecting a Scanner....63
PTT Express Voice Client....63
PTT Express User Interface....63
PTT Audible Indicators....64
PTT Notification Icons....64

Enabling PTT Communication....65
Selecting a Talk Group....65
PTT Communication....65
Disabling PTT Communication....66
RxLogger....66
RxLogger Configuration....66
Configuration File....66
Enabling Logging....67
Disabling Logging....67
Extracting Log Files....67
Backing Up Data....67
RxLogger Utility....67

Data Capture....69
Imaging....69
Operational Modes....69
Scanning Considerations....70
Digital Camera....71
Scanning with the Internal Imager....71
Scanning with Internal Camera....72
Scanning with the RS507/RS507X Hands-Free Imager....73
Scanning with the RS5100 Ring Scanner....75
Scanning with the RS6000 Bluetooth Ring Scanner....76
Scanning with the DS3678 Bluetooth Scanner....79
Scanning with the LI3678 Linear Imager....81
Pairing a Bluetooth Ring Scanner....82
Pairing in SSI Mode Using Near Field Communication....82
Pairing in HID Mode Using Near Field Communication....83
Pairing a Bluetooth Scanner....84
Pairing Using Simple Serial Interface....84
Pairing Using Bluetooth Human Interface Device....85
DataWedge....86
Enabling DataWedge....86
Disabling DataWedge....86

Supported Devices 87
Camera Supported Decoders 87
SE4100 Internal Imager Supported Decoders 87
RS507/RS507x Supported Decoders 88
RS5100 Supported Decoders 89
RS6000 Supported Decoders 90
DS3678 Supported Decoders 91
LI3678 Supported Decoders 91

Wireless 93
Wireless Local Area Networks 93
Connecting to a Wi-Fi Network 94
Removing a Wi-Fi Network 94
WLAN Configuration 94
Configuring a Secure Wi-Fi Network 95
Manually Adding a Wi-Fi Network 96
Configuring for a Proxy Server 97
Configuring the Device to Use a Static IP Address 98
Wi-Fi Preferences 98
Additional Wi-Fi Settings 99
Wi-Fi Direct 99
Wireless Wide Area Networks 100
Sharing the Mobile Data Connection 100
Data Usage 102
Cellular Network Settings 103
Bluetooth 105
Adaptive Frequency Hopping 106
Security 106
Bluetooth Profiles 107
Bluetooth Power States 108
Bluetooth Radio Power 108
Discovering Bluetooth Device(s) 108
Changing the Bluetooth Name 109
Connecting to a Bluetooth Device 109

Selecting Profiles on the Bluetooth Device....109
Unpairing a Bluetooth Device....109
Cast....110
Near Field Communications....110
Reading NFC Cards....111
Sharing Information Using NFC....111
Enterprise NFC Settings....112

Accessories....114
Device Accessories....114
Battery Charging....117
Charging the Main Battery....117
Charging the Spare Battery....117
Charging Indicators....118
Charging Temperature....119
1-Slot Charge/USB Cradle....119
1-Slot Charge/Communication Cradle with Spare Battery Charger....120
4-Slot Charge Only ShareCradle with 4-Slot Battery Charger....121
5-Slot Charge Only ShareCradle....122
4-Slot Battery Charger....123
USB-C Cable....124
Connecting the Device to the Host Computer....125
Charging the Device with the USB-C Cable....125
Installing/Removing the Trigger Handle....125
Installing the Trigger Handle Using the Hand Strap Mount....125
Installing the Trigger Handle Using the Battery Finger Scoop....126
Removing the Trigger Handle....126
Installing the Hand Strap on Device....127
Installing the Hand Strap on Device with Trigger Handle....127
Holster....128
Holster for Device....128
Holster for Device with Trigger Handle....130
Rubber Boot....133
Installing the Rubber Boot on the Device....133

Installing the Rubber Boot on Device with a Trigger Handle....134

Application Deployment....135

Secure Certificates....135

Installing a Secure Certificate....135

Configuring Credential Storage Settings....136

Android Development Tools....136

Android Development Workstation....136

Enabling Developer Options....136

EMDK for Android....137

StageNow for Android....137

GMS Restricted....137

ADB USB Setup....138

Enabling USB Debugging....138

Application Installation Methods....139

Installing Applications Using the USB Connection....139

Installing Applications Using the Android Debug Bridge....139

Installing Applications Using Wireless ADB....140

Installing Applications Using a microSD Card....142

Uninstalling an Application....143

Android System Update....143

Performing a System Update Using microSD Card....143

Performing a System Update Using ADB....144

Verifying System Update Installation....145

Android Enterprise Reset....145

Performing an Enterprise Reset From Device Settings....145

Performing an Enterprise Reset Using microSD Card....145

Performing an Enterprise Reset Using ADB....146

Android Factory Reset....147

Performing a Factory Reset Using microSD Card....147

Performing a Factory Reset Using ADB....147

Android Storage....148

Random Access Memory....149

Viewing Memory....149

Internal Storage....149
External Storage....149
Managing Apps....151
App Details....151
Managing Downloads....151

Keypad....152
34-Key Keypad....152
Key and Button Descriptions....152

Maintenance and Troubleshooting....155
Maintaining the Device....155
Battery Safety Guidelines....155
Cleaning Instructions....156
Approved Cleanser Active Ingredients....156
Harmful Ingredients....157
Device Cleaning Instructions....157
Special Cleaning Notes....157
Cleaning Materials Required....157
Cleaning Frequency....157
Cleaning the Device....158
Housing....158
Display....158
Camera and Exit Window....158
Cleaning Battery Connectors....158
Cleaning Cradle Connectors....158
Troubleshooting....159
Resetting the Device....159
Troubleshooting the Device....160

Technical Specifications....166
Data Capture Supported Symbologies....166
Decode Distances....166

1-Slot Charge/USB Cradle Technical Specifications..... 167
1-Slot Charge/Communication Cradle with Spare Battery Charger Technical Specifications..... 168
4-Slot Charge Only ShareCradle with 4-Slot Battery Charger Technical Specifications..... 168
5-Slot Charge Only ShareCradle Technical Specifications..... 169
4-Slot Battery Charger Technical Specifications..... 170
Trigger Handle Technical Specifications..... 170

About This Guide

This guide provides information about setting up and using the MC2200 and MC2700 mobile computers. Some screens shown in this guide may differ from the actual screens shown on the device.

Configurations

The following table covers all WLAN configurations of the device.

Table 1 WLAN Configurations

Part Number	Radios	Camera	Memory	Data Capture Options	Operating System
MC2200J	WLAN: 802.11 a/b/g/n/ac WPAN: Bluetooth v5.0 Low Energy	No	2 GB RAM/16 GB Flash	2D imager (SE4100)	Google™ Mobile Services (GMS) 11 Android-based AOSP 11
MC2200K	WLAN: 802.11 a/b/g/n/ac WPAN: Bluetooth v5.0 Low Energy	13 MP rear	3 GB RAM/32 GB Flash	2D imager (SE4100) and integrated NFC	Google™ Mobile Services (GMS) 11 Android-based AOSP 11

Table 2 WWAN Configurations

Part Number	Radios	Camera	Memory	Data Capture Options	Operating System
MC2700J	WLAN: 802.11 a/b/g/n/ac WPAN: Bluetooth v5.0 Low Energy	No	2 GB RAM/16 GB Flash	2D imager (SE4100)	Google™ Mobile Services (GMS) 11 Android-based AOSP 11
MC2700K	WLAN: 802.11 a/b/g/n/ac WPAN: Bluetooth v5.0 Low Energy	13 MP rear	3 GB RAM/32 GB Flash	2D imager (SE4100) and integrated NFC	Google™ Mobile Services (GMS) 11 Android-based AOSP 11

Mobility DNA Enterprise License

Powerful complimentary Mobility DNA tools are pre-loaded and ready to use, making it easier to stage, secure and troubleshoot devices; capture and send data to your applications right out of the box; restrict access to features and applications; and more. The Mobility DNA Enterprise License delivers premium voice capabilities over Wi-Fi and unlocks a powerful data toolkit that takes workforce productivity and device management simplicity to a new level.

*Optional Zebra voice solutions available for purchase. Push-to-Talk Express and Workforce Connect PTT Pro do not require the MDNA Enterprise license. Workforce Connect Voice and other third party full duplex voice solutions require the MDNA Enterprise license for performance and support.

Licensed Features

The features listed below are only available on this device with the purchase of a Mobility DNA Enterprise License. A single license unlocks all premium features on the device. Some apps may require a download from zebra.com/support. Please contact your administrator or go to zebra.com for more information.

NOTE: Android Multi-User Mode is not supported by the Mobility DNA Enterprise License. Entering Multi-User Mode on a device with an active Mobility DNA Enterprise License may cause undefined behavior.

Core OS, Apps, and mDNA

Core OS, apps, and mDNA features that require the purchase of a Mobility DNA Enterprise License.

- PowerPrecision
- PowerPrecision Console
- Zebra Volume Control
- Secure NFC through EMDK
- Firmware Over the Air (FOTA)
- Device Tracker
- Enterprise Keyboard
- Device Central
- NG SimulScan through EMDK and DataWedge
- WFC Voice

WWAN and Connectivity

WWAN and Connectivity features that require the purchase of a Mobility DNA Enterprise License.

- Fusion Configuration Service Providers (CSPs)
- Bluetooth Silent Pairing
- Bluetooth NFC Tap and Pair
- Bluetooth CSPs
- Disable future pairing with remote Bluetooth devices.
- Do not allow the device to be visible to other devices over Bluetooth.

- Allow Silent Pairing

Fusion

Fusion features that require the purchase of a Mobility DNA Enterprise License.

- Prevent disconnect when roaming during sudden loss of access point.
- Prevent disconnect when roaming if infrastructure initiates disconnect.
- Wi-Fi optimization for Voice Over IP (VOIP)
- Remote configuration using a Mobile Device Management (MDM)
- Real-time statistics and WLAN event logging
- 802.11v
- Call Admission Control/TSPEC/Voice Prioritization
- Fusion Configuration Graphical User Interface (GUI)
- Power Management (WMM U-APSD)
- EAP Methods (LEAP)
- EAP Methods (GTC) Dynamic Pwd Fast Roam (CCKM)
- CCXv4
- Channel Mask
- Band Preference
- Traffic Monitor
- Restricted Wi-Fi User Interface
- Subnet Roam
- Auto Time Configuration
- Soft Access Point Regulatory (Channel Selection)
- Disconnect Suppression
- WorryFree Wi-Fi

Request Licenses

Customers, partners, and distributors require a Mobility DNA Enterprise License. Please request an evaluation or trial license through your account manager.

An account manager or sales engineer can request a trial or evaluation of the Mobility DNA Enterprise License for customers, partners, or distributors using SFDC forms.

Zebra engineering can submit a request for a trial or evaluation of the Mobility DNA Enterprise License using Service NOW.

Notational Conventions

The following conventions are used in this document:

- **Bold** text is used to highlight the following:
  - Dialog box, window, and screen names
  - Dropdown list and list box names
  - Checkbox and radio button names
  - Icons on a screen
  - Key names on a keypad
  - Button names on a screen
- Bullets (•) indicate:
  - Action items
  - List of alternatives
  - Lists of required steps that are not necessarily sequential.
- Sequential lists (for example, those that describe step-by-step procedures) appear as numbered lists.

Icon Conventions

The documentation set is designed to give the reader more visual clues. The following visual indicators are used throughout the documentation set.

NOTE: The text here indicates information that is supplemental for the user to know and that is not required to complete a task.

IMPORTANT: The text here indicates information that is important for the user to know.

CAUTION: If the precaution is not heeded, the user could receive a minor or moderate injury.

WARNING: If danger is not avoided, the user CAN be seriously injured or killed.

DANGER: If danger is not avoided, the user WILL be seriously injured or killed.

Service Information

If you have a problem with your equipment, contact Zebra Global Customer Support for your region. Contact information is available at: zebra.com/support.

When contacting support, please have the following information available:

- Serial number of the unit
- Model number or product name
- Software type and version number

Zebra responds to calls by email, telephone, or fax within the time limits set forth in support agreements.

If your problem cannot be solved by Zebra Customer Support, you may need to return your equipment for servicing and will be given specific directions. Zebra is not responsible for any damages incurred during shipment if the approved shipping container is not used. Shipping the units improperly can possibly void the warranty.

If you purchased your Zebra business product from a Zebra business partner, contact that business partner for support.

Determining Software Versions

Before contacting Customer Support, determine the current software version on your device.

1. Swipe down from the Status bar with two fingers to open the Quick Access panel, and then touch ⚙.
2. Touch **About phone**.
3. Scroll to view the following information:
   - Battery information
   - Emergency information
   - SW components
   - Legal information
   - Model & hardware
   - Android version
     - Android security patch level
     - Kernel version
     - Build number

   To determine the device International Mobile Equipment Identity (IMEI) information (WWAN only), touch **About phone** > **IMEI**.

   - **IMEI** - Displays the IMEI number for the device.
   - **IMEI SV** - Displays the IMEI software version (SV) number for the device.

Determining the Serial Number

Before contacting Customer Support, determine the serial number of your device.

1. Touch **About phone**.
2. Touch **Model & hardware**.
3. Touch **Serial number**.

Getting Started

This section provides information to get the device up and running for the first time.

Unpacking the Device

Unpacking the device from the box.

1. Carefully remove all protective material from the device and save the shipping container for later storage and shipping.
2. Verify that the following were received:
   - Mobile computer
   - PowerPrecision Lithium-ion battery
   - Hand strap (installed)
   - Regulatory Guide
3. Inspect the equipment for damage. If any equipment is missing or damaged, contact the Global Customer Support center immediately.
4. Prior to using the device for the first time, remove the protective shipping film that covers the scan window, display, and camera window.

Device Features

This section lists features of the MC2200/MC2700 mobile computer.

Figure 1 Front View

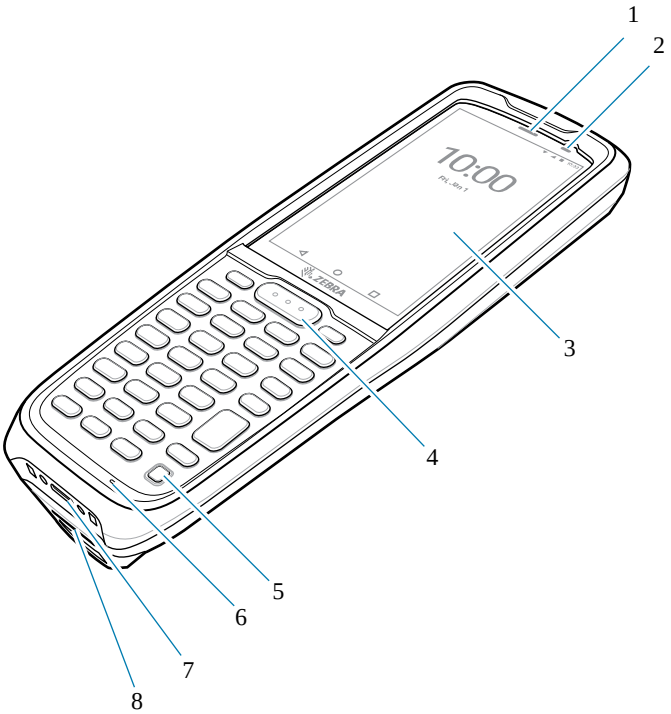

Table 3 Front View Features

Number	Item	Function
1	Scan indicator	Indicates a successful or unsuccessful scan.
2	Charging/Notification LED	Indicates battery charging status while charging and application generated notifications.
3	Touch screen	Displays all information needed to operate the device.
4	Scan button	Initiates data capture when a scan application is enabled.
5	Power button	Turns the display on and off. Press and hold to reset the device or power off.
6	Microphone	Use for communications in Handset mode.
7	USB-C connector/Bottom port	Provides USB host and client communications, and device charging via cables and accessories.
8	Hand strap clip slot	Use for securing the hand strap in place.

Figure 2 Back View

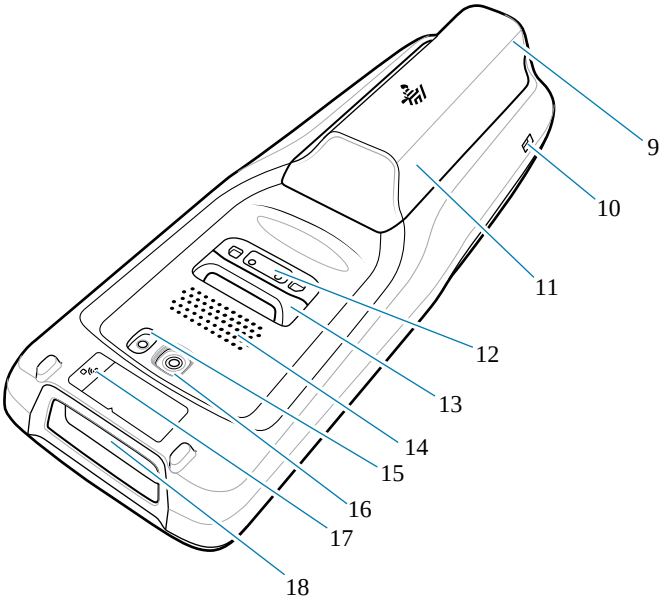

Table 4 Back View Features

Number	Item	Function
9	Battery release button	Press to remove the battery.
10	Alignment feature/Latch recess	Use to help guide the USB-C connector into one of the charging cradles.
11	Battery	Standard - 3500 mAh (typical) / 3300 mAh (minimum) PowerPrecision Lithium-ion Battery. Extended - 4900 mAh (typical) / 4600 mAh (minimum) PowerPrecision Lithium-ion Battery.
12	Back port	The two-pin back I/O is an electrical contact that is activated by the trigger handle.
13	Hand strap mount	Provides mounting point for hand strap accessory.
14	Speaker	Provides audio output for video and music playback.
15	Flash	Provides illumination for the camera.
16	Camera	Takes photos and videos.
17	NFC antenna	Provides communication with other NFC-enabled devices.
18	Exit window	Provides data capture using the imager.

Setting Up the Device

Describes the initial setup of the device.

To start using the device for the first time:

1. Install a micro secure digital (SD) card (optional).

2. Install the battery.
3. Charge the device.
4. Power on the device.

Installing a microSD Card

The microSD card slot provides secondary non-volatile storage. The slot is located under the battery pack. Refer to the documentation provided with the card for more information, and follow the manufacturer's recommendations for use.

CAUTION: Follow proper electrostatic discharge (ESD) precautions to avoid damaging the microSD card. Proper ESD precautions include, but are not limited to, working on an ESD mat and ensuring that the operator is properly grounded.

1. Remove the battery.
2. Slide the microSD card holder to the Open position.

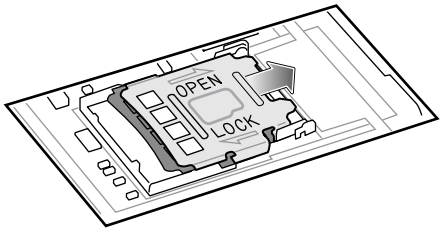

3. Lift the microSD card holder.

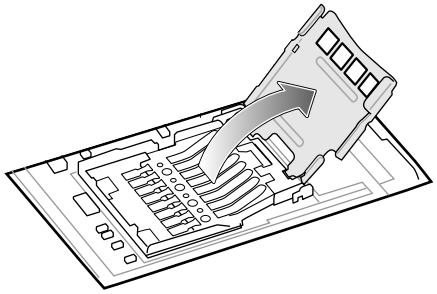

4. Insert the microSD card into the card holder door ensuring that the card slides into the holding tabs on each side of the door.

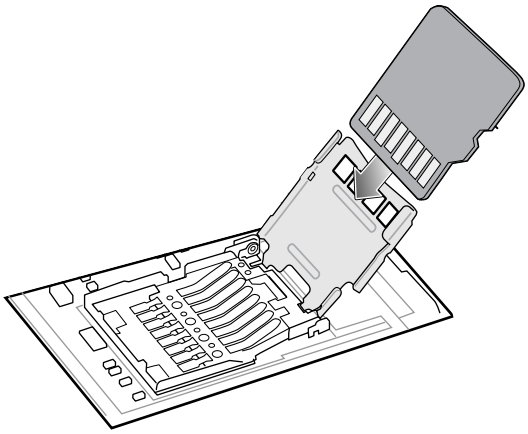

5. Close the microSD card holder and slide into the Lock position.

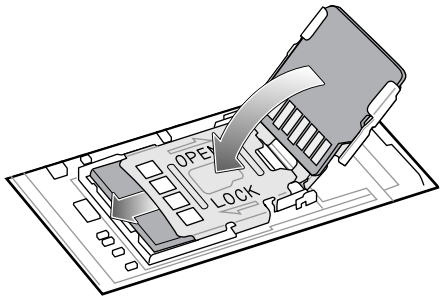

6. Replace the battery.

Installing the SIM Card

NOTE: Only use a nano SIM card. Only applicable to MC2700.

CAUTION: For proper electrostatic discharge (ESD) precautions to avoid damaging the SIM card. Proper ESD precautions include, but not limited to, working on an ESD mat and ensuring that the user is properly grounded.

1. Remove the battery.
2. Slide the SIM card holder to the unlock position.

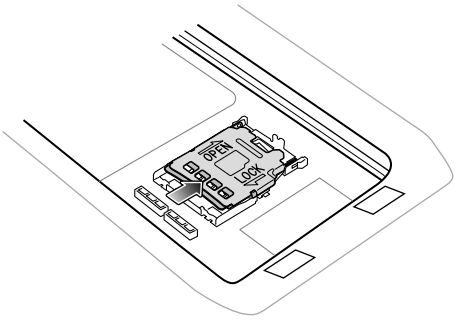

3. Lift the SIM card holder.

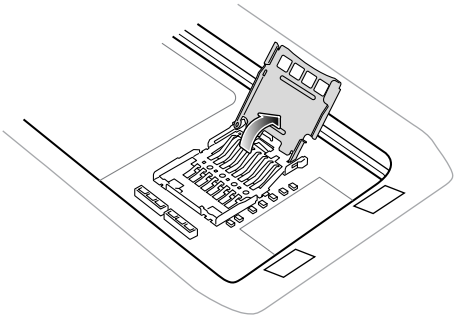

4. Place the nano SIM card into the card holder with the contacts facing down.

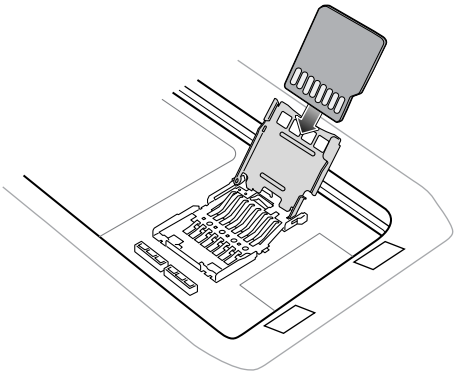

5. Close the SIM card holder door and slide into the lock position.

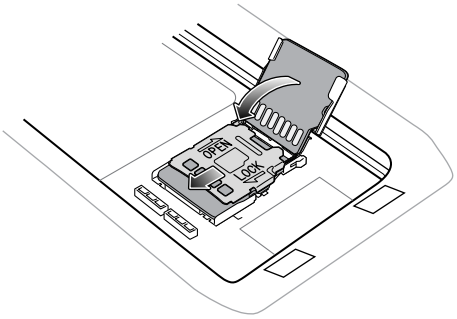

Installing the Battery

This section describes how to install the battery into the MC2200/MC2700 mobile computer.

NOTE: User modification of the device, particularly in the battery well, such as labels, asset tags, engravings, and stickers may compromise the intended performance of the device or accessories. Performance levels such as sealing (Ingress Protection (IP)), impact performance (drop and tumble), functionality, temperature resistance, could be affected. DO NOT put any labels, asset tags, engravings, or stickers in the battery well.

1. Insert the battery, top first, into the battery compartment in the back of the device.

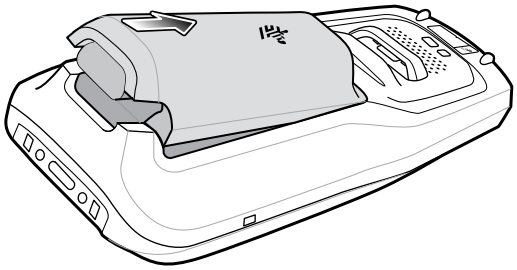

2. Press the bottom of the battery down into the battery compartment until the battery release button snaps into place.

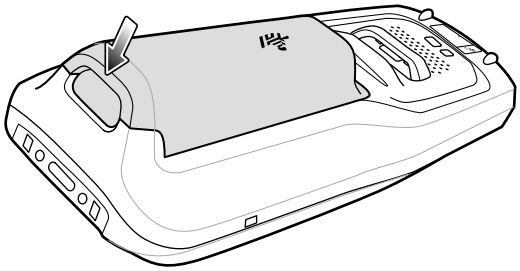

Removing the Battery

Removing the battery from the MC2200/MC2700 mobile computer.

NOTE: Remove the optional trigger handle and/or hand strap prior to battery removal.

1. Holding both the top and bottom of the battery, press the battery release button on the bottom of the battery with your thumb.

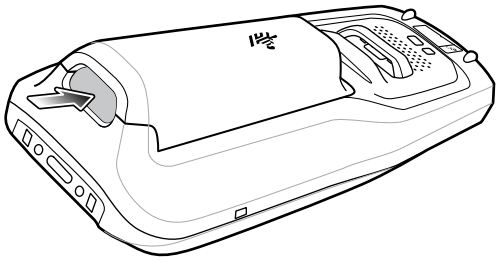

2. Lift the bottom of the battery up and remove it.

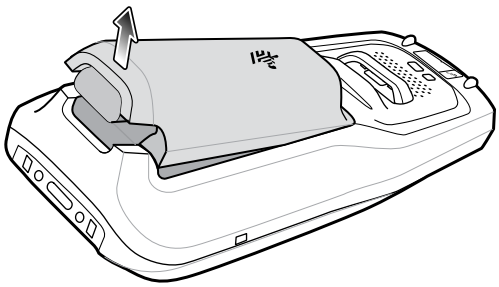

Installing/Removing the Trigger Handle

This section explains installing and removing the trigger handle with a hand strap mount and using a battery finger scoop.

Installing the Trigger Handle Using the Hand Strap Mount

1. Align the hand strap mount on the back of the device with the recess on the trigger handle.

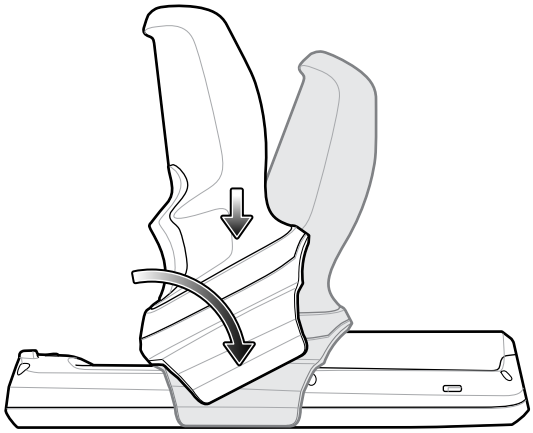

2. Rotate the trigger handle down to grab the device.

Installing the Trigger Handle Using the Battery Finger Scoop

1. Align the battery finger scoop with the recess on the trigger handle.

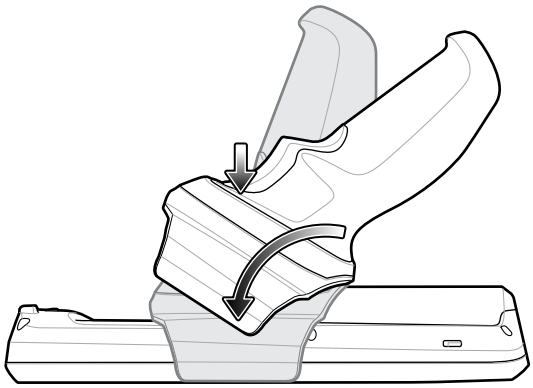

2. Rotate the trigger handle down to grab the device.

Removing the Trigger Handle

- Rotate the trigger handle toward the top of the device and lift up to remove.

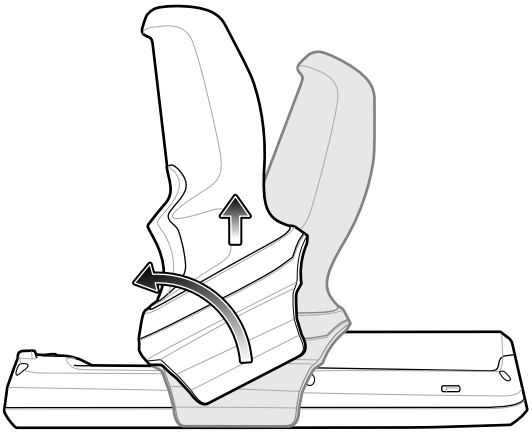

- Alternately, rotate the trigger handle toward the bottom of the device and lift up to remove.

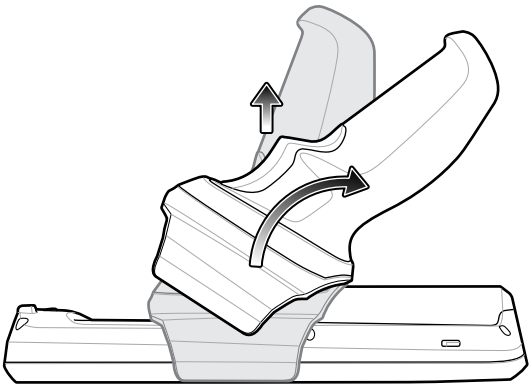

Installing the Hand Strap on Device

1. Insert the hand strap clip into the hand strap clip slot on the bottom of the device.

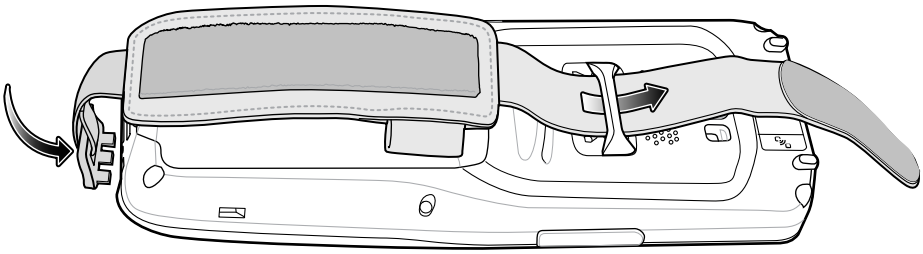

2. Feed the top end of the hand strap through the hand strap mount at the top of the device.

3. Flip the strap over the hand strap mount and attach the end of the strap using the velcro.

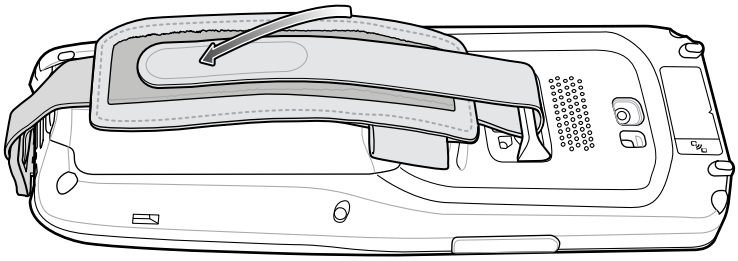

4. Place hand between device and hand strap and adjust hand strap as necessary.

Installing the Hand Strap on Device with Trigger Handle

1. Loop and tie the tether end of the hand strap with the hand strap mount.

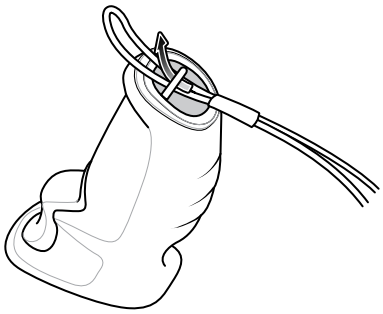

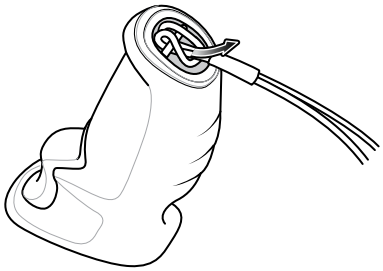

2. Adjust the slide button according to wrist size and place hand between the hand strap.

Charging the Main Battery

To charge the device:

1. Insert the device into a slot to begin charging.
2. Ensure the device is seated properly.

The device's Charging/Notification LED indicates the status of the battery charging in the device. The standard battery charges from fully depleted to 90% in less than three hours. The extended battery charges from fully depleted to 90% in less than three and a half hours.

NOTE: In many cases, the 90% charge provides plenty of charge for daily use. To achieve the fastest charging results, use only Zebra charging accessories and batteries. Charge batteries at room temperature with the device in sleep mode.

Table 5 Charging/Notification LED Charging Indicators

State	Indication
Off	• Device is not charging. • Device is not inserted correctly in the cradle or connected to a power source. • Charger/cradle is not powered.
Slow Blinking Amber (1 blink every 4 seconds)	Device is charging.
Slow Blinking Red (1 blink every 4 seconds)	Device is charging, but the battery is at end of useful life.
Solid Green	Charging complete.
Solid Red	Charging is complete, but the battery is at end of useful life.
Fast Blinking Amber (2 blinks/second)	Charging error, for example: • Temperature is too low or too high. • Charging has gone on too long without completion (typically eight hours).
Fast Blinking Red (2 blinks/second)	Charging error, but the battery is at end of useful life. For example: • Temperature is too low or too high. • Charging has gone on too long without completion (typically eight hours).

Charging Indicators

The charging/notification LED indicates charging status.

Table 6 Charging Indicators

State	Indication
Off	• Device is not charging. • Device is not inserted correctly in the cradle or connected to a power source. • Charger/cradle is not powered.
Slow Blinking Amber (1 blink every 4 seconds)	Device is charging.
Slow Blinking Red (1 blink every 4 seconds)	Device is charging, but the battery is at end of useful life.
Solid Green	Charging complete.
Solid Red	Charging is complete, but the battery is at end of useful life.

Table 6 Charging Indicators (Continued)

State	Indication
Fast Blinking Amber (2 blinks/ second)	Charging error, for example: • Temperature is too low or too high. • Charging has gone on too long without completion (typically 8 hours).
Fast Blinking Red (2 blinks/second)	Charging error, but the battery is at end of useful life. For example: • Temperature is too low or too high. • Charging has gone on too long without completion (typically 8 hours).

Charging Temperature

Charge the batteries in temperatures from 0°C to 40°C (32°F to 104°F). The device or accessory always performs battery charging in a safe and intelligent manner.

At higher temperatures, for example, 37°C (98°F)) the device or accessory may for brief periods of time alternately enable and disable battery charging to keep the battery at acceptable temperatures. The device or accessory indicates when charging is disabled due to abnormal temperatures via its LED and a notification appears on the display.

Using the Device

This section explains how to use your device.

Home Screen

Turn on the device to display the Home screen. Depending on how your system administrator configured your device, your Home screen may appear differently than the graphics in this section.

After the device goes into Sleep mode, the Home screen displays with the lock slider. Touch the screen and slide up to unlock. The Home screen provides four additional screens to place widgets and shortcuts. Swipe the screen left or right to view the additional screens.

NOTE: By default, AOSP devices do not have the same icons on the Home screen as GMS devices. Icons are shown below for example only.

Home screen icons can be configured by the user and may look different than shown.

Figure 3 Home Screen

1	Status bar	Displays the time, status icons (right side), and notification icons (left side).
2	Widgets	Launches stand-alone apps that run on the Home screen.
3	Shortcut icons	Opens apps installed on the device.
4	Folder	Contains apps.
5	Back	Displays the previous screen.
6	Home	Displays the home screen.
7	Recent	Displays recently used applications.

Setting Home Screen Rotation

By default, the Home screen rotation is disabled.

NOTE: Auto-rotate must be enabled in the Quick Access panel or in Settings before the Home Screen Rotation setting can be used.

1. Touch and hold anywhere on the Home screen until the options appear.
2. Touch **Home settings**.
3. Touch the **Allow Home screen rotation** switch.
4. Touch **Home**.

5. Rotate the device.

Status Bar

The Status bar displays the time, notification icons (left side), and status icons (right side).

If there are more notifications than can fit in the Status bar, a dot displays indicating that more notifications exist. Swipe down from the Status bar to open the Notification panel and view all notifications and status.

Figure 4 Notifications and Status Icons

1	Notification icons
2	Status icons

Notification Icons

Notification icons indicate app events and messages.

Table 7 Notification Icons

Icons	Description
	Main battery is low.
	More notifications are available for viewing.
	Data is synching.
	Indicates an upcoming event. GMS devices only.
	Open Wi-Fi network is available.
	Audio is playing.
	Problem with sign-in or sync has occurred.
	Device is uploading data.
	Animated: the device is downloading data. Static: the download is complete.

Table 7 Notification Icons (Continued)

Icons	Description
	Device is connected to or disconnected from a virtual private network (VPN).
	Preparing internal storage by checking it for errors.
	USB debugging is enabled on the device.
	Wired headset with a boom module is connected to the device.
	Indicates the RxLogger app is running.
	Indicates the RxLogger app is running.
	Indicates the Bluetooth scanner is connected to the device.
	Indicates the ring scanner is connected to the device in HID mode.

Status Icons

Status icons display system information for the device.

Table 8 Status Icons

Icon	Description
	Alarm is active.
	Main battery is fully charged.
	Main battery is partially drained.
	Main battery charge is low.
	Main battery charge is very low.
	Main battery is charging.

Table 8 Status Icons (Continued)

Icon	Description
	All sounds, except media and alarms, are muted. Vibrate mode is active.
	All sounds except media and alarms are muted.
	Do Not Disturb mode active.
	Airplane Mode is active. All radios are turned off.
	Bluetooth is on.
	Connected to a Bluetooth device.
	Connected to a Wi-Fi network. Indicates the Wi-Fi version number.
	Not connected to a Wi-Fi network or no Wi-Fi signal.
	Connected to an Ethernet network.
	Speakerphone enabled.
	Portable Wi-Fi hotspot is active (WWAN only).
	Indicates that the Orange key is locked.
A	Indicates that the ALT key is pressed.
C	Indicates that the CTRL key is pressed.
	Indicates that the Shift key is pressed.
	Indicates that the Shift key is locked.
	Indicates that a BT headset is connected to the device.

Table 8 Status Icons (Continued)

Icon	Description
R	Roaming from a network (WWAN only).
	No SIM card installed (WWAN only).
4G LTE	Connected to a 4G LTE/LTE-CA network (WWAN only)[1]
4G	Connected to a DC-HSPA, HSDPA, HSPA+, HSUPA, LTE/LTE-CA or WCMDMA network (WWAN only)[1]
3G	Connected to a 1x-RTT (Sprint), EGDGE, EVDO, EVDV or WCDMA network (WWAN only)[1]
2G	Connected to a GPRS network (WWAN only)[1]
H	Connected to a DC-HSPA, HSDPA, HSPA+, or HSUPA network (WWAN only)[1]
E	Connected to an EDGE network (WWAN only)[1]
G	Connected to a GPRS network (WWAN only)[1]
1X	Connected to a 1x-RTT (Verizon) network (WWAN only)[1]
[1]Cellular network icon that appears is dependent upon the carrier/network.	

Managing Notifications

Notification icons report the arrival of new messages, calendar events, alarms, and ongoing events. When a notification occurs, an icon appears in the Status bar with a brief description.

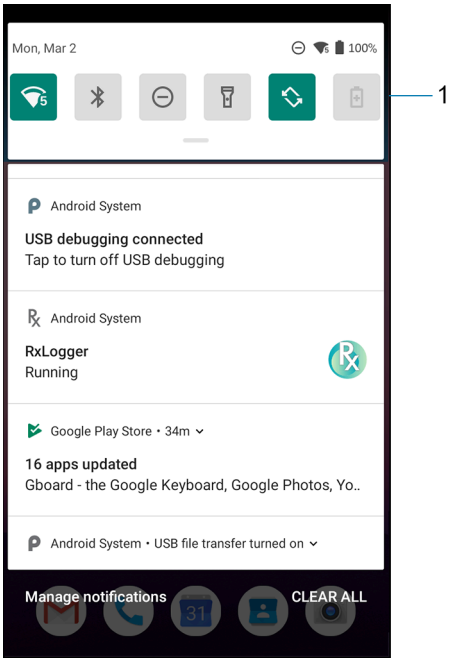

1	Quick settings bar

- To view a list of all notifications, open the Notification panel by dragging the Status bar down from the top of the screen.
- To respond to a notification, open the Notification panel and then touch a notification. The Notification panel closes and the corresponding app opens.
- To manage recent or frequently used notifications, open the Notification panel and then touch Manage notifications. Touch the toggle switch next to an app to turn off all notifications, or touch an app for more notification options.
- To clear all notifications, open the Notification panel and then touch CLEAR ALL. All event-based notifications are removed. Ongoing notifications remain in the list.
- To close the Notification panel, swipe the Notification panel up.

Opening the Quick Access Panel

Use the Quick Access panel to access frequently used settings (for example, Airplane mode).

NOTE: Not all icons are pictured. Icons may vary.

Figure 5 Quick Access Panel

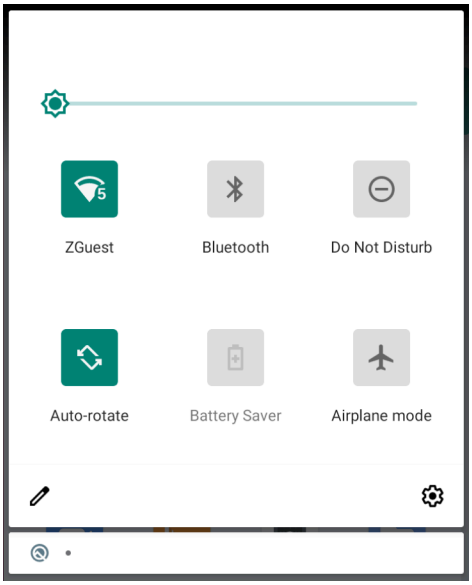

- If the device is locked, swipe down once.
- If the device is unlocked, swipe down once with two fingers, or twice with one finger.
- If the Notification panel is open, swipe down from the Quick Settings bar.

Quick Access Panel Icons

Quick Access panel icons indicate frequently used settings (for example, Airplane mode).

Table 9 Quick Access Panel Icons

Icon	Description
	Display brightness - Use the slider to decrease or increase the brightness of the screen.
	Wi-Fi network - Turn Wi-Fi on or off. To open Wi-Fi settings, touch the Wi-Fi network name.
	Bluetooth settings - Turn Bluetooth on or off. To open Bluetooth settings, touch Bluetooth.
	Battery saver - Turn Battery saver mode on or off. When Battery saver mode is on the performance of the device is reduced to preserve battery power (not applicable).
	Invert colors - Invert the display colors.
	Do not disturb - Control how and when to receive notifications.

Table 9 Quick Access Panel Icons (Continued)

Icon	Description
	Mobile data - Enables or disables data transfer via the WAN. The device is still available for voice calls and texts. To open Mobile data settings, touch and hold (WWAN only).
	Airplane mode - Turn Airplane mode on or off. When Airplane mode is on the device does not connect to Wi-Fi or Bluetooth.
	Auto-rotate - Lock the device's orientation in portrait or landscape mode or set to automatically rotate.
	Flashlight - Turn the flashlight or camera flash on or off. When the flashlight is activated, it stays on unless it is turned off or the camera app is run.
	Location - Enable or disable locationing feature.
	Hotspot - Turn on to share the device's mobile data connection with other devices.
	Data Saver - Turn on to prevent some apps from sending or receiving data in the background.
	Night Light - Tint the screen amber to make it easier to look at the screen in dim light. Set Night Light to turn on automatically from sunset to sunrise, or at other times.
	Screen Cast - Share phone content on Chromecast or a television with Chromecast built-in. On the Cast screen, check the "enable wireless display" option, and then touch "cast screen" to display a list of devices. Touch a device in the list to begin casting.
	Dark Theme - Toggles dark theme on and off. Dark themes reduce the luminance emitted by the screen, while meeting minimum color contrast ratios. It helps improve visual ergonomics by reducing eye strain, adjusting brightness to current lighting conditions, and facilitating screen use in dark environments, while conserving battery power.
	Focus mode - Turn on to pause distracting apps. To open Focus mode settings, touch and hold.
	Bedtime mode - Turn grayscale on and off. Grayscale turns the screen black and white, reducing phone distractions and improving battery life.

Editing Icons on the Quick Settings Bar

The first several setting tiles from the Quick Access panel become the Quick Settings bar.

- Open the Quick Access panel and touch to edit, add, or remove settings tiles.

Battery Management

Observe the recommended battery optimization tips for the device.

- Set the screen to turn off after a short period of inactivity.
- Reduce screen brightness.
- Turn off all wireless radios when not in use.
- Turn off automatic syncing for Email, Calendar, Contacts, and other apps.
- Minimize the use of apps that keep the device from sleeping, for example, music and video apps.

NOTE: Before checking the battery charge level, remove the device from any AC power source (cradle or cable).

Checking Battery Status

Check the battery status through the Battery Information settings, the Battery Manager app, or the quick access panel.

- Open **Settings** and touch **About phone** > **Battery Information**. Or swipe up from the bottom of the screen and touch to open the **Battery Manager** app.

  Battery present status indicates if the battery is present.

  Battery level lists the battery charge (as a percentage of fully charged).
- Swipe down with two fingers from the status bar to open the quick access panel.

  The **battery percentage** is displayed next to the battery icon.

Monitoring Battery Usage

The Battery screen provides battery charge details and power management options to extend battery life. Different apps display different information. Some apps include buttons that open screens with settings to adjust power use. Use the **DISABLE** or **FORCE CLOSE** buttons to turn off apps that consume too much power.

- Go to **Settings**.
- Touch **Battery**.

To display battery information and power management options for a specific app:

- Go to **Settings**.
- Touch **Apps & notifications**.
- Touch an app.
- Touch **Advanced** > **Battery**.

Low Battery Notification

When the battery charge level drops below the change level in the table below, the device displays a notice to connect the device to power. Charge the battery using one of the charging accessories.

Table 10 Low Battery Notification

Charge Level Drops Below	Action
18%	The user should charge the battery soon.
10%	The user must charge the battery.
4%	The device turns off. The user must charge the battery.

Interactive Sensor Technology

To take advantage of these sensors, applications use API commands. Refer to the Google Android Sensor APIs for more information. For information on the Zebra Android EMDK, go to: techdocs.zebra.com.

The device contains sensors that monitor movement, orientation, and ambient light.

- Gyroscope - Measures angular rotational velocity to detect rotation of the device.
- Accelerometer - Measures the linear acceleration of movement to detect the orientation of the device.
- Digital Compass - The digital compass or magnetometer provides simple orientation in relation to the Earth's magnetic field. As a result, the device always knows which way is North so it can auto rotate digital maps depending on the physical orientation of the device.
- Light Sensor - Detects ambient light and adjusts the screen brightness.
- Proximity Sensor - Detects the presence of nearby objects without physical contact. The sensor detects when the device is close to your face during a call and turns off the screen, preventing unintentional screen touches.

Waking the Device

The device goes into Sleep mode when you press **Power** or after a period of inactivity (set in the Display settings window).

1. To wake the device from Sleep mode, press **Power** or the configured wake-up sources.

   The Lock screen displays.

2. Swipe the screen up to unlock.
   - If the Pattern screen unlock feature is enabled, the Pattern screen appears instead of the Lock screen.
   - If the PIN or Password screen unlock feature is enabled, enter the PIN or password after unlocking the screen.

NOTE: If you enter the PIN, password, or pattern incorrectly five times, you must wait 30 seconds before trying again.

- If you forget the PIN, password, or pattern, contact your system administrator.

USB Communication

Connect the device to a host computer to transfer files between the device and the host computer.

When connecting the device to a host computer, follow the host computer's instructions for connecting and disconnecting USB devices, to avoid damaging or corrupting files.

Transferring Files

Use Transfer files to copy files between the device and the host computer.

NOTE: It is recommended to install a microSD card in the device for storing files due to limited internal storage.

1. Connect the device to a host computer using a USB accessory.
2. On the device, pull down the Notification panel and touch **Charging this device via USB**.

   By default, **No data transfer** is selected.
3. Touch **File Transfer**.

NOTE: After changing the setting to **File Transfer**, and then disconnecting the USB cable, the setting reverts back to **No data transfer**. If the USB cable is reconnected, select **File Transfer** again.

4. On the host computer, open **File Explorer**.
5. Locate the **device** as a portable device.
6. Open the **Internal storage** folder.
7. Copy files to and from the device or delete files as required.

Transferring Photos

Use PTP to copy photos from the device to the host computer.

It is recommended to install a microSD card in the device for storing photos due to limited internal storage.

1. Connect the device to a host computer using a USB accessory.
2. On the device, pull down the Notification panel and touch **Charging this device via USB**.
3. Touch **PTP**.
4. Touch **Transfer photos PTP**.
5. On the host computer, open a file explorer application.
6. Open the **Internal storage** folder.
7. Open the SD card or the Internal storage folder.
8. Copy or delete photos as required.

Disconnecting from the Host Computer

NOTE: Carefully follow the host computer's instructions to unmount the microSD card and disconnect USB devices correctly to avoid losing information.

1. On the host computer, unmount the device.

2. Remove the device from the USB accessory.

Settings

This section describes the settings on the device.

Accessing Settings

There are multiple ways to access settings on a device.

- Swipe down with two fingers from the top of the Home screen to open the Quick Access panel and touch ⚙.
- Double-swipe down from the top of the Home screen to open the Quick Access panel and touch ⚙.
- Swipe up from the bottom of the Home screen to open APPS and touch **Settings**.

Display Settings

Use Display settings to change the screen brightness, enable night light, change the background image, enable screen rotation, set screen timeout, and change font size.

Setting the Screen Brightness Manually

Manually set the screen brightness using the touchscreen.

1. Swipe down with two fingers from the Status bar to open the Quick Access panel.
2. Slide the icon to adjust the screen brightness level.

Setting the Screen Brightness Automatically

Automatically adjust the screen brightness using the built-in light sensor.

1. Go to **Settings**.
2. Touch **Display**.
3. If disabled, touch **Adaptive brightness** to automatically adjust the brightness.

   By default, **Adaptive brightness** is enabled. Toggle the switch to disable.

Setting Night Light

The Night Light setting tints the screen amber, making the screen easier to look at in low light.

1. Go to **Settings**.
2. Touch **Display**.
3. Touch **Night Light**.
4. Touch **Schedule**.
5. Select one of the schedule values:
   - None (default)
   - Turns on at custom time
   - Turns on from sunset to sunrise.
6. By default, **Night Light** is disabled. Touch **TURN ON NOW** to enable.
7. Adjust the tint using the **Intensity** slider.

Setting Screen Timeout

The screen turns off and goes into Sleep mode after the selected period of inactivity.

1. Go to **Settings**.
2. Touch **Display** > **Screen timeout**.
3. Select one of the sleep values.
   - **15 seconds**
   - **30 seconds**
   - **1 minute**
   - **2 minutes**
   - **5 minutes**
   - **10 minutes**
   - **30 minutes** (default)

Setting Font Size

Set the size of the font in system apps.

1. Go to **Settings**.
2. Touch **Display** > **Advanced**.
3. Touch **Font size**.

4. Select a font size option:
   - **Small**
   - **Default**
   - **Large**
   - **Largest**

Notification LED Brightness Level

1. Go to **Settings**.
2. Touch **Display** > **Advanced**.
3. Touch **Notification LED Brightness Level**.
4. Use the slider to set the brightness value (default: 15).

Setting Touch Panel Mode

The device display is able to detect touches using a finger, a conductive-tip stylus, or gloved finger.

NOTE: A glove can be made of medical latex, leather, cotton, or wool. For optimal performance use a Zebra certified stylus.

1. Go to **Settings**.
2. Touch **Display** > **Advanced**.
3. Touch **Touch Panel Mode**.
   - **Finger Only** to use a finger on the screen (default).
   - **Glove and Finger** to use a finger or a gloved finger on the screen.

Setting the Date and Time

The date and time are automatically synchronized using a NITZ server when the device is connected to a cellular/wireless network. You are only required to set the time zone or set the date and time if the wireless LAN does not support Network Time Protocol (NTP) or when not connected to a cellular/wireless network.

1. Go to **Settings**.
2. Touch **System** > **Date & time**.
3. Touch **Use network-provided time** to disable automatic date and time synchronization.
4. Touch **Date** to select the date in the calendar.
5. Touch **OK**.
6. Touch **Time**.
   a) Touch the green circle, drag to the current hour, and then release.
   b) Touch the green circle, drag to the current minute, and then release.
   c) Touch **AM** or **PM**.
7. Touch **OK**.
8. Touch **Time zone** to select the current time zone from the list.

9. Touch **Update Interval** to select an interval to synchronize the system time from the network.
10. In **TIME FORMAT**, choose either **Use local default** or **Use 24-hour format**.

General Sound Setting

Press the volume buttons on the device to display on-screen volume controls.

Use the Sound settings to configure media and alarm volumes.

1. Go to **Settings**.
2. Touch **Sound**.
3. Touch an option to set sounds.

Sound Options

- **Media volume** - Controls the music, games, and media volume.
- **Alarm volume** - Controls the alarm clock volume.
- **Notifications volume** - Controls the notification volume.
- **Do Not Disturb** - Mutes some or all sounds and vibrations.
- **Media** - Shows the media player in Quick Settings while sound is playing, allowing quick access.
- **Shortcut to prevent ringing** - Select how the shortcut method prevents ringing.
- **Default notification sound** - Select a sound to play for all system notifications.
- **Default alarm sound** - Select a sound to play for alarms.
- **Other sounds and vibrations**
  - **Screen locking sounds** - Play a sound when locking and unlocking the screen (default – enabled).
- **Advanced**
  - **Charging sounds and vibration** - Play a sound and vibrate when power is applied to the device (default - enabled).
  - **Touch sounds** - Play a sound when making screen selections (default – enabled).
  - **Touch vibration** - Vibrate the device when making screen selections (default – enabled).

Setting Wake-Up Sources

By default, the device wakes from suspend mode when the user presses the **Power** button.

1. Go to **Settings**.
2. Touch **Wake-Up Sources**.
   - **P1**
   - **SCAN**
   - **GUN_TRIGGER** - Programmable button on the Trigger Handle accessory.
3. Touch a checkbox.

   A check appears in the checkbox.

Remapping a Button

Buttons on the device can be programmed to perform different functions or as shortcuts to installed apps. For a list of key names and descriptions, refer to: techdocs.zebra.com.

NOTE: It is not recommended to remap the scan button.

1. Go to **Settings**.
2. Touch **Key Programmer**. A list of programmable buttons displays.
3. Select the button to remap.
4. Touch the **BUTTON REMAPPING** tab or the **SHORTCUT** tab that lists the available functions and applications.
5. Touch a function or application shortcut to map to the button.

NOTE: If you select an application shortcut, the application icon appears next to the button on the Key Programmer screen.

Remappable Keys

Figure 6 Key Positions

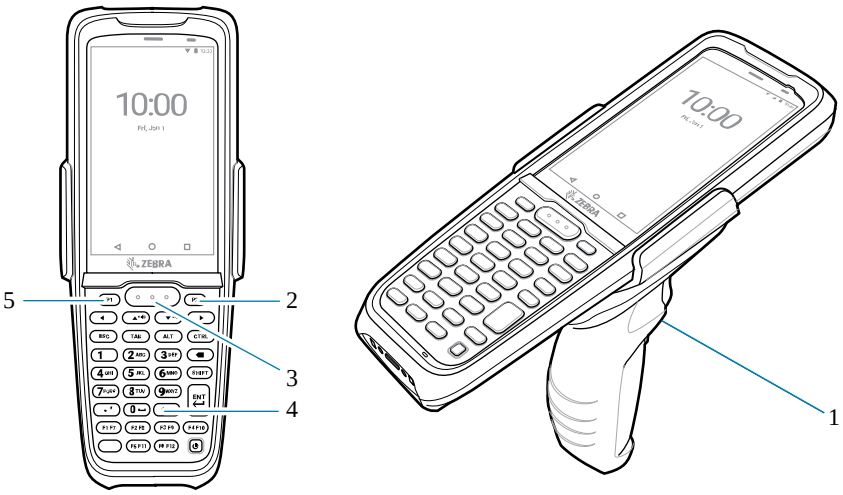

1	GRIP_TRIGGER
2	P2
3	SCAN
4	DIAMOND
5	P1

UI Listed Keys

- GRIP_TRIGGER
- SCAN

- P1
- P2

Other Remappable Keys

- 0-9
- A-Z
- F1-F10
- LEFT
- UP
- DOWN
- RIGHT
- ENTER
- SPACE
- ESC
- DOT (via XML only, not StageNow)
- TAB
- DELETE
- COMMA
- SHIFT
- CTRL
- ALT
- ORANGE

Non-Remappable Keys

- POWER
- BACK (Not a physical key)
- HOME (Not a physical key)
- RECENT (Not a physical key)

Keyboards

The device provides multiple keyboard options.

- Android Keyboard - AOSP devices only
- Gboard - GMS devices only
- Enterprise Keyboard - Not pre-installed on the device. Contact Zebra Support for more information. Only available with Mobility DNA Enterprise License.

NOTE: By default, the Enterprise and Virtual Keyboards are disabled. The Enterprise Keyboard is available for download from the Zebra Support Site.

Keyboard Configuration

This section describes configuring the device's keyboard.

Enabling Keyboards

1. Go to **Settings**.
2. Touch **System** > **Languages & input** > **On-screen keyboard** > **Manage on-screen keyboards**.
3. Touch a keyboard to enable.

Switching Between Keyboards

To switch between keyboards, touch in a text box to display the current keyboard.

NOTE: By default, the Gboard is enabled. All other virtual keyboards are disabled.

- On the Gboard keyboard, touch and hold (GMS devices only).
- On the Android keyboard, touch, and hold (AOSP devices only).
- On the Enterprise keyboard, touch . Only available with Mobility DNA Enterprise License. Not pre-installed on the device. Contact Zebra Support for more information.

Using the Android and Gboard Keyboards

Use the Android or Gboard keyboards to enter text in a text field.

- To configure the keyboard settings, touch and hold "," (comma) and then select **Android keyboard settings**.

Edit Text

Edit entered text and use menu commands to cut, copy, and paste text within or across apps. Some apps do not support editing some or all of the text they display; others may offer their own way to select text.

Entering Numbers, Symbols, and Special Characters

1. Enter numbers and symbols.
   - Touch and hold one of the top-row keys until a menu appears then select a number or special character.
   - Touch the Shift key once for a single capital letter. Touch the Shift key twice to lock in uppercase. Touch the Shift key a third time to unlock Capslock.
   - Touch **?123** to switch to the numbers and symbols keyboard.
   - Touch the **=\<** key on the numbers and symbols keyboard to view additional symbols.
2. Enter special characters.
   - Touch and hold a number or symbol key to open a menu of additional symbols. A larger version of the key displays briefly over the keyboard.

Enterprise Keyboard

The Enterprise Keyboard contains multiple keyboard types.

NOTE: Only available with Mobility DNA Enterprise License.

- Numeric
- Alpha
- Special characters
- Data capture.

Numeric Tab

The numeric keyboard is labeled **123**. The keys displayed vary on the app being used. For example, an arrow displays in **Contacts**, however **Done** displays in **Email** account setup.

Alpha Tab

The alpha keyboard is labeled using the language code. For English, the alpha keyboard is labeled **EN**.

Additional Character Tab

The additional characters keyboard is labeled **#*/**.

- Touch ☺ to enter emoji icons in a text message.
- Touch **ABC** to return to the Symbols keyboard.

Scan Tab

The Scan tab provides an easy data capture feature for scanning barcodes.

Language Usage

Use the **Language & input** settings to change the device's language, including words added to the dictionary.

Changing the Language Setting

1. Go to **Settings**.
2. Touch **System** > **Languages & input**.
3. Touch **Languages**. A list of available languages displays.
4. If the desired language is not listed, touch **Add a language** and select a language from the list.
5. Touch and hold ☰ to the right of the desired language, then drag it to the top of the list.
6. The operating system text changes to the selected language.

Adding Words to the Dictionary

1. Go to **Settings**.
2. Touch **System** > **Languages & input** > **Advanced** > **Personal dictionary** .
3. If prompted, select the language where this word or phase is stored.
4. Touch **+** to add a new word or phrase to the dictionary.
5. Enter the word or phrase.
6. In the Shortcut text box, enter a shortcut for the word or phrase.

Notifications

The user can configure notifications for the device and for specific apps. Device notifications settings allow the user to configure how notifications occur on the device. App notification settings allow the user to configure how notifications for a specific app occur.

To view device notification settings, touch **Settings** > **Apps & notifications** > **Notifications**. To view app notifications, **Settings** > **Apps & notifications** > **App info**, and then select an app.

Setting App Notifications

Configure the notifications settings for a specific app.

1. Go to **Settings**.
2. Touch **Apps & notifications** > **SEE ALL XX APPS** . The App info screen displays.
3. Select an app.
4. Touch **Notifications**.

   Options vary depending on the app selected.

5. Select an available option:

   Show notifications - Select to turn all notifications from this app on (default) or off. Touch a notification category to display additional options.

   - **Alerting** - Allow notifications from this app to make a sound.
     - **Pop on screen** - Allow notifications from this app to pop notifications on the screen.
   - **Alerting** - Allow notifications from this app to make sound or vibrate the device.
     - **Pop on screen** - Allow notifications from this app to pop notifications on the screen.
   - **Silent** - Do not allow notifications from this app to make a sound.
     - **Minimize** - In the Notification panel, collapse notifications to one line.
   - **Silent** - Do not allow notifications from this app to make sound or vibrate.
     - **Minimize** - In the Notification panel, collapse notifications to one line.
   - **Advanced** - Touch for additional options.
     - **Sound** - Select a sound to play for notifications from this app.
     - **Vibrate** - Allow notifications from this app to vibrate the device.
     - **Blink light** - Allow notifications from this app the light the Notification LED blue.
     - **Show notification dot** - Allow notifications from this app to add a notification dot to the app icon.
     - **Override Do Not Disturb** - Allow these notifications to interrupt when Do Not Disturb is enabled.

   Advanced

   - **Allow notification dot** - Do not allow this app to add a notification dot to the app icon.
   - **Additional settings in the app** - Open the app settings.

Viewing Notifications

1. Go to **Settings**.
2. Touch **Apps & Notifications**.
3. Scroll down to **Notifications** to view how many apps have notifications turned off.

Controlling Lock Screen Notifications

Control whether notifications can be seen when the device is locked

1. Go to **Settings**.
2. Touch **Apps & notifications** > **Notifications** .
3. Touch **Notifications on lockscreen** and select one of the following:
   - **Show alerting and silent notifications (default)**
   - **Show alerting notifications only**
   - **Don’t show notifications**.

Enabling Blink Light

The Notification LED lights blue when an app, such as email and VoIP, generates a programmable notification or to indicate when the device is connected to a Bluetooth device. By default, LED notifications are enabled.

1. Go to **Settings**.
2. Touch **Apps & notifications** > **Notifications** > **Advanced** .
3. Touch **Blink light** to toggle the notification on or off.

Applications

The APPS screen displays icons for all installed apps. See Application Deployment for information on installing and uninstalling apps. For information on standard Android apps, go to the Google Play Apps store.

Installed Applications

Aside from the common Google apps, the Zebra-specific apps that are installed on the device are described in this section.

Table 11 Apps

Icon	Description
	Battery Manager - Display battery information (including charge level, status, health, and wear level) and use to place the device in Battery Swap mode when replacing the battery.
	Bluetooth Pairing Utility - Use to pair peripherals with the device by scanning a barcode.
	DataWedge - Enables data capture using the imager.
	Diagnostic Tool - Use to diagnose the device.
	DWDemo - Provides a way to demonstrate the data capture features using the imager.
	Heater Control - Use to check the status of the heater and sensors when using the device in cold environments.
	License Manager - Use to manage software licenses on the device.

Table 11 Apps (Continued)

Icon	Description
	PTT Express - Use to launch PTT Express client for VoIP communication.
	RxLogger - Use to diagnose device and app issues.
	Phone - Use to dial a phone number when used with some Voice over IP (VoIP) clients (VoIP telephony ready only). WAN devices only.
	Settings - Use to configure the device.
	StageNow - Allows the device to stage a device for initial use by initiating the deployment of settings, firmware, and software.
	VoD - The Video on Device basic app provides a how-to video for proper device cleaning. For Video on Device licensing information, go to learning.zebra.com.
	Wireless Analyzer - A diagnostic intelligent app. Use to diagnose surrounding area and display network stats, such as coverage hole detection or AP in the vicinity. Refer to the Worry Free Wi-Fi Analyzer Administrator Guide for Android. Only available with Mobility DNA Enterprise License.
	Zebra Bluetooth Settings - Use to configure Bluetooth logging.
	Zebra Data Services - Use to enable or disable Zebra Data Services. Some options are set by the system administrator.

Accessing Apps

Access all apps installed on the device using the APPS window.

1. On the Home screen, swipe up from the bottom of the screen.
2. Slide the **APPS** window up or down to view more app icons.
3. Touch an icon to open the app.

Switching Between Recent Apps

1. Touch **Recent**.

   A window appears on the screen with icons of recently used apps.

2. Touch .

   A window appears on the screen with icons of recently used apps.
3. Slide the apps displayed up and down to view all recently used apps.
4. Swipe left or right to remove the app from the list and force close the app.
5. Touch an icon to open an app or touch Back to return to the current screen.

Battery Manager

The Battery Manager provides detailed information about the battery.

This section also provides battery swap procedures for supported devices.

Opening Battery Manager

- To open the Battery Manager app, swipe up from the bottom of the Home screen, and then touch .

Battery Manager Information

The Battery Manager displays detailed information about battery charging, health, and status.

Table 12 Battery Icons

Battery Icon	Description
	Battery charge level is between 85% and 100%.
	Battery charge level is between 19% and 84%.
	Battery charge level is between 0% and 18%.

- **Level** - The current battery charge level as a percentage. Displays -% when the level is unknown.
- **Wear** - The health of the battery in graphical form. When the wear level exceeds 80%, the bar color changes to red.

- **Health** - The health of the battery. If a critical error occurs, appears. Touch to view the error description.
  - **Decommission** - The battery is past its useful life and should be replaced. See system administrator.
  - **Good** - The battery is good.
  - **Charge error** - An error occurred while charging. See system administrator.
  - **Over Current** - An over-current condition occurred. See system administrator.
  - **Dead** - The battery has no charge. Replace the battery.
  - **Over Voltage** - An over-voltage condition occurred. See system administrator.
  - **Below Temperature** - The battery temperature is below the operating temperature. See system administrator.
  - **Failure Detected** - A failure has been detected in the battery. See system administrator.
  - **Unknown** - See system administrator.
- **Charge Status**
  - **Not charging** - The device is not connected to AC power.
  - **Not charging** - The device is not charging.
  - **Charging-AC** - The device is connected to AC power and charging or is fast charging via USB.
  - **Charging-USB** - The device is connected to a host computer with a USB cable and charging.
  - **Discharging** - The battery is discharging.
  - **Full** - The battery is fully charged.
  - **Unknown** - The battery status is unknown.
- **Time until Full** - The amount of time until the battery is fully charged.
- **Time since charging** - The amount of time since the device began charging.

- **Time until empty** - The amount of time until the battery is empty.
- **Advanced info** - Touch to view additional battery information.
  - **Battery present status** - Indicates that the battery is present.
  - **Battery level** - The battery charge level as a percentage of scale.
  - **Battery scale** - The battery scale level used to determine battery level (100).
  - **Battery voltage** - The current battery voltage in millivolts.
  - **Battery temperature** - The current battery temperature in degrees Centigrade.
  - **Battery technology** - The type of battery.
  - **Battery current** - The average current into or out of the battery over the last second in mAh.
  - **Battery manufacture date** - The date of manufacture.
  - **Battery serial number** - The battery serial number. The number matches the serial number printed on the battery label.
  - **Battery part number** - The battery part number.
  - **Battery decommission status** - Indicates if the battery is past its life span.
    - **Battery Good** - The battery is in good health.
    - **Decommissioned Battery** - The battery is past its useful life and should be replaced.
  - **Base cumulative charge** - Cumulative charge using Zebra charging equipment only.
  - **Battery present capacity** - Maximum amount of charge that could be pulled from the battery under the present discharge conditions if the battery were fully charged.
  - **Battery health percentage** - With a range from 0 to 100, this is the ratio of “present_capacity” to “design_capacity” at a discharge rate of “design_capacity”.
  - **% decommission threshold** - The default % decommission threshold for a gifted battery as 80%.
  - **Battery present charge** - Amount of usable charge remaining in the battery at present under the current discharge conditions.
  - **Battery total cumulative charge** - The total accumulated charge in all chargers.
  - **Battery time since first use** - The time passed since the battery was placed in a Zebra terminal for the first time.
  - **Battery error status** - The error status of the battery.
  - **App version** - The application version number.

Battery Manager Swap Tab

Use to place the device in Battery Swap mode when replacing the battery. Follow the instructions on the screen. Touch **I understand. Proceed with swap** button.

NOTE: The Swap tab also appears when the user presses the Power button and selects Battery Swap.

Camera

This section provides information for taking photos and recording videos using the integrated digital cameras.

NOTE: The device saves photos and videos on the microSD card, if installed and the storage path is changed manually. By default, or if a microSD card is not installed, the device saves photos and videos on internal storage.

Camera Settings

In Photo mode, camera settings appear on the screen. Touch ••• > ⚙ to display the camera settings options.

- **General** - These settings apply to both the still camera and video camera.
  - **GPS location** - Turn On (default) or Off.
  - **Face Detection** - Select to turn face detection Off (default) or On.
  - **Storage** – Set the location to store the photo to: Phone or SD Card.

- **Still Camera**
  - **Countdown timer** - Select Off (default), 2 seconds, 5 seconds or 10 seconds.
  - **Continuous Shot** - Select to take a series of photos quickly while holding the capture button. Off (default) or On.
  - **Picture size** - The size (in pixels) of the photo to: 13M pixels (default), 8M pixels, 5M pixels, 3M pixels, HD1080, 2M pixels, HD720, 1M pixels, or WVGA.
  - **Picture quality** - Set the picture quality setting to: Low, Standard, or High (default).
  - **Redeye reduction** - Helps eliminate the redeye effect. Available for the rear camera only. Options: Disabled (default), or Enable.
  - **Exposure** - Set the exposure settings to: -2, -1.5, -1, -0.5, 0 (default), +0.5, +1, +1.5, +2.
  - **White balance** - Select how the camera adjusts colors in different kinds of light, to achieve the most natural-looking colors:
    - **Incandescent** - Adjust the white balance for incandescent lighting.
    - **Fluorescent** - Adjust the white balance for fluorescent lighting.
    - **Auto** - Adjust the white balance automatically (default).
    - **Daylight** - Adjust the white balance for daylight.
    - **Cloudy** - Adjust the white balance for a cloudy environment.
  - **Shutter Sound** - Select to play a shutter sound when taking a photo. Options: Disable or Enable (default).
  - **AF Animation** - Select to enable or disable the camera focus ring in the camera preview. Options: Disable (default) or Enable.
  - **Picture Format** - All still images are saved in JPEG format.
- **Video Camera**
  - **Video quality** - Set video quality to: 4k UHD, HD 1080p (default), HD 720p, SD 480p, VGA, CIF, or QVGA.
  - **Image Stabilization** - Set to reduce blurry videos due to device movement. Options: On or Off (default).
  - **Noise Reduction** - Off (default), Fast, or High Quality.
  - **Video Encoder** - Set the video encoder to: MPEG4, H264 (default), or H265.
  - **Audio Encoder** - Set the audio encoder to: AMRNB, or AAC (default).
  - **Video Rotation** - Set the rotation of the video to: 0 (default), 90, 180, or 270.
  - **Time Lapse** - Set the time lapse interval to: Off (default), or a time between 0.5 seconds and 24 hours.
- **System**
  - **Restore default** - Select to restore all settings to the default values.
  - **Version Info** - Displays the software version of the camera app.

Taking Photos

1. Swipe up from the bottom of the Home screen and touch **Camera**.

1	Scene mode
2	Filters
3	Camera switch
4	HDR
5	Settings
6	Camera mode
7	Shutter button
8	Gallery

2. If necessary, touch the Camera Mode icon and touch .
3. Frame the subject on the screen.
4. To zoom in or out, press two fingers on the display and pinch or expand your fingers. The zoom controls appear on the screen.

5. Touch an area on the screen to focus. The focus circle appears. The two bars turn green when in focus.
6. Touch .

The camera takes a photo and a shutter sound plays.

The photo momentarily displays as a thumbnail in the lower-left corner.

Recording Videos

1. Swipe up from the bottom of the Home screen and touch **Camera**.
2. Touch the camera mode menu and touch .

1	Color effect
2	Camera switch
3	Audio
4	Settings
5	Camera mode
6	Shutter button

7	Gallery

3. Point the camera and frame the scene.
4. Touch ⊙ to start recording.

   The video time remaining appears in the top left of the screen.
5. Touch ⊙ to end the recording.

The video momentarily displays as a thumbnail in the lower left corner.

DataWedge Demonstration

Use DataWedge Demonstration (DWDemo) to demonstrate data capture functionality. To configure DataWedge, refer to techdocs.zebra.com/datawedge/.

NOTE: DataWedge is enabled on the Home screen. To disable this feature, go to the DataWedge settings and disable the **Launcher** profile.

DataWedge Demonstration Icons

Table 13 DataWedge Demonstration Icons

Category	Icon	Description
Illumination		Imager illumination is on. Touch to turn illumination off.
Illumination		Imager illumination is off. Touch to turn illumination on.
Data Capture		The data capture function is through the internal imager.
Data Capture		A Bluetooth scanner is connected.
Data Capture		A Bluetooth scanner is not connected.
Scan Mode		Imager is in picklist mode. Touch to change to normal scan mode.
Scan Mode		Imager is in normal scan mode. Touch to change to picklist mode.
Menu		Opens a menu to view the application information or to set the application DataWedge profile.

Selecting a Scanner

See the Data Capture section for more information.

- To select a scanner, touch ⋮ > **Settings** > **Scanner Selection**.
- Press the programmable button or touch the yellow scan button to capture data.

  The data appears in the text field below the yellow button.

PTT Express Voice Client

PTT Express Voice Client enables Push-To-Talk (PTT) communication between disparate enterprise devices. Leveraging existing Wireless Local Area Network (WLAN) infrastructure, PTT Express delivers simple PTT communication without requiring a voice communication server.

NOTE: Requires a PTT Express License. Not available in all countries.

- **Group Call** - Press and hold **PTT (Talk)** to start communicating with other voice client users.
- **Private Response** - Double-press **PTT** to respond to the originator of the last broadcast or to make a Private Response.

PTT Express User Interface

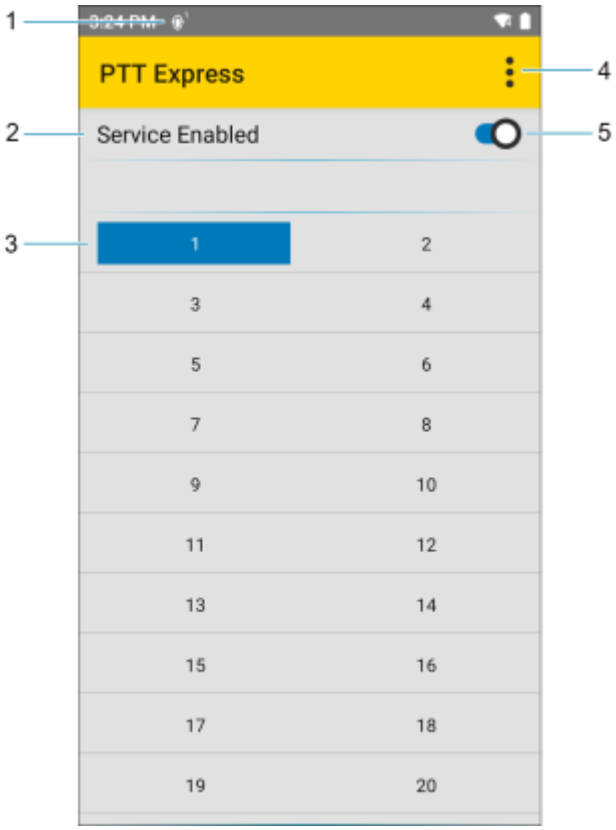

Number	Item	Description
1	Notification icon	Indicates the current state of the PTT Express client.
2	Service indication	Indicates the status of the PTT Express client. Options are: Service Enabled, Service Disabled or Service Unavailable.
3	Talk group	Lists all 32 Talk Groups available for PTT communication.
4	Settings	Opens the PTT Express Settings screen.
5	Enable/disable switch	Turns the PTT service on and off.

PTT Audible Indicators

The following tones provide helpful cues when using the voice client.

- **Talk Tone**: Double chirp. Plays when the Talk button is depressed. This is a prompt for you to start talking.
- **Access Tone**: Single beep. Plays when another user just finished a broadcast or response. You can now initiate a Group Broadcast or Private Response.
- **Busy Tone**: Continuous tone. Plays when the Talk button is depressed and another user is already communicating on the same talkgroup. Plays after the maximum allowed talk time is reached (60 seconds).
- **Network Tone**:
  - Three increasing pitch beeps. Plays when PTT Express acquires the WLAN connection and the service is enabled.
  - Three decreasing pitch beeps. Plays when PTT Express loses the WLAN connection or the service is disabled.

PTT Notification Icons

Notification icons indicate the current state of the PTT Express Voice client.

Table 14 PTT Express Icons

Status Icon	Description
	The PTT Express Voice client is disabled.
	The PTT Express Voice client is enabled but not connected to a WLAN.
	The PTT Express Voice client is enabled, connected to a WLAN, and listening on the Talk Group indicated by the number next to the icon.
	The PTT Express Voice client is enabled, connected to a WLAN, and communicating on the Talk Group indicated by the number next to the icon.

Table 14 PTT Express Icons (Continued)

Status Icon	Description
	The PTT Express Voice client is enabled, connected to a WLAN, and in a private response.
	The PTT Express Voice client is enabled and muted.
	The PTT Express Voice client is enabled but it is not able to communicate due to a VoIP telephony call in progress.

Enabling PTT Communication

1. Swipe up from the bottom of the Home screen and touch .
2. Slide the Enable/Disable Switch to the **ON** position. The button changes to **ON**.

Selecting a Talk Group

There are 32 Talk Groups that can be selected by PTT Express users. However, only one talk group can be enabled at a time on the device.

- Touch one of the 32 Talk Groups. The selected Talk Group is highlighted.

PTT Communication

This section describes the default PTT Express client configuration. Refer to the PTT Express V1.2 User Guide for detailed information on using the client.

PTT communication may be established as a Group Call.

Creating a Group Call

1. Press and hold **PTT** (1) (or **Talk** on the headset) and listen for the talk tone.

   If you hear a busy tone, release the button and wait a moment before making another attempt. Ensure that PTT Express and the WLAN are enabled.

NOTE: Holding the button for more than 60 seconds (default) drops the call, allowing others to make Group calls. Release the button when finished talking to allow others to make calls.

2. Start talking after hearing the talk tone.
3. Release the button when finished talking.

Responding with a Private Response

The Private Response can only be initiated once a Group Call has been established. The initial Private Response is made to the originator of the Group Call.

1. Wait for an access tone.
2. Within 10 seconds, double-press **PTT**, and listen for the talk tone.

3. If you hear a busy tone, release the button and wait a moment before making another attempt. Ensure that PTT Express and the WLAN are enabled.
4. Start talking after the talk tone plays.
5. Release the button when finished talking.

Disabling PTT Communication

1. Swipe up from the bottom of the Home screen and touch .
2. Slide the **Enable/Disable Switch** to the **OFF** position. The button changes to **OFF**.

RxLogger

RxLogger is a comprehensive diagnostic tool that provides application and system metrics, and diagnoses device and application issues.

RxLogger logs the following information: CPU load, memory load, memory snapshots, battery consumption, power states, wireless logging, cellular logging, TCP dumps, Bluetooth logging, GPS logging, logcat, FTP push/pull, ANR dumps, etc. All generated logs and files are saved onto flash storage on the device (internal or external).

RxLogger Configuration

RxLogger is built with an extensible plug-in architecture and comes packaged with a number of plug-ins already built-in. For information on configuring RxLogger, refer to techdocs.zebra.com/rxlogger/.

To open the configuration screen, from the RxLogger home screen touch **Settings**.

Configuration File

All RxLogger settings are stored in a file on the device, permitting remote configuration and mass deployment of setting files using an enterprise mobile management (EMM) system.

The config.json configuration file is located in the RxLogger\config folder. Copy the file from the device to a host computer using a USB connection. Edit the configuration file and then replace the JSON file on the device. There is no need to stop and restart the RxLogger service because the file change is automatically detected.

The config.json configuration file is located on the microSD card in the RxLogger\config folder. Copy the file from the device to a host computer using a USB connection. Edit the configuration file and then replace the JSON file on the device. There is no need to stop and restart the RxLogger service because the file change is automatically detected.

IMPORTANT: The RxLogger configuration file is human-readable, but it should not be edited by hand as doing so can lead to unpredictable behavior. Zebra recommends modifying RxLogger settings only through the RxLogger UI.

- File name: `config.json`
- Location: `/<internal_storage>/RxLogger`
- With external SD Card: `/storage/sdcard1/RxLogger`
- With no external SD Card: `/storage/sdcard0/RxLogger` When a new settings file is pushed to the device, RxLogger restarts all affected modules and applies the new settings immediately.

Copy the file from the device to a host computer using a USB connection. Edit the configuration file through the RxLogger UI and then replace the JSON file on the device. There is no need to stop and restart the RxLogger service because the file change is automatically detected.

Enabling Logging

1. Swipe the screen up and select .
2. Touch **Start**.

Disabling Logging

1. Swipe the screen up and select .
2. Touch **Stop**.

Extracting Log Files

1. Connect the device to a host computer using a USB connection.
2. Using a file explorer, navigate to the RxLogger folder.
3. Copy the file from the device to the host computer.
4. Disconnect the device from the host computer.

Backing Up Data

RxLogger Utility allows the user to make a zip file of the RxLogger folder in the device, which by default contains all the RxLogger logs stored in the device.

- To save the backup data, touch > **BackupNow**.

RxLogger Utility

RxLogger Utility is a data monitoring application for viewing logs in the device while RxLogger is running. Logs and RxLogger Utility features are accessed using Main Chat Head.

Initiating the Main Chat Head

1. Open **RxLogger**.
2. Touch > **Toggle Chat Head**.

   The Main Chat Head icon appears on the screen.
3. Touch and drag the Main Chat Head icon to move it around the screen.

Removing the Main Chat Head

1. Touch and drag the icon.

   A circle with an X appears.
2. Move the icon over the circle and then release.

Viewing Logs

1. Touch the Main Chat Head icon.

   The RxLogger Utility screen appears.
2. Touch a log to open it.

   The user can open many logs with each displaying a new Sub Chat Head.
3. If necessary, scroll left or right to view additional Sub Chat Head icons.
4. Touch a Sub Chat Head to display the log contents.

Removing a Sub Chat Head Icon

- To remove a Sub Chat Head icon, press and hold the icon until it disappears.

Backing Up In Overlay View

RxLogger Utility allows the user to make a zip file of the RxLogger folder in the device, which by default contains all the RxLogger logs stored in the device.

The Backup icon is always available in Overlay View.

1. Touch .

   The Backup dialog box appears.
2. Touch **Yes** to create the backup.

Data Capture

This section provides information for capturing barcode data using various scanning options.

The device supports data capture using:

- SE4100 Internal Imager
- Integrated Camera
- RS507/RS507X Hands-free Imager
- RS5100 Bluetooth Ring Scanner
- RS6000 Hands-free Imager
- SE4100 Internal Imager
- DS3678 Digital Scanner
- LI3678 Linear Scanner

Imaging

The device with an integrated 2D imager has the following features:

- Omnidirectional reading of a variety of barcode symbologies, including the most popular linear, postal, PDF417, Digimarc, and 2D matrix code types.
- The ability to capture and download images to a host for a variety of imaging applications.
- Advanced intuitive dot aiming for easy point-and-shoot operation.

The imager uses imaging technology to take a picture of a barcode, stores the resulting image in memory, and executes state-of-the-art software decoding algorithms to extract the barcode data from the image.

Operational Modes

The device with an integrated imager supports three modes of operation.

Activate each mode by pressing. **Scan**.

- Decode mode — The device attempts to locate and decode enabled barcodes within its field of view. The imager remains in this mode as long as you hold the scan button or until it decodes a barcode.

NOTE: To enable Picklist Mode, configure in DataWedge or set in an application using an API command.

- Picklist mode — Selectively decode a barcode when more than one barcode is in the device's field of view by moving the aiming dot over the required barcode. Use this feature for pick lists containing multiple barcodes and manufacturing or transport labels containing more than one barcode type (either 1D or 2D).

NOTE: To enable MultiBarcode Mode, configure it in DataWedge or set it in an application using an API command.

- MultiBarcode Mode — In this mode, the device attempts to locate and decode a specific number of unique barcodes within its field of view. The device remains in this mode as long as the user holds the scan button or until it decodes all the barcodes.
  - The device attempts to scan the programmed number of unique barcodes (from 2 through 100). This may be a fixed amount, meaning it scans X unique barcodes or it can be set as a range to scan a different number of unique barcodes each session.
  - If there are duplicate barcodes (same symbology type and data), only one of the duplicate barcodes is decoded, and the remainder is ignored. If the label has two duplicate barcodes plus another two different barcodes, a maximum of three barcodes will be decoded from that label; one will be ignored as a duplicate.
  - Barcodes can be of multiple symbology types and still be acquired together. For example, if the specified quantity for a MultiBarcode Mode scan is four, two barcodes can be symbology type Code 128, and the other two can be symbology type Code 39.
  - If the specified number of unique barcodes is not initially in view of the device, the device will not decode any data until the device is moved to capture the additional barcode(s) or time out occurs. If the device field of view contains a number of barcodes greater than the specified quantity, the device randomly decodes barcode(s) until the specified number of unique barcodes is reached. For example, if the count is set to two and eight barcodes are in the field of view, the device decodes the first two unique barcodes it sees, returning the data in random order.
  - MultiBarcode Mode does not support concatenated barcodes.

Scanning Considerations

Typically, scanning is a simple matter of aim, scan, and decode, with a few quick trial efforts to master it.

However, consider the following to optimize scanning performance:

- Range — Scanners decode optimally over a particular working range — minimum and maximum distances from the barcode. This range varies according to barcode density and scanning device optics. Scan within range for quick and constant decodes; scanning too close or too far away prevents decodes. Move the scanner closer and further away to find the right working range for the barcodes being scanned.
- Angle — Scanning angle is important for quick decodes. When the illumination/flash reflects directly back into the imager, the specular reflection can blind/saturate the imager. To avoid this, scan the barcode so that the beam does not bounce directly back. Do not scan at too sharp an angle; the scanner needs to collect scattered reflections from the scan to make a successful decode. Practice quickly shows what tolerances to work within.
- Hold the device farther away for larger symbols.
- Move the device closer for symbols with bars that are close together.

NOTE: Scanning procedures depend on the app and device configuration. An app may use different scanning procedures from the one listed above.

Digital Camera

The device with an integrated camera based barcode scanning solution has the following features:

NOTE: The integrated camera is intended for light-duty barcode scanning. For heavy-duty scanning, 100 or more scans per day, use the 2D imager.

- Omnidirectional reading of a variety of barcode symbologies, including the most popular linear, postal, QR, PDF417, and 2D matrix code types.
- Cross-hair reticle for easy point-and-shoot operation.
- Picklist mode to decode a particular barcode from many in the field of view.

The solution uses the advanced camera technology to take a digital picture of a barcode, and executes state-of-the-art software decoding algorithms to extract the data from the image.

On camera only devices without an internal scan engine, the back camera is used for barcode scanning.

Scanning with the Internal Imager

Use the internal imager to capture barcode data.

1. Ensure that an application is open on the device and a text field is in focus (text cursor in text field).
2. Point the exit window of the device at a barcode.

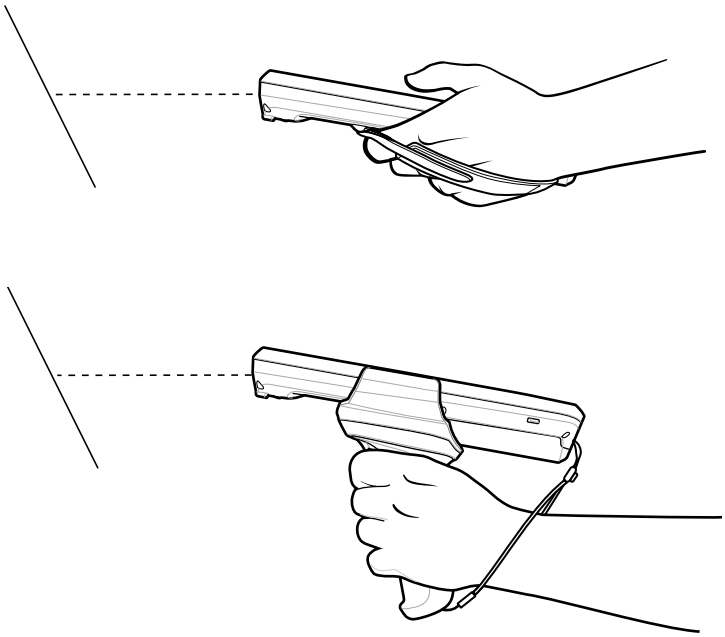

3. Press and hold the Scan button or trigger.

   The aiming pattern turns on to assist in aiming.

4. Ensure the barcode is within the area formed by the aiming pattern. The aiming dot is used for increased visibility in bright lighting conditions.

Figure 7 Aiming Pattern

NOTE: When the device is in Pick List Mode, the device does not decode the barcode until the green aiming dot touches the barcode.

Figure 8 Aiming Pattern - Picklist

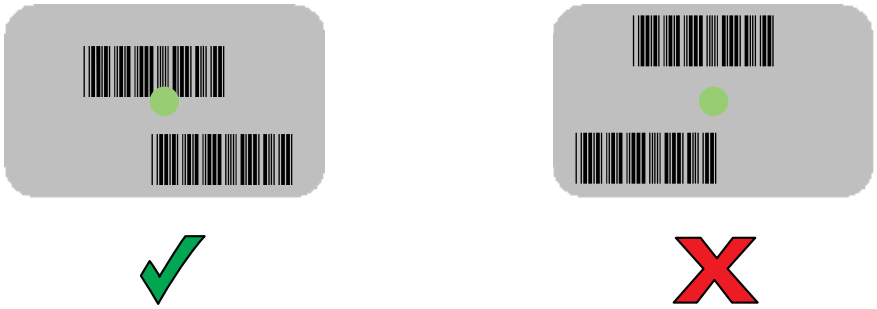

The Data Capture LED lights green, and a beep sounds, by default, to indicate the barcode was decoded successfully.

5. Release the Scan button.

NOTE: Imager decoding usually occurs instantaneously. The device repeats the steps required to take a digital picture (image) of a poor or difficult barcode as long as the scan button remains pressed.

The barcode content data displays in the text field.

Scanning with Internal Camera

Use the internal camera to capture barcode data.

NOTE: The integrated camera is intended for light-duty barcode scanning. For heavy-duty scanning, 100 or more scans per day, use the 2D imager.

1. Ensure that an app is open on the device and a text field is in focus (text cursor in text field).
2. Point the camera exit window on the back of the device at a barcode.
3. Press and hold the Scan button. By default, a preview window appears on the screen.
4. If Picklist mode is enabled, move the device until the bar code is centered under the red target on the screen.

5. Move the device until the barcode is visible on the screen.

   The Decode LED lights green, a beep sounds and the device vibrates, by default, to indicate the bar code was decoded successfully

The captured data appears in the text field.

Scanning with the RS507/RS507X Hands-Free Imager

Use the RS507/RS507X Hands-Free Imager to capture barcode data.

Figure 9 RS507/RS507X Hands-Free Imager

Refer to the RS507/RS507X Hands-free Imager Product Reference Guide for more information.

NOTE: To read a barcode, a scan-enabled app is required. The device contains the DataWedge app that allows the user to enable the scanner to decode barcode data and display the barcode content.

To scan with the RS507/RS507x:

1. Pair the RS507/RS507X with the device.
2. Ensure that an app is open on the device and a text field is in focus (text cursor in text field).
3. Point the RS507/RS507X at a barcode.

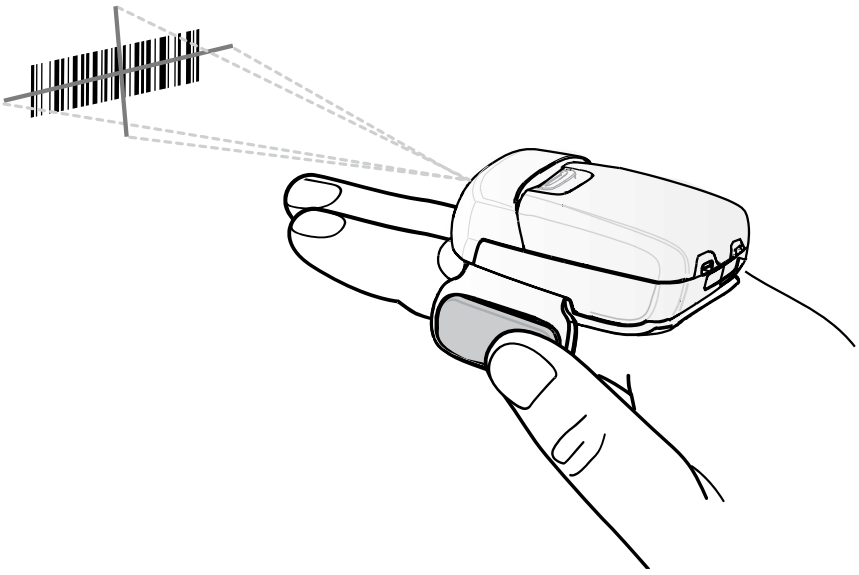

4. Press and hold the trigger.

   The red laser aiming pattern turns on to assist in aiming. Ensure the barcode is within the area formed by the cross-hairs in the aiming pattern. The aiming dot increases visibility in bright lighting conditions.

   Figure 10 RS507/RS507X Aiming Pattern

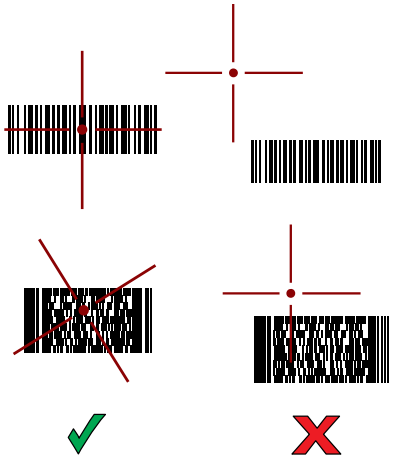

   When the RS507/RS507X is in Pick List mode, the RS507/RS507X does not decode the barcode until the center of the crosshair touches the barcode.

   Figure 11 RS507/RS507X Pick List Mode with Multiple Barcodes in Aiming Pattern

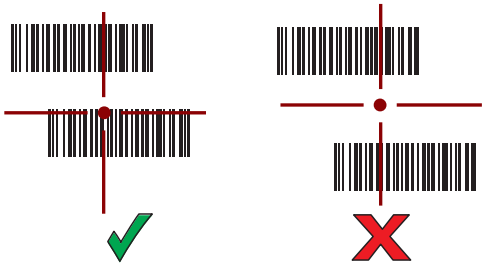

   The RS507/RS507X LEDs light green and a beep sounds to indicate the barcode was decoded successfully.

   The captured data appears in the text field.

Scanning with the RS5100 Ring Scanner

Use the RS5100 Ring Scanner to capture barcode data.

Figure 12 RS5100 Ring Scanner

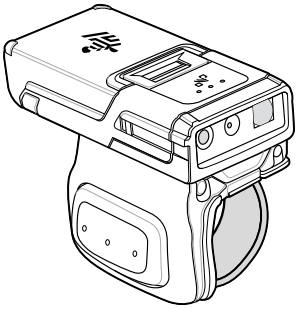

Refer to the RS5100 Ring Scanner Product Reference Guide for more information.

NOTE: To read a barcode, a scan-enabled app is required. The device contains the DataWedge app that allows the user to enable the scanner to decode barcode data and display the barcode content.

To scan with the RS5100:

1. Pair the RS5100 with the device.
2. Ensure that an app is open on the device and a text field is in focus (text cursor in text field).
3. Point the RS5100 at a barcode.

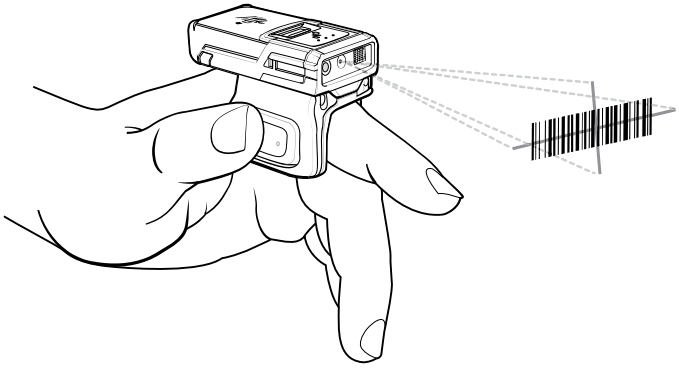

4. Press and hold the trigger.

   The red laser aiming pattern turns on to assist in aiming. Ensure the barcode is within the area formed by the cross-hairs in the aiming pattern. The aiming dot increases visibility in bright lighting conditions.

   Figure 13 RS5100 Aiming Pattern

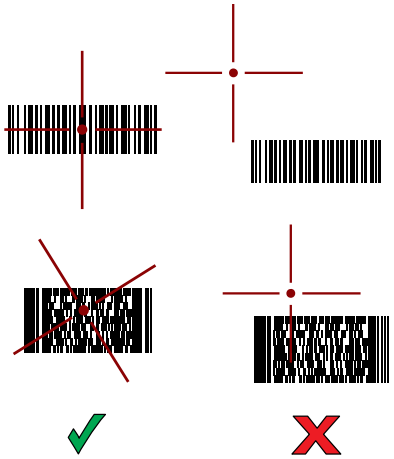

   When the RS5100 is in Pick List mode, the RS5100 does not decode the barcode until the center of the crosshair touches the barcode.

   Figure 14 RS5100 Pick List Mode with Multiple Barcodes in Aiming Pattern

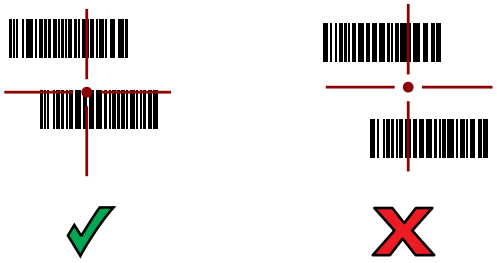

   The RS5100 LEDs light green and a beep sounds to indicate the barcode was decoded successfully.

   The captured data appears in the text field.

Scanning with the RS6000 Bluetooth Ring Scanner

Use the RS6000 Bluetooth Ring Scanner to capture barcode data.

Figure 15 RS6000 Bluetooth Ring Scanner

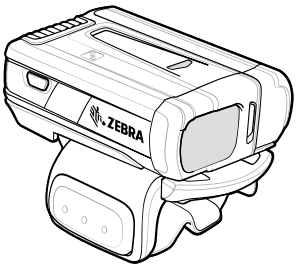

Refer to the RS6000 Bluetooth Ring Scanner Product Reference Guide for more information.

NOTE: To read a barcode, a scan-enabled app is required. The device contains the DataWedge app that allows the user to enable the scanner to decode barcode data and display the barcode content.

To scan with the RS6000:

1. Pair the RS6000 with the device.
2. Ensure that an app is open on the device and a text field is in focus (text cursor in text field).
3. Point the RS6000 at a barcode.

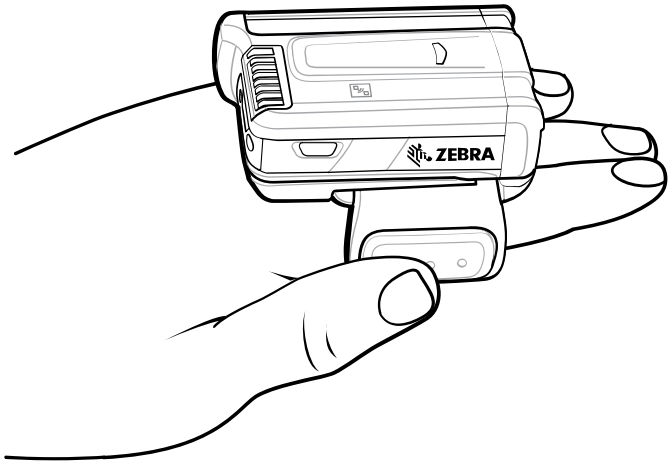

4. Press and hold the trigger.

   The red laser aiming pattern turns on to assist in aiming. Ensure the barcode is within the area formed by the cross-hairs in the aiming pattern. The aiming dot increases visibility in bright lighting conditions.

   Figure 16 RS6000 Aiming Pattern

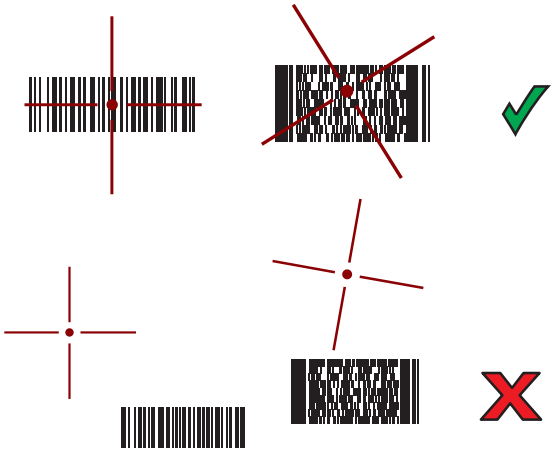

   When the RS6000 is in Pick List mode, the RS6000 does not decode the barcode until the center of the crosshair touches the barcode.

   Figure 17 RS6000 Pick List Mode with Multiple Barcodes in Aiming Pattern

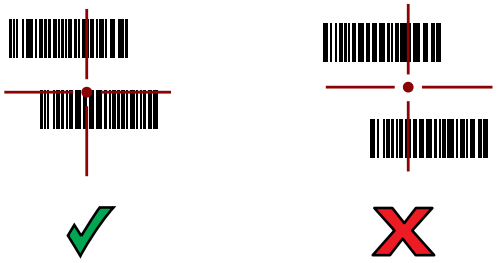

   The RS6000 LEDs light green and a beep sounds to indicate the barcode was decoded successfully.

   The captured data appears in the text field.

Scanning with the DS3678 Bluetooth Scanner

Use the DS3678 Bluetooth Scanner to capture barcode data.

Figure 18 DS3678 Digital Scanner

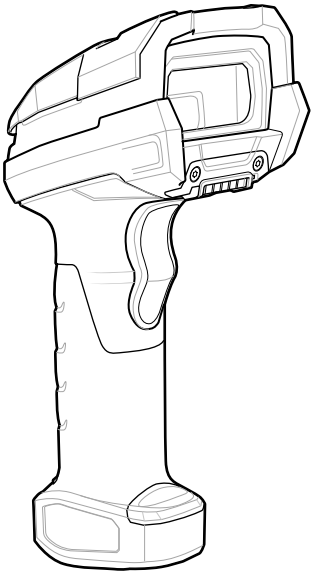

Refer to the DS3678 Product Reference Guide for more information.

NOTE: To read a barcode, a scan-enabled app is required. The device contains the DataWedge app that allows the user to enable the scanner to decode barcode data and display the barcode content.

To scan with the DS3678 scanner:

1. Pair the scanner with the device. See Pairing Bluetooth Scanners for more information.
2. Ensure that an app is open on the device and a text field is in focus (text cursor in text field).

3. Point the scanner at a barcode.

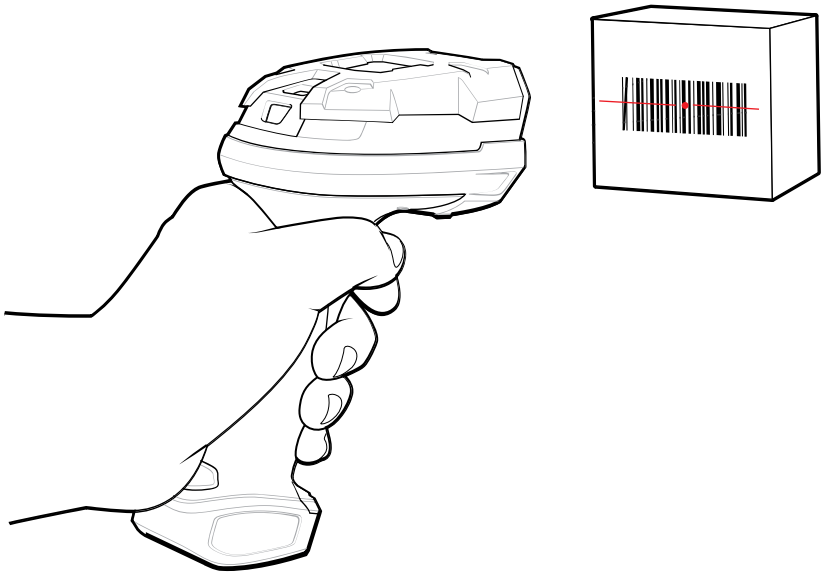

4. Press and hold the trigger.

   Ensure the barcode is within the area formed by the aiming pattern. The aiming dot increases visibility in bright lighting conditions.

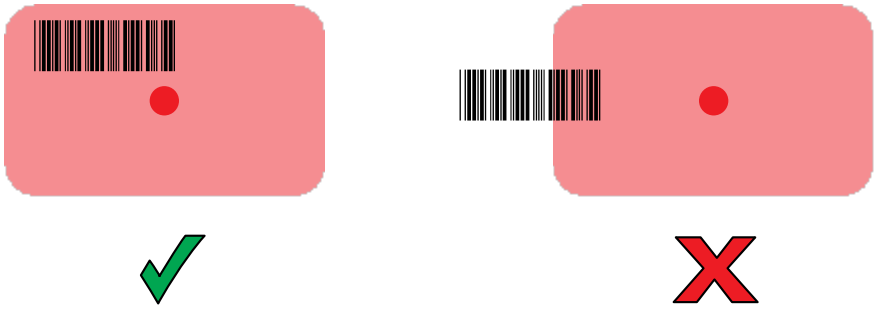

   The captured data appears in the text field.

Scanning with the LI3678 Linear Imager

Use the LI3678 linear imager to capture barcode data.

Figure 19 LI3678 Bluetooth Scanner

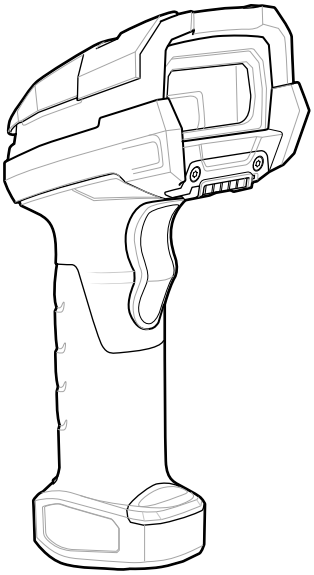

Refer to the LI3678 Product Reference Guide for more information.

NOTE: To read a barcode, a scan-enabled app is required. The device contains the DataWedge app that allows the user to enable the scanner to decode barcode data and display the barcode content.

To scan with the LI3678:

1. Pair the LI3678 with the device. See Pairing a Bluetooth Scanner for more information.
2. Ensure that an app is open on the device and a text field is in focus (text cursor in text field).
3. Point the LI3678 at a barcode.
4. Press and hold the trigger.

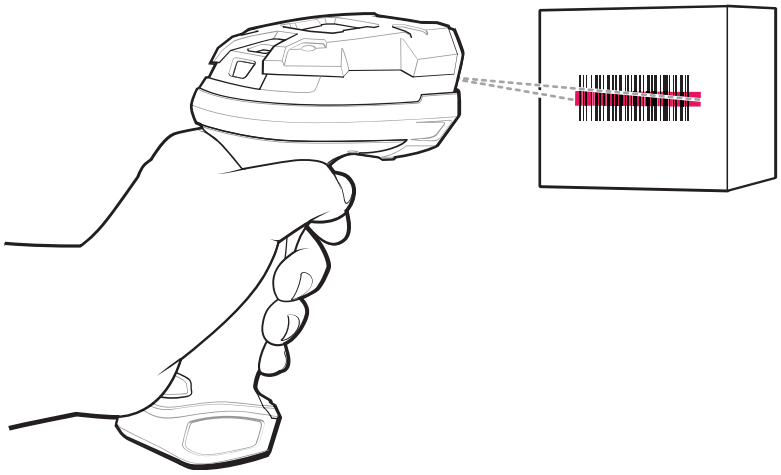

5. Ensure the aiming pattern covers the barcode.

Upon successful decode, the scanner beeps and the LED displays a single green flash.

The captured data appears in the text field.

Pairing a Bluetooth Ring Scanner

Before using a Bluetooth Ring Scanner with the device, connect the device to the Ring Scanner.

To connect the Ring Scanner to the device, use one of the following methods:

- Near Field Communication (NFC)
- Simple Serial Interface (SSI)
- Bluetooth Human Interface Device (HID) Mode

Pairing in SSI Mode Using Near Field Communication

The device provides the ability to pair the RS5100 or RS6000 Ring Scanner in SSI Mode using NFC.

1. Ensure that NFC is enabled on the device.
2. Align the NFC icon on the Ring Scanner with the NFC icon on the back of the device.

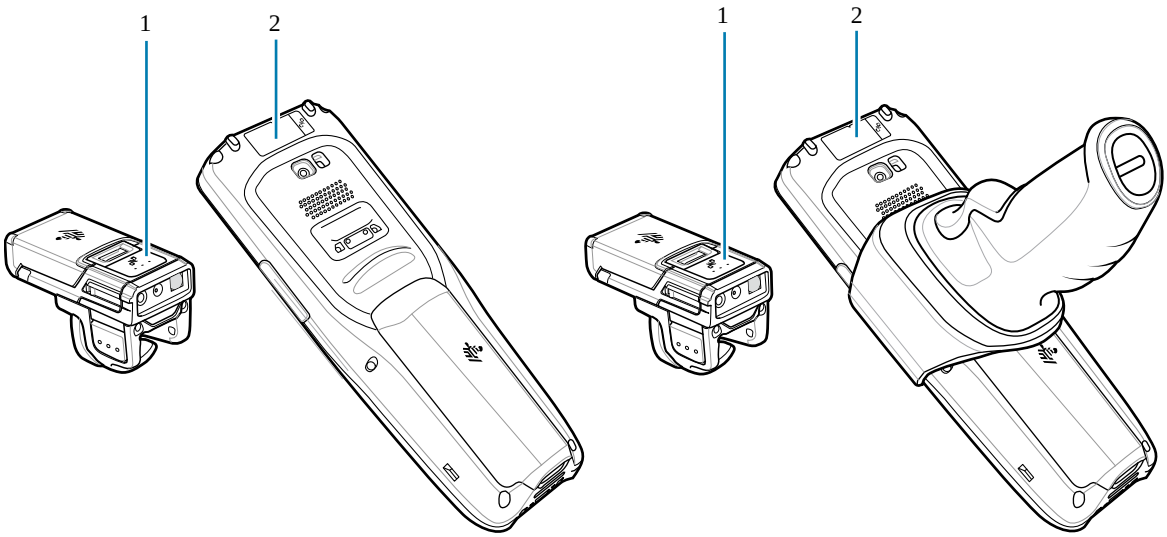

1	NFC logo on the scanner
2	NFC antenna area

The Status LED blinks blue indicating that the Ring Scanner is attempting to establish a connection with the device. When a connection is established, the Status LED turns off and the Ring Scanner emits a single string of low/high beeps.

A notification appears on the device screen.

The icon appears in the Status bar.

Pairing in HID Mode Using Near Field Communication

The device provides the ability to pair the RS5100 or RS6000 Ring Scanner in HID Mode using NFC.

1. Ensure that NFC is enabled on the device.
2. Ensure that Bluetooth is enabled on both devices.
3. Ensure that the Bluetooth device to discover is in discoverable mode.
4. Ensure that the two devices are within 10 meters (32.8 feet) of one another.
5. Place the Ring Scanner in Human Interface Device (HID) mode. If the Ring Scanner is already in HID mode, skip to step 6.
   a) Remove the battery from the Ring Scanner.
   b) Press and hold the Restore key.
   c) Install the battery onto the Ring Scanner.
   d) Keep holding the Restore key for about five seconds until a chirp is heard and the Scan LEDs flash green.
   e) Scan the barcode below to place the Ring Scanner in HID mode.

   Figure 20 Bluetooth HID Barcode

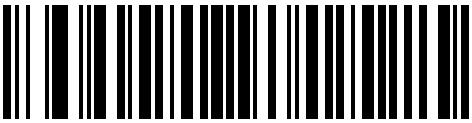

6. Remove the battery from the Ring Scanner.
7. Re-install the battery into the Ring Scanner.

8. Align the NFC icon on the Ring Scanner with the NFC icon on the device.

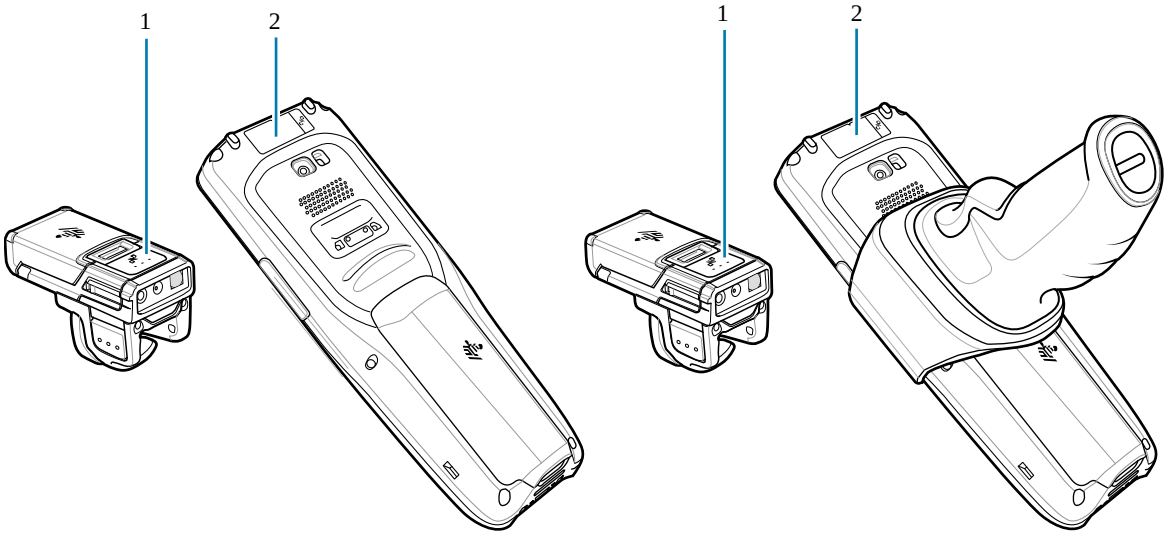

1	NFC logo scanner
2	NFC antenna area

The Status LED blinks blue indicating that the Ring Scanner is attempting to establish a connection with the device. When a connection is established, the Status LED turns off and the Ring Scanner emits a single string of low/high beeps.

A notification appears on the device screen.

The icon appears in the Status bar.

Pairing a Bluetooth Scanner

Before using a Bluetooth scanner with the device, connect the device to the Bluetooth scanner.

Connect the scanner to the device using one of the following methods:

- Simple Serial Interface (SSI) mode
- Bluetooth Human Interface Device (HID) mode

Pairing Using Simple Serial Interface

Pair the Ring Scanner to the device using Simple Serial Interface.

1. Ensure that the two devices are within 10 meters (32.8 feet) of one another.
2. Install the battery into the scanner.

3. Swipe up from the bottom of the Home screen and touch .

4. Using the Ring Scanner, scan the barcode on the screen.

   The Ring Scanner emits a string of high/low/high/low beeps. The Scan LED flashes green indicating that the Ring Scanner is attempting to establish a connection with the device. When a connection is established, the Scan LED turns off and the Ring Scanner emits one string of low/high beeps.

   A notification appears on the Notification panel and the icon appears in the Status bar.

Pairing Using Bluetooth Human Interface Device

Pair the Bluetooth scanner to the device using HID.

To pair the scanner with the device using HID:

1. Remove the battery from the scanner.
2. Replace the battery.
3. After the scanner reboots, scan the barcode below to place the scanner in HID mode.

4. On the device, swipe down from the Status bar to open the Quick Access panel and then touch .
5. Touch **Bluetooth**.

6. Touch **Pair new device**. The device begins searching for discoverable Bluetooth devices in the area and displays them under **Available devices**.
7. Scroll through the list and select XXXXX xxxxxx, where XXXXX is the scanner and xxxxxx is the serial number.

   The device connects to the scanner, the scanner beeps once and **Connected** appears below the device name. The Bluetooth device is added to the **Paired devices** list and a trusted ("paired") connection is established.

DataWedge

DataWedge is a utility that adds advanced barcode scanning capability to any application without writing code. It runs in the background and handles the interface to built-in barcode scanners. The captured barcode data is converted to keystrokes and sent to the target application as if it was typed on the keypad.

DataWedge allows any app on the device to get data from input sources such as a barcode scanner, MSR, RFID, voice, or serial port and manipulate the data based on options or rules.

Configure DataWedge to:

- Provide data capture services from any app.
- Use a particular scanner, reader, or other peripheral devices.
- Properly format and transmit data to a specific app.

To configure DataWedge, refer to techdocs.zebra.com/datawedge/.

Enabling DataWedge

This procedure provides information on how to enable DataWedge on the device.

1. Swipe up from the bottom of the Home screen and touch .
2. Touch > **Settings**.
3. Touch the **DataWedge enabled** checkbox.

   A blue checkmark appears in the checkbox indicating that DataWedge is enabled.

Disabling DataWedge

This procedure provides information on how to disable DataWedge on the device.

1. Swipe up from the bottom of the Home screen and touch .
2. Touch .
3. Touch **Settings**.
4. Touch **DataWedge enabled**.

Supported Devices

This sections provides the supported decoders for each data capture option.

Camera Supported Decoders

Lists the supported decoders for the internal camera.

Table 15 Camera Supported Decoders

Decoder	Default State	Decoder	Default State	Decoder	Default State
Australian Postal	O	EAN8	X	MSI	O
Aztec	X	Grid Matrix	O	PDF417	X
Canadian Postal	O	GS1 DataBar	X	QR Code	X
Chinese 2 of 5	O	GS1 DataBar Expanded	X	Decoder Signature	O
Codabar	X	GS1 DataBar Limited	O	TLC 39	O
Code 11	O	GS1 Datamatrix	O	Trioptic 39	O
Code 128	X	GS1 QRCode	O	UK Postal	O
Code 39	X	HAN XIN	O	UPCA	X
Code 93	O	Interleaved 2 of 5	O	UPCE0	X
Composite AB	O	Japanese Postal	O	UPCE1	O
Composite C	O	Korean 3 of 5	O	US4state	O
Discrete 2 of 5	O	MAIL MARK	X	US4state FICS	O
Datamatrix	X	Matrix 2 of 5	O	US Planet	O
Dutch Postal	O	Maxicode	X	US Postnet	O
DotCode	X	MicroPDF	O		
EAN13	X	MicroQR	O		

Key: X = Enabled, O = Disabled, - = Not Supported

SE4100 Internal Imager Supported Decoders

Lists the supported decoders for the internal SE4100 imager.

Table 16 Internal SE4100 Imager Supported Decoders

Decoder	Default State	Decoder	Default State	Decoder	Default State
Australian Postal	O	EAN8	X	MSI	O

Table 16 Internal SE4100 Imager Supported Decoders (Continued)

Decoder	Default State	Decoder	Default State	Decoder	Default State
Aztec	X	Grid Matrix	O	PDF417	X
Canadian Postal	—	GS1 DataBar	X	QR Code	X
Chinese 2 of 5	O	GS1 DataBar Expanded	X	Decoder Signature	—
Codabar	X	GS1 DataBar Limited	X	TLC 39	O
Code 11	O	GS1 Datamatrix	O	Trioptic 39	O
Code 128	X	GS1 QRCode	—	UK Postal	O
Code 39	X	HAN XIN	O	UPCA	X
Code 93	O	Interleaved 2 of 5	X	UPCE0	X
Composite AB	O	Japanese Postal	O	UPCE1	O
Composite C	O	Korean 3 of 5	O	US4state	—
Discrete 2 of 5	O	MAIL MARK	O	US4state FICS	—
Datamatrix	X	Matrix 2 of 5	O	US Planet	O
Dutch Postal	—	Maxicode	O	US Postnet	O
DotCode	O	MicroPDF	O		
EAN13	X	MicroQR	X		

Key: X = Enabled, O = Disabled, - = Not Supported

RS507/RS507x Supported Decoders

Lists the supported decoders for the RS507/RS507x Ring Scanner.

Table 17 RS507/RS507x Supported Decoders

Decoder	Default State	Decoder	Default State	Decoder	Default State
Australian Postal	O	EAN8	X	MSI	O
Aztec	X	Grid Matrix	O	PDF417	X
Canadian Postal	-	GS1 DataBar	X	QR Code	X
Chinese 2 of 5	O	GS1 DataBar Expanded	X	Decoder Signature	O
Codabar	X	GS1 DataBar Limited	O	TLC 39	O
Code 11	O	GS1 Datamatrix	-	Trioptic 39	O

Table 17 RS507/RS507x Supported Decoders (Continued)

Decoder	Default State	Decoder	Default State	Decoder	Default State
Code 128	X	GS1 QRCode	-	UK Postal	O
Code 39	O	HAN XIN	-	UPCA	X
Code 93	O	Interleaved 2 of 5	O	UPCE0	X
Composite AB	O	Japanese Postal	O	UPCE1	O
Composite C	O	Korean 3 of 5	O	US4state	O
Discrete 2 of 5	O	MAIL MARK	-	US4state FICS	O
Datamatrix	X	Matrix 2 of 5	O	US Planet	O
Dutch Postal	O	Maxicode	X	US Postnet	O
DotCode	O	MicroPDF	O		
EAN13	X	MicroQR	O		

Key: X = Enabled, O = Disabled, - = Not Supported

RS5100 Supported Decoders

Lists the supported decoders for the RS5100 Ring Scanner.

Table 18 RS5100 Supported Decoders

Decoder	Default State	Decoder	Default State	Decoder	Default State
Australian Postal	O	EAN8	X	MSI	O
Aztec	X	Grid Matrix	O	PDF417	X
Canadian Postal	O	GS1 DataBar	X	QR Code	X
Chinese 2 of 5	O	GS1 DataBar Expanded	X	Decoder Signature	O
Codabar	X	GS1 DataBar Limited	O	TLC 39	O
Code 11	O	GS1 Datamatrix	O	Trioptic 39	O
Code 128	X	GS1 QRCode	O	UK Postal	O
Code 39	X	HAN XIN	O	UPCA	X
Code 93	O	Interleaved 2 of 5	O	UPCE0	X
Composite AB	O	Japanese Postal	O	UPCE1	O
Composite C	O	Korean 3 of 5	O	US4state	O
Discrete 2 of 5	O	MAIL MARK	X	US4state FICS	O

Table 18 RS5100 Supported Decoders (Continued)

Decoder	Default State	Decoder	Default State	Decoder	Default State
Datamatrix	X	Matrix 2 of 5	O	US Planet	O
Dutch Postal	O	Maxicode	X	US Postnet	O
DotCode	O	MicroPDF	O		
EAN13	X	MicroQR	O		

Key: X = Enabled, O = Disabled, - = Not Supported

RS6000 Supported Decoders

Lists the supported decoders for the RS6000 Ring Scanner.

Table 19 RS6000 Supported Decoders

Decoder	Default State	Decoder	Default State	Decoder	Default State
Australian Postal	O	EAN8	X	MSI	O
Aztec	X	Grid Matrix	O	PDF417	X
Canadian Postal	O	GS1 DataBar	X	QR Code	X
Chinese 2 of 5	O	GS1 DataBar Expanded	X	Decoder Signature	O
Codabar	X	GS1 DataBar Limited	O	TLC 39	O
Code 11	O	GS1 Datamatrix	O	Trioptic 39	O
Code 128	X	GS1 QRCode	O	UK Postal	O
Code 39	X	HAN XIN	O	UPCA	X
Code 93	O	Interleaved 2 of 5	O	UPCE0	X
Composite AB	O	Japanese Postal	O	UPCE1	O
Composite C	O	Korean 3 of 5	O	US4state	O
Discrete 2 of 5	O	MAIL MARK	X	US4state FICS	O
Datamatrix	X	Matrix 2 of 5	O	US Planet	O
Dutch Postal	O	Maxicode	X	US Postnet	O
DotCode	O	MicroPDF	O		
EAN13	X	MicroQR	O		

Key: X = Enabled, O = Disabled, - = Not Supported

DS3678 Supported Decoders

Lists the supported decoders for the DS3678 scanner.

Table 20 DS3678 Supported Decoders

Decoder	Default State	Decoder	Default State	Decoder	Default State
Australian Postal	O	EAN8	X	MSI	O
Aztec	X	Grid Matrix	O	PDF417	X
Canadian Postal	—	GS1 DataBar	X	QR Code	X
Chinese 2 of 5	O	GS1 DataBar Expanded	X	Decoder Signature	—
Codabar	X	GS1 DataBar Limited	O	TLC 39	O
Code 11	O	GS1 Datamatrix	O	Trioptic 39	O
Code 128	X	GS1 QRCode	O	UK Postal	O
Code 39	X	HAN XIN	O	UPCA	X
Code 93	O	Interleaved 2 of 5	O	UPCE0	X
Composite AB	O	Japanese Postal	O	UPCE1	O
Composite C	O	Korean 3 of 5	O	US4state	O
Discrete 2 of 5	O	MAIL MARK	X	US4state FICS	O
Datamatrix	X	Matrix 2 of 5	O	US Planet	O
Dutch Postal	O	Maxicode	X	US Postnet	O
DotCode	O	MicroPDF	O		
EAN13	X	MicroQR	O		

Key: X = Enabled, O = Disabled, — = Not Supported

LI3678 Supported Decoders

Lists the supported decoders for the LI3678 scanner.

Table 21 LI3678 Supported Decoders

Decoder	Default State	Decoder	Default State	Decoder	Default State
Australian Postal	—	EAN8	X	MSI	O
Aztec	—	Grid Matrix	O	PDF417	—
Canadian Postal	—	GS1 DataBar	X	QR Code	—

Table 21 LI3678 Supported Decoders (Continued)

Decoder	Default State	Decoder	Default State	Decoder	Default State
Chinese 2 of 5	O	GS1 DataBar Expanded	X	Decoder Signature	—
Codabar	X	GS1 DataBar Limited	O	TLC 39	O
Code 11	O	GS1 Datamatrix	—	Trioptic 39	O
Code 128	X	GS1 QRCode	—	UK Postal	—
Code 39	X	HAN XIN	O	UPCA	X
Code 93	O	Interleaved 2 of 5	O	UPCE0	X
Composite AB	—	Japanese Postal	—	UPCE1	O
Composite C	—	Korean 3 of 5	O	US4state	—
Discrete 2 of 5	O	MAIL MARK	—	US4state FICS	—
Datamatrix	—	Matrix 2 of 5	O	US Planet	—
Dutch Postal	—	Maxicode	—	US Postnet	—
DotCode	O	MicroPDF	—		
EAN13	X	MicroQR	—		

Key: X = Enabled, O = Disabled, — = Not Supported

Wireless

This section provides information on the wireless features of the device

- Wireless Local Area Network (WLAN)
- Wireless Wide Area Network (WWAN)
- Bluetooth
- Cast
- Near Field Communications (NFC)

Wireless Local Area Networks

Wireless local area networks (WLANs) allow the device to communicate wirelessly inside a building. Before using the device on a WLAN, the facility must be set up with the required hardware to run the WLAN (sometimes known as infrastructure). The infrastructure and the device must both be properly configured to enable this communication.

Refer to the documentation provided with the infrastructure (access points (APs), access ports, switches, Radius servers, etc.) for instructions on how to set up the infrastructure.

Once the infrastructure is set up to enforce the chosen WLAN security scheme, use the **Wireless & networks** settings configure the device to match the security scheme.

The device supports the following WLAN security options:

- None
- Enhanced Open
- Open
- Wireless Equivalent Privacy (WEP)
- Wi-Fi Protected Access (WPA)/WPA2 Personal (PSK)
- WPA3-Personal

- WPA/WPA2/WPA3 Enterprise (EAP)
  - Lightweight Extensible Authentication Protocol (LEAP) - Only available with mDNA Enterprise Bundle upgrade.
  - Protected Extensible Authentication Protocol (PEAP) - with MSCHAPV2 and GTC authentication.
  - Transport Layer Security (TLS)
  - Tunneled Transport Layer Security (TTLS) - with Password Authentication Protocol (PAP), MSCHAP and MSCHAPv2 authentication.
  - Flexible Authentication via Secure Tunneling (EAP-FAST) - with MSCHAPV2 and GTC authentication.
  - Password (PWD).
  - Lightweight Extensible Authentication Protocol (LEAP).
- WPA3-Enterprise 192-bit

The **Status** bar displays icons that indicate Wi-Fi network availability and Wi-Fi status.

NOTE: To extend the life of the battery, turn off Wi-Fi when not in use.

Connecting to a Wi-Fi Network

1. Go to **Settings**.
2. Touch **Network & internet**.
3. Touch **Wi-Fi** to open the **Wi-Fi** screen. The device searches for WLANs in the area and lists them.
4. Scroll through the list and select the desired WLAN network.
5. For open networks, touch profile once or press and hold and then select **Connect** or for secure networks enter the required password or other credentials then touch **Connect**. See the system administrator for more information.

   The device obtains a network address and other required information from the network using the dynamic host configuration protocol (DHCP) protocol. To configure the device with a fixed internet protocol (IP) address, see Configuring the Device to Use a Static IP Address on page 98.
6. In the Wi-Fi setting field, **Connected** appears indicating that the device is connected to the WLAN.

Removing a Wi-Fi Network

Remove a remembered or connected Wi-Fi network.

1. Go to **Settings**.
2. Touch **Network & Internet** > **Wi-Fi**.
3. Scroll down to the bottom of the list and touch **Saved networks**.
4. Touch the name of the network.
5. Touch **FORGET**.

WLAN Configuration

This section provides information on configuring Wi-Fi settings.

Configuring a Secure Wi-Fi Network

1. Go to **Settings**.
2. Touch **Network & Internet** > **Wi-Fi**.
3. Slide the switch to the **ON** position.
4. The device searches for WLANs in the area and lists them on the screen.
5. Scroll through the list and select the desired WLAN network.
6. Touch the desired network. If network security is **Open**, the device automatically connects to the network. For all other network security, a dialog box appears.
7. If network security is **WPA/WPA2-Personal**, or **WEP**, enter the required password and then touch **Connect**.
8. If network security is **WPA/WPA2-Personal**, **WPA3-Personal**, or **WEP**, enter the required password and then touch **Connect**.
9. If network security is **WPA/WPA2/WPA3 Enterprise**:
   a) Touch the **EAP method** drop-down list and select one of the following:
      - **PEAP**
      - **TLS**
      - **TTLS**
      - **PWD**
      - **SIM**
      - **AKA**
      - **AKA'**
      - **LEAP**

   b) Fill in the appropriate information. Options vary depending on the **EAP method** chosen.
      - When selecting **CA certificate**, Certification Authority (CA) certificates are installed using the **Security** settings.
      - When using the EAP methods PEAP, TLS, or TTLS, specify a domain.
      - Touch **Advanced options** to display additional network options.
10. If the network security is **WPA3-Enterprise 192-bit**:
    - Touch **CA certificate** and select a Certification Authority (CA) certificate. Note: Certificates are installed using the Security settings.
    - Touch **User certificate** and select a user certificate. Note: User certificates are installed using the Security settings.
    - In the **Identity** text box, enter the username credentials.

NOTE: By default, the network Proxy is set to None and the IP settings is set to DHCP. See Configuring for a Proxy Server on page 97 for setting the connection to a proxy server and see Configuring the Device to Use a Static IP Address on page 98 for setting the device to use a static IP address.

11. Touch **Connect**.

Manually Adding a Wi-Fi Network

Manually add a Wi-Fi network if the network does not broadcast its name (SSID) or to add a Wi-Fi network when out of range.

1. Go to **Settings**.
2. Touch **Network & Internet** > **Wi-Fi**.
3. Slide the Wi-Fi switch to the **On** position.
4. Scroll to the bottom of the list and select **Add network**.
5. In the **Network name** text box, enter the name of the Wi-Fi network.
6. In the **Security** drop-down list, set the type of security to:
   - **None**
   - **Enhanced Open**
   - **WEP**
   - **WPA/WPA2-Personal**
   - **WPA3-Personal**
   - **WPA/WPA2/WPA3-Enterprise**
   - **WPA3-Enterprise 192-bit**
7. If the network security is **None** or **Enhanced Open**, touch **Save**.
8. If the network security is **None**, touch **Save**.
9. If the network security is **WEP**, **WPA3-Personal**,or **WPA/WPA2-Personal**, enter the required password and then touch **Save**.
10. If the network security is **WEP** or **WPA/WPA2-Personal**, enter the required password and then touch **Save**.

NOTE: By default, the network Proxy is set to None and the IP settings is set to DHCP. See Configuring for a Proxy Server on page 97 for setting the connection to a proxy server and see Configuring the Device to Use a Static IP Address on page 98 for setting the device to use a static IP address.

11. If network security is **WPA/WPA2/WPA3 Enterprise**:
    a) Touch the **EAP method** drop-down list and select one of the following:
        - **PEAP**
        - **TLS**
        - **TTLS**
        - **PWD**
        - **SIM**
        - **AKA**
        - **AKA'**
        - **LEAP**
    b) Fill in the appropriate information. Options vary depending on the **EAP method** chosen.
        - When selecting **CA certificate**, Certification Authority (CA) certificates are installed using the **Security** settings.
        - When using the EAP methods PEAP, TLS, or TTLS, specify a domain.
        - Touch **Advanced options** to display additional network options.
12. If the network security is WPA3-Enterprise 192-bit:
    - Touch **CA certificate** and select a Certification Authority (CA) certificate. Note: Certificates are installed using the Security settings.
    - Touch **User certificate** and select a user certificate. Note: User certificates are installed using the Security settings.
    - In the **Identity** text box, enter the username credentials.
13. Touch **Save**. To connect to the saved network, touch and hold on the saved network and select **Connect to network**.

Configuring for a Proxy Server

A proxy server is a server that acts as an intermediary for requests from clients seeking resources from other servers. A client connects to the proxy server and requests some service, such as a file, connection, web page, or other resource, available from a different server. The proxy server evaluates the request according to its filtering rules. For example, it may filter traffic by IP address or protocol. If the request is validated by the filter, the proxy provides the resource by connecting to the relevant server and requesting the service on behalf of the client.

It is important for enterprise customers to be able to set up secure computing environments within their companies, making proxy configuration essential. Proxy configuration acts as a security barrier ensuring that the proxy server monitors all traffic between the Internet and the intranet. This is normally an integral part of security enforcement in corporate firewalls within intranets.

1. Go to **Settings**.
2. Touch **Network & Internet** > **Wi-Fi** .
3. Slide the Wi-Fi switch to the **On** position.
4. In the network dialog box, select and touch a network.

5. If configuring the connected network, touch ✎ to edit the network details and then touch the down arrow to hide the keyboard.
6. Touch **Advanced options**.
7. Touch **Proxy** and select **Manual**.
8. In the **Proxy hostname** text box, enter the address of the proxy server.
9. In the **Proxy port** text box, enter the port number for the proxy server.
10. In the **Bypass proxy for** text box, enter addresses for web sites that are not required to go through the proxy server. Use a comma "," between addresses. Do not use spaces or carriage returns between addresses.
11. If configuring the connected network, touch **Save** otherwise, touch **Connect**.
12. Touch **Connect**.

Configuring the Device to Use a Static IP Address

By default, the device is configured to use Dynamic Host Configuration Protocol (DHCP) to assign an Internet protocol (IP) address when connecting to a wireless network.

1. Go to **Settings**.
2. Touch **Network & Internet** > **Wi-Fi**.
3. Slide the Wi-Fi switch to the **On** position.
4. In the network dialog box, select and touch a network.
5. If configuring the connected network, touch ✎ to edit the network details and then touch the down arrow to hide the keyboard.
6. Touch **Advanced options**.
7. Touch **IP settings** and select **Static**.
8. In the **IP address** text box, enter an IP address for the device.
9. If required, in the **Gateway** text box, enter a gateway address for the device.
10. If required, in the **Network prefix length** text box, enter the prefix length.
11. If required, in the **DNS 1** text box, enter a Domain Name System (DNS) address.
12. If required, in the **DNS 2** text box, enter a DNS address.
13. If configuring the connected network, touch **Save** otherwise, touch **Connect**.

Wi-Fi Preferences

Use the Wi-Fi preferences to configure advanced Wi-Fi settings. From the Wi-Fi screen, scroll down to the bottom of the screen and touch Wi-Fi preferences.

- **Turn on Wi-Fi automatically** - When enabled, Wi-Fi automatically turns back on when near high-quality saved networks.
- **Open network notification** - When enabled, notifies the user when an open network is available.
- **Notify for public network** - When enabled, notifies the user when an open network is available.

- **Advanced** - Touch to expand options.
  - **Additional settings** - Touch to view additional Wi-Fi settings.
  - **Install Certificates** – Touch to install certificates.
  - **Network rating provider** - Disabled (AOSP devices). To help determine what constitutes a good Wi-Fi network, Android supports external Network rating providers that provide information about the quality of open Wi-Fi networks. Select one of the providers listed or **None**. If none are available or selected, the Connect to open networks feature is disabled.
  - **Wi-Fi Direct** - Displays a list of devices available for a direct Wi-Fi connection.

Additional Wi-Fi Settings

Use the Additional Settings to configure additional Wi-Fi settings. To view the additional Wi-Fi settings, scroll to the bottom of the Wi-Fi screen and touch **Wi-Fi Preferences** > **Advanced** > **Additional settings**.

NOTE: Additional Wi-Fi settings are for the device, not for a specific wireless network.

- **Regulatory**
  - **Country Selection** - Displays the acquired country code if 802.11d is enabled, else it displays the currently selected country code.
  - **Region code** - Displays the current region code.
- **Band and Channel Selection**
  - **Wi-Fi frequency band** - Set the frequency band to: **Auto** (default), **5 GHz only** or **2.4 GHz only**.
  - **Available channels (2.4 GHz)** - Touch to display the **Available channels** menu. Select specific channels and touch **OK**. Only available with mDNA Enterprise Bundle upgrade.
  - **Available channels (5 GHz)** - Touch to display the **Available channels** menu. Select specific channels and touch **OK**. Only available with mDNA Enterprise Bundle upgrade.
- **Logging**
  - **Advanced Logging** – Touch to enable advanced logging or change the log directory.
  - **Wireless logs** - Use to capture Wi-Fi log files.
    - **Fusion Logger** - Touch to open the **Fusion Logger** application. This application maintains a history of high level WLAN events which helps to understand the status of connectivity. Only available with mDNA Enterprise Bundle upgrade.
    - **Fusion Status** - Touch to display live status of WLAN state. Also provides information about the device and connected profile. Only available with mDNA Enterprise Bundle upgrade.
- **About**
  - **Version** - Displays the current version information. Touch the version to display addition version details.

Wi-Fi Direct

Wi-Fi Direct devices can connect to each other without having to go through an access point. Wi-Fi Direct devices establish their own ad-hoc network when required, letting you see which devices are available and choose which one you want to connect to.

1. Go to **Settings**.

2. Touch **Network & Internet** > **Wi-Fi**.
3. Slide the **Wi-Fi** switch to the **On** position.
4. In the network dialog box, select and touch a network.
5. Scroll down to the bottom of the screen and touch **Wi-Fi preferences** > **Advanced** > **Wi-Fi Direct**. The device begins searching for another Wi-Fi Direct device.
6. Under **Peer devices**, touch the other device name.
7. On the other device, select **Accept**.

   Connected appears on the device. On both devices, in their respective Wi-Fi Direct screens, the other device name appears in the list.

Wireless Wide Area Networks

Use Wireless wide area networks (WWANs) to access data over a cellular network.

NOTE: MC2700 only.

This section provides information on:

- Sharing a data connection
- Monitoring data usage
- Changing Cellular Network settings

Sharing the Mobile Data Connection

The **Tethering & Portable Hotspot** settings allow sharing the mobile data connection with a single computer via USB tethering or Bluetooth tethering.

Share the data connection with up to eight devices at once, by turning it into a portable Wi-Fi hotspot. While the device is sharing its data connection, an icon displays at the top of the screen and a corresponding message appears in the notification list.

Enabling USB Tethering

NOTE: USB tethering is not supported on computers running Mac OS. If the computer is running Windows or a recent version of Linux (such as Ubuntu), follow these instructions without any special preparation. If running a version of Windows that precedes Windows 7, or some other operating system, you may need to prepare the computer to establish a network connection via USB.

1. Connect the device to a host computer with a USB cable.

   The notification **Charging this device via USB** appears in the Notifications panel.
2. Go to **Settings**.
3. Touch **Network & Internet**.
4. Touch **Hotspot & tethering**.
5. Touch the **USB tethering** switch to enable.

The host computer is now sharing the device's data connection.

To stop sharing the data connection, touch the **USB tethering** switch again or disconnect the USB cable.

Enabling Bluetooth Tethering

Use Bluetooth tethering to share the data connection with a host computer.

Configure the host computer to obtain its network connection using Bluetooth. For more information, see the host computer's documentation.

1. Pair the device with the host computer.
2. Go to **Settings**.
3. Touch **Networking & Internet**.
4. Touch **Advanced**.
5. Touch **Hotspot & tethering**.
6. Touch the **Bluetooth tethering** switch to enable.

The host computer is now sharing the device's data connection.

To stop sharing the data connection, touch the **Bluetooth tethering** switch again.

Enabling Wi-Fi Hotspot

1. Go to **Settings**.
2. Touch **Networking & Internet**.
3. Touch **Hotspot & tethering**.
4. Touch **Wi-Fi hotspot**.
5. Toggle the switch to enable.

After a moment, the device starts broadcasting its Wi-Fi network name (SSID). Connect to it with up to eight computers or other devices. The Hotspot icon appears in the Status bar.

To stop sharing the data connection, touch the toggle switch again.

Configuring the Wi-Fi Hotspot

1. Go to **Settings**.
2. Touch **Networking & Internet**.
3. Touch **Hotspot & tethering**.
4. Touch **Wi-Fi hotspot**.
5. In the **Hotspot** name text field, edit the name for the hotspot.

6. Touch **Security** and select a security method from the drop-down list.
   - **WPA3-Personal**
     a. Touch **Hotspot password**.
     b. Enter a password.
     c. Touch **OK**.
   - **WPA2-Personal**
     a. Touch **Hotspot password**.
     b. Enter a password.
     c. Touch **OK**.
   - **None** - If **None** is selected in the Security option, a password is not required.
7. Touch **Advanced**.
8. In the **AP Band** drop-down list, select **2.4 GHz Band** or **5.0 GHz Band**.
9. If desired, touch **Turn off hotspot automatically** to turn off Wi-Fi Hotspot when no devices are connected.

Data Usage

Data usage refers to the amount of data uploaded or downloaded by the device during a given period. Depending on the wireless plan, you may be charged additional fees when your data usage exceeds your plan's limit.

Data usage settings allow:

- Enable Data Saver.
- Set the data usage warning level.
- Set a data usage limit.
- View or restrict data usage by app.
- Identify mobile hotspots and restrict background downloads that may result in extra charges.

Monitoring Data Usage

1. Go to **Settings**.
2. Touch **Network & internet** > **Mobile network** > **Data usage**.

CAUTION: The usage displayed on the data usage settings screen is measured by your device. Your carrier's data usage accounting may differ. Usage in excess of your carrier plan's data limits can result in steep overage charges. The feature described here can help you track your usage, but is not guaranteed to prevent additional charges.

By default, the data usage settings screen displays the mobile data settings. That is, the data network or networks provided by your carrier.

Setting Data Usage Warning

Set a warning alert when the device has used a certain amount of mobile data.

1. Go to **Settings**.
2. Touch **Network & internet** > **Mobile network** > **Data usage** > ⚙.
3. If necessary, touch **Set data warning** to enable it.
4. Touch **Data warning**.
5. Enter a number.

   To switch between megabytes (MB) and gigabytes (GB), touch the down arrow.
6. Touch **SET**.

When the data usage reaches the set level, a notification appears.

Setting Data Limit

1. Go to **Settings**.
2. Touch **Network & internet** > **Mobile network** > **Data usage** > ⚙.
3. Touch **Set data limit**.
4. Touch **OK**.
5. Touch **Data limit**.
6. Enter a number.

   To switch between megabytes (MB) and gigabytes (GB), touch the down arrow.
7. Touch **Set**.

When the limit is reached, data automatically turns off and a notification appears.

Cellular Network Settings

Cellular network settings applies to WWAN devices only.

Data When Roaming

Roaming is disabled by default to prevent the device from transmitting data over other carriers' mobile networks when leaving an area that is covered by the carrier's networks. This is useful for controlling expenses if the service plan does not include data roaming.

Setting Preferred Network Type

Change the network operating mode.

1. Go to **Settings**.
2. Touch **Network & Internet** > **Mobile network** > **Advanced** > **Preferred network type**.

3. In the **Preferred network type** dialog box, select a mode to set as default.
   - Automatic (LWG)
   - LTE only
   - 3G only
   - 2G only
   - Automatic
   - CDMA only

Setting Preferred Network

Change the network operating mode.

1. Go to **Settings**.
2. Touch **Network & Internet** > **Mobile network** > **Advanced**.
3. Touch **Automatically select network**.
4. Touch **Network**.
5. In the **Available network** list, select a carrier network.

Using Search for MicroCell

A MicroCell acts like a mini cell tower in a building or residence and connects to an existing broadband Internet service. It improves cell signal performance for voice calls, texts, and cellular data applications like picture messaging and Web surfing.

1. Go to **Settings**.
2. Touch **Network & Internet** > **Mobile network**.
3. Touch **Search for MicroCell**.

Configuring the Access Point Name

To use the data on a network, configure the APN information.

NOTE: Many service provider Access Point Name (APN) data are pre-configured in the device. The APN information for all other service provides must be obtained from the wireless service provider.

1. Go to **Settings**.
2. Touch **Network & Internet** > **Mobile network** > **Advanced**.
3. Touch **Access Point Names**.
4. Touch an APN name in the list to edit an existing APN or touch **+** to create a new APN.
5. Touch each APN setting and enter the appropriate data obtained from the wireless service provider.
6. When finished, touch ⋮ > **Save**.
7. Touch the radio button next to the APN name to start using it.

Locking the SIM Card

Locking the SIM card requires the user to enter a PIN every time the device is turned on. If the correct PIN is not entered, only emergency calls can be made.

1. Go to **Settings**.
2. Touch **Security** > **SIM card lock**.
3. Touch **Lock SIM card**.
4. Enter the PIN associated with the card.
5. Touch **OK**.
6. Reset the device.

Default SIM Slot Configuration

The device contains SIM slots that can be used for installing up to two SIM cards (one physical SIM and one eSIM (optional)). A system administrator can set the default SIM slot for the device.

By default, SIM slot configuration is disabled. To allow SIM slot configuration on the device, use Zebra's staging solution, StageNow, to enable the SIM Socket Selection parameter. See techdocs.zebra.com/stagenow.

Setting the Default SIM Slot

1. Go to **Settings**.
2. Touch **About phone** > **SW components**.
3. Touch **WWAN** five times.

   The message **Turn ON SIM Slot UI** appears.
4. Touch Back two times.
5. Touch **Network & Internet** > **Mobile network** > **Advanced** > **SIM socket selection**.
6. Select the SIM slot to set as the default.

Dual SIM Dual Standby

Dual SIM Dual Standby mode allows a device with two SIM cards to make or receive calls using either SIM card. Both SIM cards remain active while not in use. When a call is initiated using one SIM card, the other SIM card becomes inactive until the call ends.

Dual SIM Dual Standby mode is disabled by default. To activate Dual SIM Dual Standby mode, use Zebra's staging solution, StageNow. For more information, refer to: zebra.com/stagenow.

Bluetooth

Bluetooth devices can communicate without wires, using frequency-hopping spread spectrum (FHSS) radio frequency (RF) to transmit and receive data in the 2.4 GHz Industry Scientific and Medical (ISM) band (802.15.1). Bluetooth wireless technology is specifically designed for short-range (10 m (32.8 ft)) communication and low power consumption.

Devices with Bluetooth capabilities can exchange information (for example, files, appointments, and tasks) with other Bluetooth enabled devices such as printers, access points, and other mobile devices.

The device supports Bluetooth Low Energy. Bluetooth Low Energy is targeted at applications in the healthcare, fitness, security, and home entertainment industries. It provides reduced power consumption and cost while maintaining standard Bluetooth range.

Adaptive Frequency Hopping

Adaptive Frequency Hopping (AFH) is a method of avoiding fixed frequency interferers, and can be used with Bluetooth voice. All devices in the piconet (Bluetooth network) must be AFH-capable in order for AFH to work. There is no AFH when connecting and discovering devices. Avoid making Bluetooth connections and discoveries during critical 802.11b communications.

- Channel Classification - A method of detecting an interference on a channel-by-channel basis, or pre-defined channel mask.
- Link Management - Coordinates and distributes the AFH information to the rest of the Bluetooth network.
- Hop Sequence Modification - Avoids interference by selectively reducing the number of hopping channels.
- Channel Maintenance - A method for periodically re-evaluating the channels.

When AFH is enabled, the Bluetooth radio “hops around” (instead of through) the 802.11b high-rate channels. AFH coexistence allows enterprise devices to operate in any infrastructure.

The Bluetooth radio in this device operates as a Class 2 device power class. The maximum output power is 2.5 mW and the expected range is 10 m (32.8 ft). A definition of ranges based on power class is difficult to obtain due to power and device differences, and whether in open space or closed office space.

NOTE: It is not recommended to perform Bluetooth wireless technology inquiry when high rate 802.11b operation is required.

Security

The current Bluetooth specification defines security at the link level. Application-level security is not specified. This allows application developers to define security mechanisms tailored to their specific need. Link-level security occurs between devices, not users, while application-level security can be implemented on a per-user basis. The Bluetooth specification defines security algorithms and procedures required to authenticate devices, and if needed, encrypt the data flowing on the link between the devices. Device authentication is a mandatory feature of Bluetooth while link encryption is optional.

Pairing of Bluetooth devices is accomplished by creating an initialization key used to authenticate the devices and create a link key for them. Entering a common personal identification number (PIN) in the devices being paired generates the initialization key. The PIN is never sent over the air. By default, the Bluetooth stack responds with no key when a key is requested (it is up to user to respond to the key request event). Authentication of Bluetooth devices is based-upon a challenge-response transaction. Bluetooth allows for a PIN or passkey used to create other 128-bit keys used for security and encryption. The encryption key is derived from the link key used to authenticate the pairing devices. Also worthy of note is the limited range and fast frequency hopping of the Bluetooth radios that makes long-distance eavesdropping difficult.

Recommendations are:

- Perform pairing in a secure environment
- Keep PIN codes private and do not store the PIN codes in the device
- Implement application-level security.

Bluetooth Profiles

The device supports the Bluetooth services listed.

Table 22 Bluetooth Profiles

Profile	Description
Service Discovery Protocol (SDP)	Handles the search for known and specific services as well as general services.
Serial Port Profile (SPP)	Allows use of RFCOMM protocol to emulate serial cable connection between two Bluetooth peer devices. For example, connecting the device to a printer.
Object Push Profile (OPP)	Allows the device to push and pull objects to and from a push server.
Advanced Audio Distribution Profile (A2DP)	Allows the device to stream stereo-quality audio to a wireless headset or wireless stereo speakers.
Audio/Video Remote Control Profile (AVRCP)	Allows the device to control A/V equipment to which a user has access. It may be used in concert with A2DP.
Personal Area Network (PAN)	Allows the use of Bluetooth Network Encapsulation Protocol to provide L3 networking capabilities over a Bluetooth link. Only PANU role is supported.
Human Interface Device Profile (HID)	Allows Bluetooth keyboards, pointing devices, gaming devices and remote monitoring devices to connect to the device.
Headset Profile (HSP)	Allows a hands-free device, such as a Bluetooth headset, to place and receive calls on the device.
Hands-Free Profile (HFP)	Allows car hands-free kits to communicate with the device in the car.
Phone Book Access Profile (PBAP)	Allows exchange of Phone Book Objects between a car kit and a mobile device to allow the car kit to display the name of the incoming caller; allow the car kit to download the phone book so you can initiate a call from the car display.
Out of Band (OOB)	Allows exchange of information used in the pairing process. Pairing is completed using the Bluetooth radio, but requires information from the OOB mechanism. Using OOB with NFC enables pairing when devices simply get close, rather than requiring a lengthy discovery process.
Symbol Serial Interface (SSI)	Allows for communication with Bluetooth Imager.
Generic Attribute Profile (GATT)	Provides profile discovery and description services for Bluetooth Low Energy protocol. It defines how attributes are grouped together into sets to form services.
Dial Up Networking (DUN)	Provides a standard to access the Internet and other dial-up services over Bluetooth.
HID Over GATT Profile (HOGP)	Defines the procedures and features used by Bluetooth low energy HID Devices using GATT and Bluetooth HID Hosts using GATT.
OBject EXchange (OBEX)	Facilitates the exchange of binary objects between devices.

Bluetooth Power States

The Bluetooth radio is off by default.

- **Suspend** - When the device goes into Sleep mode, the Bluetooth radio stays on.
- **Airplane Mode** -
  - Android A10 OS version and previous versions - When the device is placed in Airplane Mode, the Bluetooth radio turns off. When Airplane mode is disabled, the Bluetooth radio returns to the prior state. When in Airplane Mode, the Bluetooth radio can be turned back on if desired.
  - Android A11 OS version and versions onward - When the device is placed in Airplane Mode, the Bluetooth radio is not turned off when the device is connected to a Bluetooth headset or hearing device.
- **Airplane Mode** - When the device is placed in Airplane Mode, the Bluetooth radio is not turned off when the device is connected to a Bluetooth headset or hearing device.

Bluetooth Radio Power

Turn off the Bluetooth radio to save power or if entering an area with radio restrictions (for example, an airplane). When the radio is off, other Bluetooth devices cannot see or connect to the device. Turn on the Bluetooth radio to exchange information with other Bluetooth devices (within range). Communicate only with Bluetooth radios in close proximity.

NOTE: To achieve optimal battery life, turn off radios when not in use.

Enabling Bluetooth

1. Swipe down from the Status bar to open the Notification panel.
2. Touch to turn Bluetooth on.

Disabling Bluetooth

1. Swipe down from the Status bar to open the Notification panel.
2. Touch to turn Bluetooth off.

Discovering Bluetooth Device(s)

The device can receive information from discovered devices without pairing. However, once paired, the device and a paired device exchange information automatically when the Bluetooth radio is on.

1. Ensure that Bluetooth is enabled on both devices.
2. Ensure that the Bluetooth device to discover is in discoverable mode.
3. Ensure that the two devices are within 10 meters (32.8 feet) of one another.
4. Swipe down from the Status bar to open the Quick Access panel.
5. Touch and hold **Bluetooth**.
6. Touch **Pair new device**. The device begins searching for discoverable Bluetooth devices in the area and displays them under **Available devices**.

7. Scroll through the list and select a device. The Bluetooth pairing request dialog box appears.
8. Touch **Pair** on both devices.
9. The Bluetooth device is added to the **Paired devices** list and a trusted (“paired”) connection is established.

Changing the Bluetooth Name

By default, the device has a generic Bluetooth name that is visible to other devices when connected.

1. Go to **Settings**.
2. Touch **Connected devices** > **Connection preferences** > **Bluetooth**.
3. If Bluetooth is not on, move the switch to turn Bluetooth on.
4. Touch **Device name**.
5. Enter a name and touch **RENAME**.

Connecting to a Bluetooth Device

Once paired, connect to a Bluetooth device.

1. Go to **Settings**.
2. Touch **Connected devices** > **Connection preferences** > **Bluetooth**.
3. In the list, touch the unconnected Bluetooth device.

   When connected, **Connected** appears below the device name.

Selecting Profiles on the Bluetooth Device

Some Bluetooth devices have multiple profiles.

1. Go to **Settings**.
2. Touch **Connected devices** > **Connection preferences** > **Bluetooth** .
3. In the **Paired Devices** list, touch ⚙ next to the device name.
4. Turn on or off a profile to allow the device to use that profile.

Unpairing a Bluetooth Device

Unpairing a Bluetooth device erases all pairing information.

1. Go to **Settings**.
2. Touch **Connected devices** > **Connection preferences** > **Bluetooth**.
3. In the **Paired Devices** list, touch ⚙ next to the device name.
4. Touch **FORGET**.

Cast

Use **Cast** to mirror the device screen on a Miracast enabled wireless display.

1. Go to **Settings**.
2. Touch **Connected devices** > **Connection preferences** > **Cast**.
3. Touch ⋮ > **Enable wireless display**.

   The device searches for nearby Miracast devices and lists them.
4. Touch a device to begin casting.

Near Field Communications

NFC/HF RFID is a short-range wireless connectivity technology standard that enables a secure transaction between a reader and a contactless smart card.

The technology is based on ISO/IEC 14443 type A and B (proximity), and ISO/IEC 15693 (vicinity) standards, using the HF 13.56 MHz unlicensed band.

The device supports the following operating modes:

- Reader mode
- Card Emulation mode.

Using NFC, the device can:

- Read contactless cards, such as contactless tickets, ID cards, and ePassport.
- Read and write information to contactless cards, such as SmartPosters and tickets, as well as devices with an NFC interface, such as vending machines.
- Read information from supported medical sensors.
- Pair with supported Bluetooth devices such as printers, ring scanners (for example, RS6000), and headsets (for example, HS3100).
- Exchange data with another NFC device.
- Emulate contactless card such as ticket or SmartPoster.

The device's NFC antenna is positioned to read NFC cards from the top of the device while the device is being held.

Reading NFC Cards

Read contactless cards using NFC.

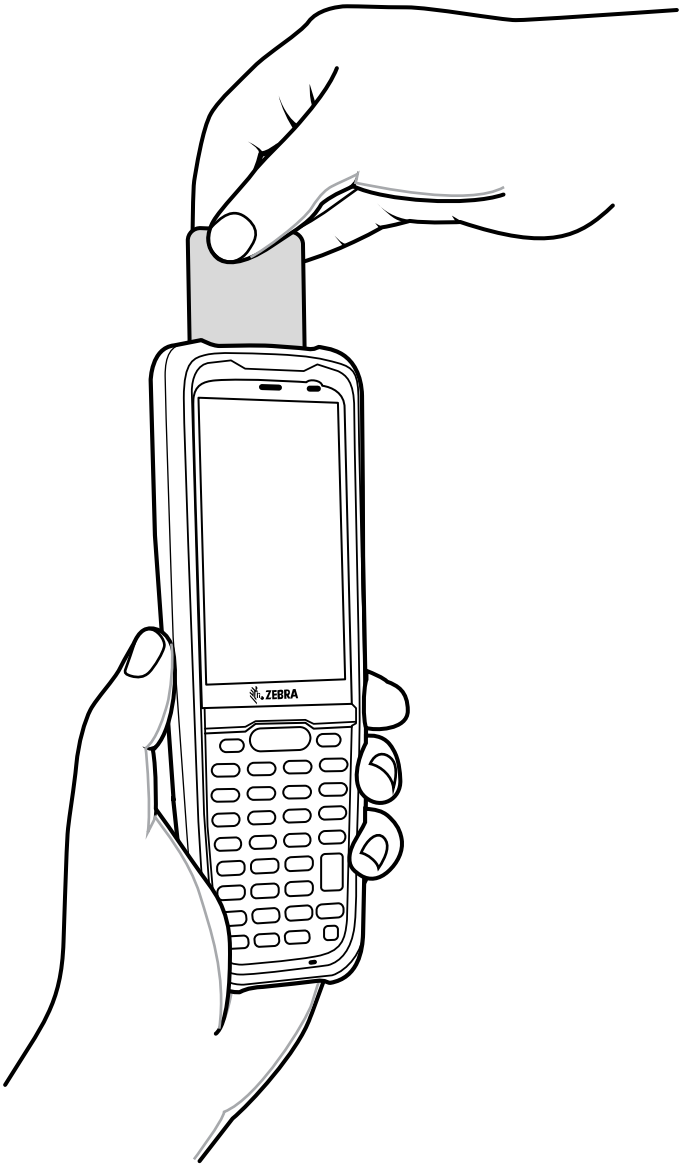

1. Launch an NFC enabled application.
2. Hold device as shown.
3. Move the device close to the NFC card until it detects the card.
4. Hold the card steadily until the transaction is complete (usually indicated by the application).

Sharing Information Using NFC

You can beam content like a web page, contact cards, pictures, YouTube links, or location information from your screen to another device by bringing the devices together back to back.

1. Open a screen that contains a web page, video, photo or contact.

2. Move the front of the device toward the front of the other device.

   When the devices connect, a sound emits, the image on the screen reduces in size, the message **Touch to beam** displays.

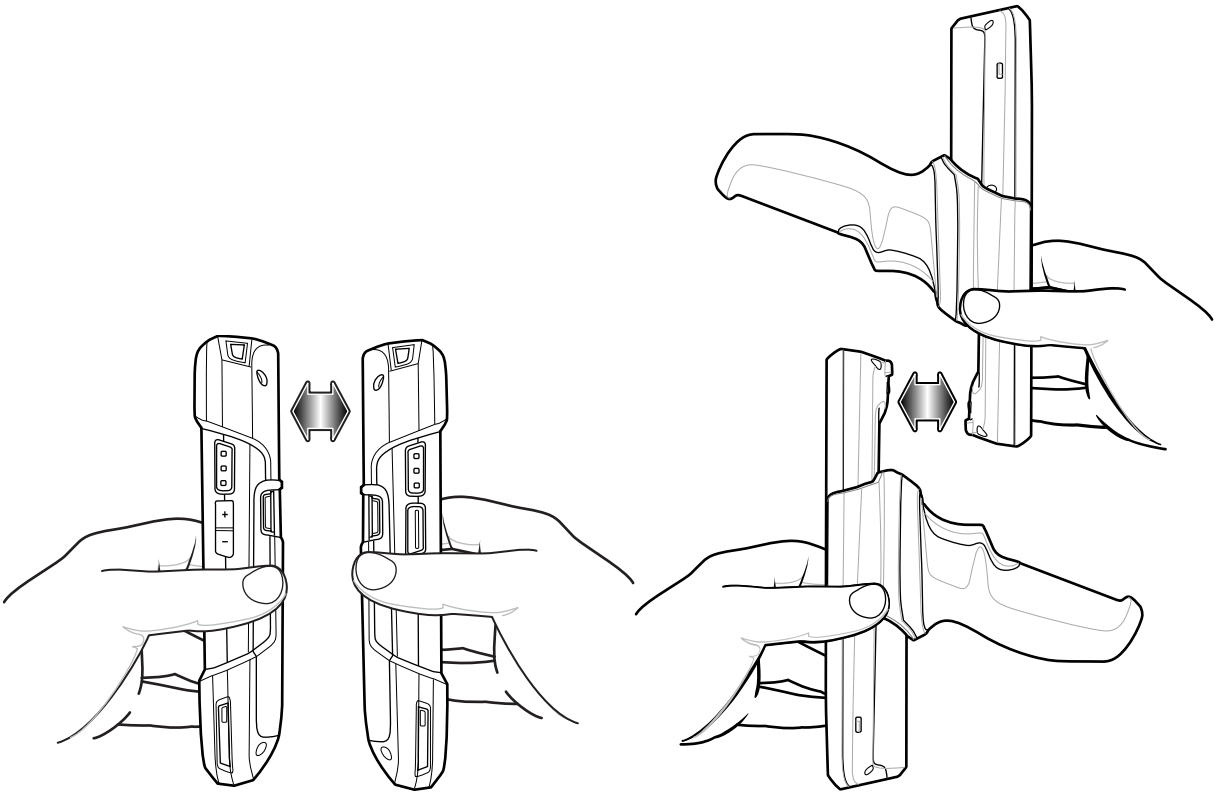

3. Touch anywhere on the screen.

   The transfer begins.

Enterprise NFC Settings

Improve NFC performance or increase battery life by selecting which NFC features to use on the device.

- **Card Detection Mode** - Select a card detection mode.
  - **Low** - Increases battery life by lowering the NFC detection speed.
  - **Hybrid** - Provides a balance between NFC detection speed and battery life (default).
  - **Standard** - Provides the optimal NFC detection speed, but reduces battery life.

- **Supported Card Technology** - Select an option to detect only one NFC tag type, increasing battery life, but reducing detection speed.
  - **All (Default)** - Detects all NFC tag types.
  - **All (Default)** - Detects all NFC tag types. This provides the best detection speed, but reduces battery life.
  - **ISO 14443 Type A**
  - **ISO 14443 Type B**
  - **FeliCa**
  - **ISO 15693**
- **NFC Debug Logging** - Use to enable or disable debug logging for NFC.
- **Other NFC settings available with Zebra administrator tools (CSP)** - Allows configuration of additional Enterprise NFC Settings through staging tools and Mobile Device Management (MDM) solutions with an MX version that supports the Enterprise NFC Settings Configuration Service Provider (CSP). For more information on using the Enterprise NFC Settings CSP, refer to: techdocs.zebra.com.

Accessories

This section provides information for using the accessories for the device.

Device Accessories

This table lists the accessories available for the device.

Table 23 MC2200/MC2700 Accessories

Accessory	Part Number	Description
Cradles		
1-Slot Charge/USB Cradle	CRD-MC2X-1SCU-01	Provides device charging and allows USB Type-C communication to one device. Optional power supply WUA5V12W0WW sold separately.
1-Slot Charge/ Communication Cradle with Spare Battery Charger	CRD-MC2X-2SUCHG-01	Provides device charging and communication, and charging for spare battery. Requires power supply (PWR-BGA12V50W0WW), DC line cord (CBL-DC-388A1-01), and country-specific AC line cord. To enable Ethernet support requires MOD-MT2-EU1-01 sold separately.
4-Slot Charge Only ShareCradle with 4-Slot Battery Charger	CRD-MC2X-4SC4BC-01	Charges up to four devices and four spare batteries. Supports standard and extended capacity batteries. Requires power supply (PWR-BGA12V108W0WW), DC line cord (CBL-DC-381A1-01), and country-specific AC line cord.
5-Slot Charge Only ShareCradle	CRD-MC2X-5SCHG-01	Charges up to five devices. Requires power supply (PWR-BGA12V108W0WW), DC line cord (CBL-DC-381A1-01), and country-specific AC line cord.
Mini USB/Ethernet Module	MOD-MT2-EU1-01	Use with 1-Slot Cradle with Spare Battery Charger to provide Ethernet connectivity.
Batteries and Chargers		
3500 mAh PowerPrecisionStandard Battery	BTRY-MC2X-35MA-01BTRY-MC2X-35MA-10BTRY-MC2X-35MA-IN	Replacement standard battery (single pack).Replacement standard battery (10–pack).Replacement standard battery (India).

Table 23 MC2200/MC2700 Accessories (Continued)

Accessory	Part Number	Description
4900 mAh PowerPrecision ExtendedBattery	BTRY-MC2X-49MA-01BTRY-MC2X-49MA-10BTRY-MC2X-49MA-IN	Replacement extended battery (single pack).Replacement extended battery (10–pack).Replacement extended battery (India).
4-Slot Battery Charger	SAC-MC2X-4SCHG-01	Charges up to four spare batteries. Supports standard and extended capacity batteries. Requires power supply (PWR-BGA12V50W0WW), DC line cord (CBL-DC-388A1-01), and country-specific AC line cord.
Charge and Communication Cables		
USB-C Cable	CBL-TC5X-USBC2A-01	Provides UBC-A to USB-C communication and power to the device. Use with 1-Slot Charge/ USB Cradle.
Micro USB Communication Cable	25-124330-01R	Provides USB communication for the 1-Slot Charge/Communication Cradle with Spare Battery Charger and the USB/Ethernet Module.
Audio Accessories		
HS3100 Rugged Bluetooth Headset	HS3100-BTN-L	Behind-the-Neck Headband Left. Includes HS3100 Boom Module and HSX100 BTN Left Headband Module.
HS3100 Rugged Bluetooth Headset	HS3100-OTH	Over the Head Headband. Includes HS3100 Boom Module and HSX100 OTH Headband Module.
Miscellaneous		
Trigger Handle	TRG-MC2X-SNP1-01	MC2200/MC2700 Snap-on trigger handle that adds a gun-style handle with a scanner trigger for comfortable and productive scanning. Supports device with either standard or extended battery.
Tempered Glass Screen Protector	MISC-MC2X-SCRNPT-01	Add additional screen protection (5-pack).
Straight Rubber Boot	SG-MC2X-RB1-01	Rubber boot for device only.
Trigger Handle Rubber Boot	SG-MC2X-RBH2-01	Rubber boot for device with trigger handle installed.
Carrying Solutions		
Soft Holster	SG-MC2X-HLSTR-01	Allows the device to be worn on the belt or cross-body. The kit only includes the belt clip. The shoulder strap can be purchased separately (58-40000-007R). Not compatible with trigger handle installed.
Gun Holster	SG-MC3021212-01R	MC3000 fabric holster for gun configurations.
Straight Hand Strap	SG-MC2X-HSTRP-01	Replacement hand strap for brick only.
Trigger Handle Hand Strap	SG-MC2X-HSTRPH-01	Hand strap for device with trigger handle.

Table 23 MC2200/MC2700 Accessories (Continued)

Accessory	Part Number	Description
Shoulder Strap	58-40000-007R	Universal shoulder strap.
Belt	11-08062-02R	Rugged belt for hip holster.
Power Supplies		
Power Supply	PWR-BGA12V50W0WW	Provides power to the 1-Slot Charge/ Communication Cradle with Spare Battery Charger and 4-Slot Battery Charger.Requires DC line cord CBL-DC-388A1-01 and country specific AC line cord sold separately.
Power Supply	PWR-BGA12V108W0WW	Provides power to the 4-Slot Charge Only ShareCradle with 4-Slot Battery Charger and 5-Slot Charge Only ShareCradle.Requires DC line cord, CBL-DC-381A1-01 and country specific three wire grounded AC line cord sold separately.
Power Supply	PWR-WUA5V12W0WW	Type A USB port wall adapter to support up to 2.4 A.
Power Supply	PWR-WUA5V12W0US	Provides 12 VDC, 2.5 A power to the USB cable. Includes plug adapter for use in the United States.
Power Supply	PWR-WUA5V12W0EU	Provides 12 VDC, 2.5 A power to the USB cable. Includes plug adapter for use in the European Union.
Power Supply	PWR-WUA5V12W0GB	Provides 12 VDC, 2.5 A power to the USB cable. Includes plug adapter for use in the United Kingdom.
Power Supply	PWR-WUA5V12W0AU	Provides 12 VDC, 2.5 A power to the USB cable. Includes plug adapter for use in Australia.
Power Supply	PWR-WUA5V12W0CN	Provides 12 VDC, 2.5 A power to the USB cable. Includes plug adapter for use in China.
Power Supply	PWR-WUA5V12W0IN	Provides 12 VDC, 2.5 A power to the USB cable. Includes plug adapter for use in India.
Power Supply	PWR-WUA5V12W0KR	Provides 12 VDC, 2.5 A power to the USB cable. Includes plug adapter for use in Korea.
Power Supply	PWR-WUA5V12W0BR	Provides 12 VDC, 2.5 A power to the USB cable. Includes plug adapter for use in Brazil.
DC Line Cord	CBL-DC-381A1-01	Provides power from the power supply (PWR-BGA12V108W0WW) to the 4-Slot Charge Only ShareCradle with 4-Slot Battery Charger and 5-Slot Charge Only ShareCradle.
DC Line Cord	CBL-DC-388A1-01	Provides power from the power supply (PWR-BGA12V50W0WW) to the 1-Slot Charge/ Communication Cradle with Spare Battery Charger and 4-Slot Battery Charger.
US AC Line Cord	23844-00-00R	Provide power to power supplies.

Battery Charging

This section describes how to charge the main and spare batteries of the device.

Charging the Main Battery

To charge the device:

1. Insert the device into a slot to begin charging.
2. Ensure the device is seated properly.

The device's Charging/Notification LED indicates the status of the battery charging in the device. The standard battery charges from fully depleted to 90% in less than three hours. The extended battery charges from fully depleted to 90% in less than three and a half hours.

NOTE: In many cases, the 90% charge provides plenty of charge for daily use. To achieve the fastest charging results, use only Zebra charging accessories and batteries. Charge batteries at room temperature with the device in sleep mode.

Table 24 Charging/Notification LED Charging Indicators

State	Indication
Off	• Device is not charging. • Device is not inserted correctly in the cradle or connected to a power source. • Charger/cradle is not powered.
Slow Blinking Amber (1 blink every 4 seconds)	Device is charging.
Slow Blinking Red (1 blink every 4 seconds)	Device is charging, but the battery is at end of useful life.
Solid Green	Charging complete.
Solid Red	Charging is complete, but the battery is at end of useful life.
Fast Blinking Amber (2 blinks/second)	Charging error, for example: • Temperature is too low or too high. • Charging has gone on too long without completion (typically eight hours).
Fast Blinking Red (2 blinks/second)	Charging error, but the battery is at end of useful life. For example: • Temperature is too low or too high. • Charging has gone on too long without completion (typically eight hours).

Charging the Spare Battery

To charge a spare battery:

1. Insert the battery into a battery charging well.

2. Gently press down on the battery to ensure proper contact.

The Spare Battery Charging LED on the cup indicates the status of the spare battery charging. The standard battery charges from fully depleted to 90% in less than three hours. The extended battery charges from fully depleted to 90% in less than three and a half hours.

NOTE: In many cases the 90% charge provides plenty of charge for daily use. To achieve the best fast charging results use only Zebra charging accessories and batteries. Charge batteries at room temperature with the device in sleep mode.

Table 25 Spare Battery LED Charging Indicators

LED	Indication
Solid Amber	Spare battery is charging.
Solid Green	Spare battery charging is complete.
Solid Red	Spare battery is charging and battery is at the end of useful life. Charging complete and battery is at the end of useful life.
Fast Blinking Red (2 blinks/second)	Error in charging; check placement of spare battery and battery is at the end of useful life.
Off	No spare battery in slot. Spare battery not placed in slot correctly. Cradle is not powered.

Charging Indicators

The charging/notification LED indicates charging status.

Table 26 Charging Indicators

State	Indication
Off	• Device is not charging. • Device is not inserted correctly in the cradle or connected to a power source. • Charger/cradle is not powered.
Slow Blinking Amber (1 blink every 4 seconds)	Device is charging.
Slow Blinking Red (1 blink every 4 seconds)	Device is charging, but the battery is at end of useful life.
Solid Green	Charging complete.
Solid Red	Charging is complete, but the battery is at end of useful life.
Fast Blinking Amber (2 blinks/ second)	Charging error, for example: • Temperature is too low or too high. • Charging has gone on too long without completion (typically 8 hours).

Table 26 Charging Indicators (Continued)

State	Indication
Fast Blinking Red (2 blinks/second)	Charging error, but the battery is at end of useful life. For example: • Temperature is too low or too high. • Charging has gone on too long without completion (typically 8 hours).

Charging Temperature

Charge the batteries in temperatures from 0°C to 40°C (32°F to 104°F). The device or accessory always performs battery charging in a safe and intelligent manner.

At higher temperatures, for example, 37°C (98°F)) the device or accessory may for brief periods of time alternately enable and disable battery charging to keep the battery at acceptable temperatures. The device or accessory indicates when charging is disabled due to abnormal temperatures via its LED and a notification appears on the display.

1-Slot Charge/USB Cradle

The 1-Slot Charge/USB Cradle:

- Provides 5 VDC power for operating the device.
- Provides USB communication with host computer.
- Charges the device's battery.

Figure 21 1-Slot Charge/USB Cradle

1	Charging slot

1-Slot Charge/Communication Cradle with Spare Battery Charger

The 1-Slot Charge/Communication Cradle with Spare Battery Charger:

- Provides 12 VDC power for operating the device.
- Provides Ethernet communication using the Ethernet Module adapter
- Charges the device's battery.
- Charges one spare battery.

Figure 22 1-Slot Charge/Communication Cradle with Spare Battery Charger

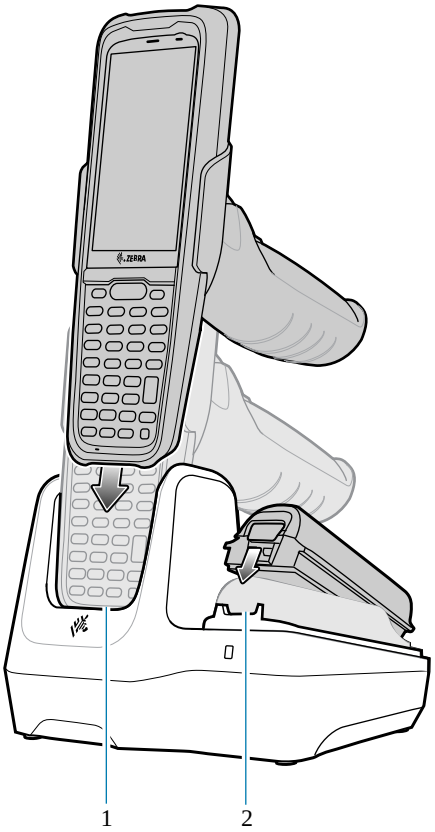

1	Charging/communication slot
2	Spare battery slot

4-Slot Charge Only ShareCradle with 4-Slot Battery Charger

The 4-Slot Charge Only ShareCradle with 4-Slot Battery Charger:

- Provides 12 VDC power for operating the device.
- Simultaneously charges up to four devices and up to four spare batteries.

Figure 23 4-Slot Charge Only ShareCradle with 4-Slot Battery Charger

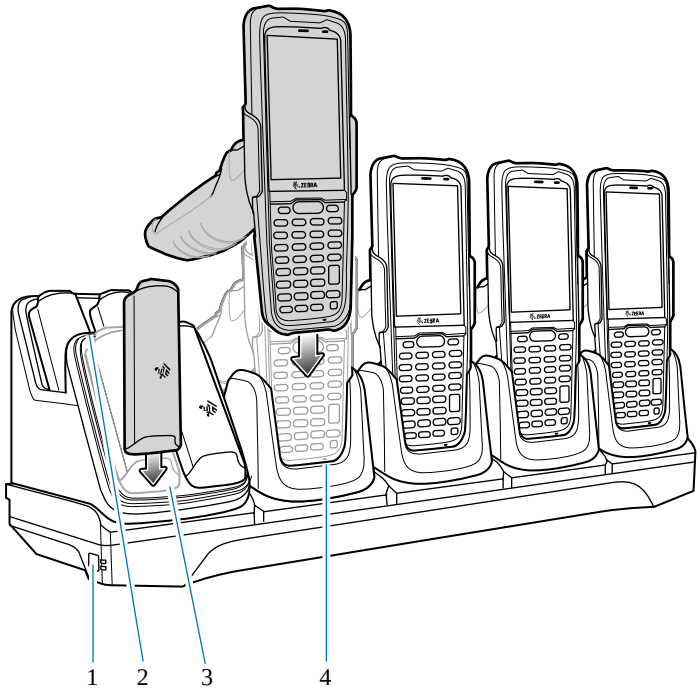

1	Power LED
2	Spare battery charging LED
3	Spare battery slot
4	Charging slot

5-Slot Charge Only ShareCradle

The 5-Slot Charge Only ShareCradle:

- Provides 12 VDC power for operating the device.
- Simultaneously charges up to five devices.

Figure 24 5-Slot Charge Only ShareCradle

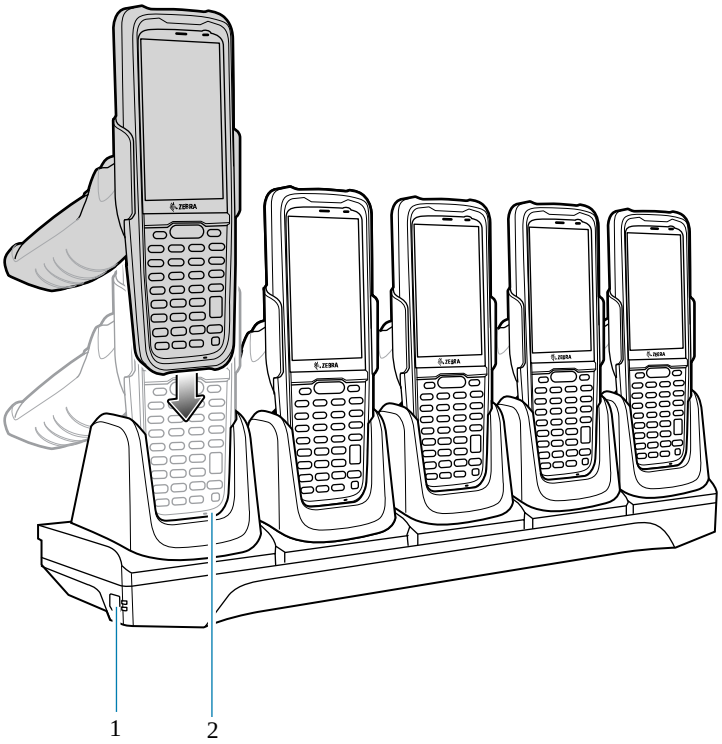

1	Power LED
2	Charging Slot

4-Slot Battery Charger

The 4-Slot Battery Charger:

- Charges up to four spare batteries.

Figure 25 4-Slot Battery Charger

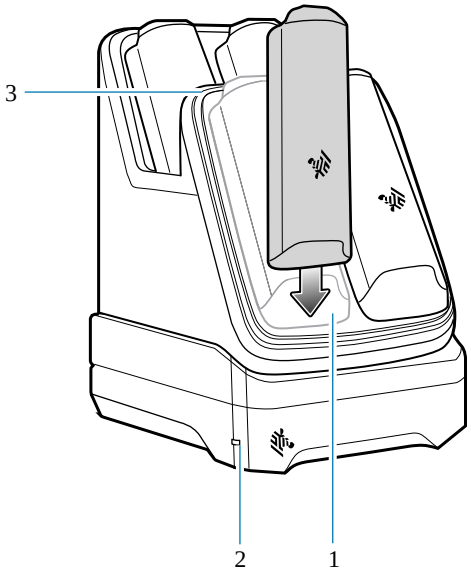

1	Power LED
2	Spare battery slot
3	Battery charging LED

USB-C Cable

The USB-C cable plugs into the bottom of the device. When attached to the device the cable allows charging, transferring data to a host computer, and connecting USB peripherals.

Figure 26 USB-C Cable

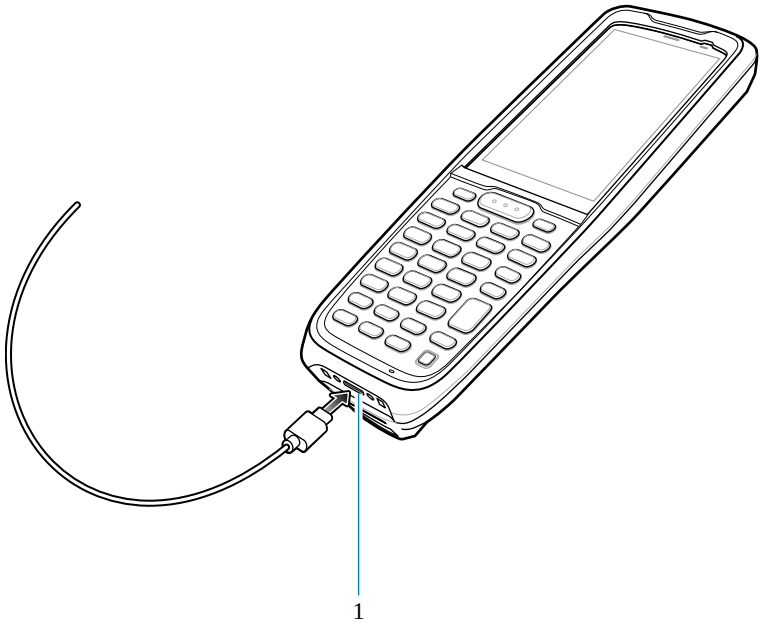

1	USB slot

Connecting the Device to the Host Computer

1. Connect the USB cable to the device.
2. Connect the USB connector of the cable to a host computer.

Charging the Device with the USB-C Cable

1. Connect the USB cable to the device.
2. Connect the USB connector of the power supply.
3. Plug to power supply into a power outlet.

Installing/Removing the Trigger Handle

This section explains installing and removing the trigger handle with a hand strap mount and using a battery finger scoop.

Installing the Trigger Handle Using the Hand Strap Mount

1. Align the hand strap mount on the back of the device with the recess on the trigger handle.

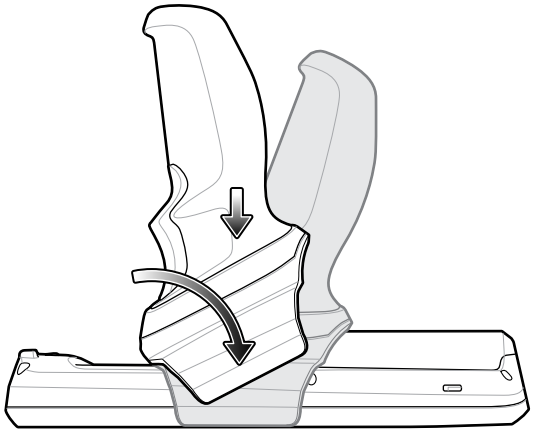

2. Rotate the trigger handle down to grab the device.

Installing the Trigger Handle Using the Battery Finger Scoop

1. Align the battery finger scoop with the recess on the trigger handle.

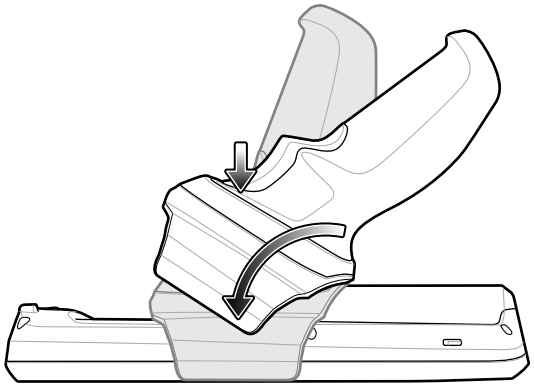

2. Rotate the trigger handle down to grab the device.

Removing the Trigger Handle

- Rotate the trigger handle toward the top of the device and lift up to remove.

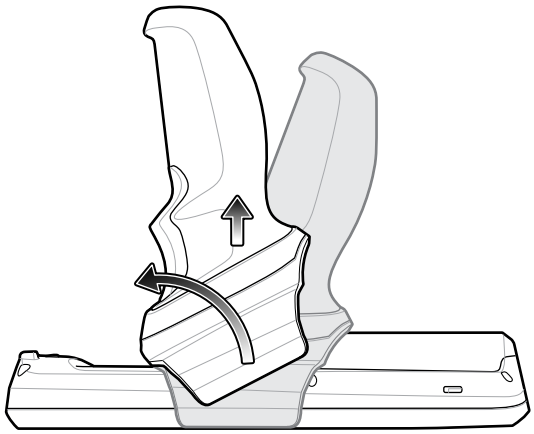

- Alternately, rotate the trigger handle toward the bottom of the device and lift up to remove.

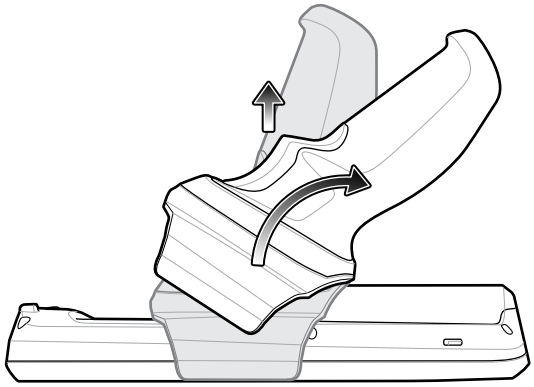

Installing the Hand Strap on Device

1. Insert the hand strap clip into the hand strap clip slot on the bottom of the device.

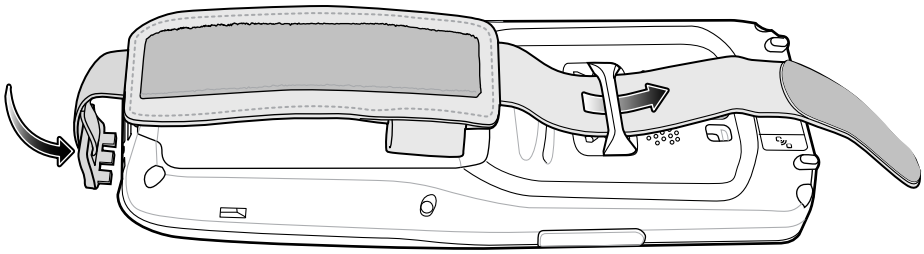

2. Feed the top end of the hand strap through the hand strap mount at the top of the device.
3. Flip the strap over the hand strap mount and attach the end of the strap using the velcro.

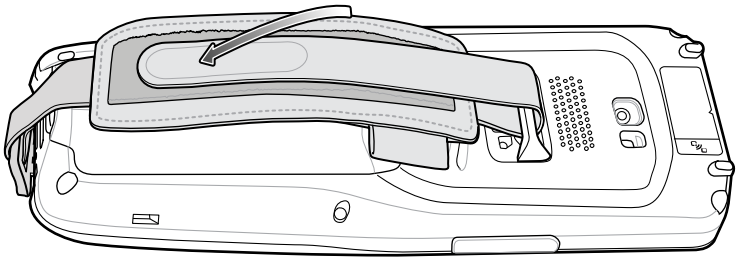

4. Place hand between device and hand strap and adjust hand strap as necessary.

Installing the Hand Strap on Device with Trigger Handle

1. Loop and tie the tether end of the hand strap with the hand strap mount.

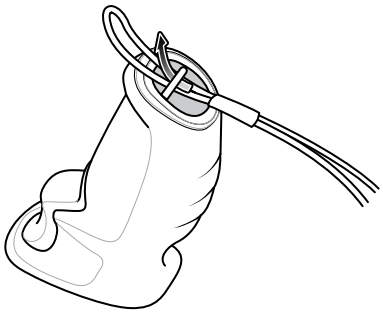

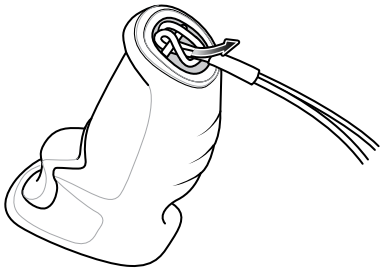

2. Adjust the slide button according to wrist size and place hand between the hand strap.

Holster

The fabric holster provides a soft holder for the device.

Holster for Device

This holster consists of a fabric mobile computer holder, a detachable shoulder strap, and a belt clip.

Using the Belt Clip

The fabric holster holds the device on a belt or waistband.

1. Secure the belt clip on the fabric holster, if it is not already attached.

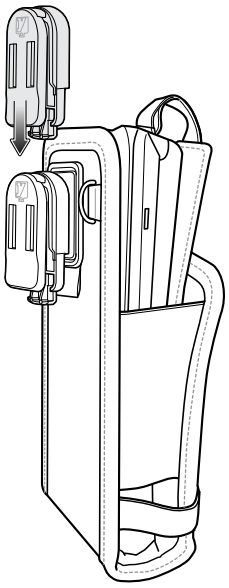

2. Secure the belt clip on the belt or waistband.

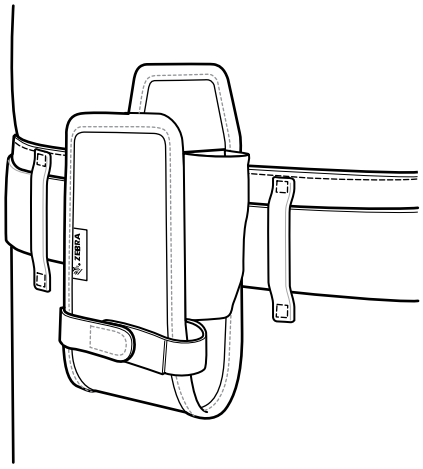

3. To insert the device, slide the device into the fabric holster with the screen display first and the screen display facing the user.

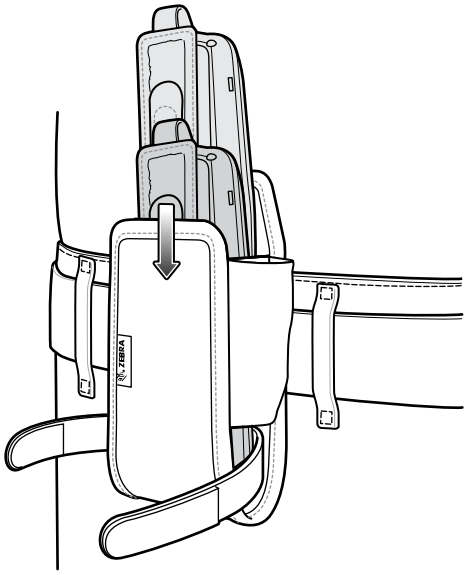

4. Secure the device with the restraining strap and tighten the Velcro to secure in place.

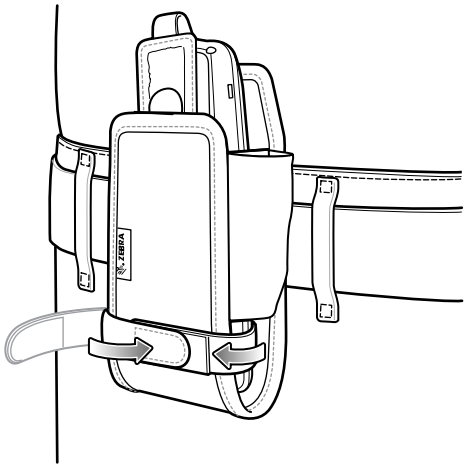

5. To remove the device, lift the restraining strap to release. Lift the device out of the fabric holster.

Using the Shoulder Strap

Attach the fabric holster to a shoulder strap.

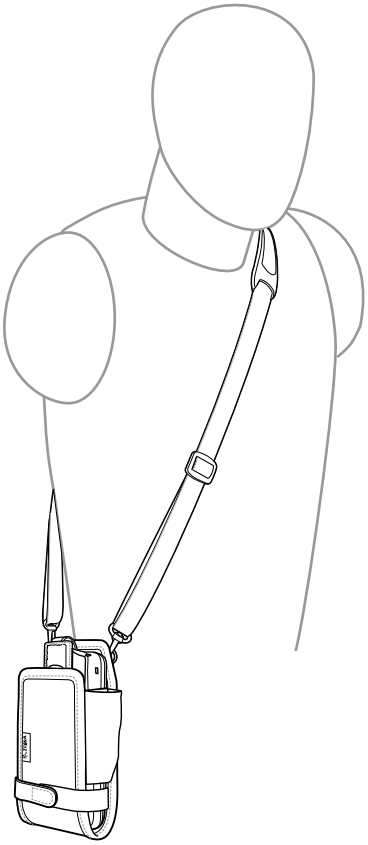

1. Connect the clips on the shoulder strap to the rings on the fabric holster.
2. Place the shoulder strap over your head and rest on your shoulder.
3. Lift the strap and insert the device into the holster.
4. Secure the strap to hold the device in place.

Holster for Device with Trigger Handle

This holster consists of a fabric mobile computer holder, a detachable shoulder strap, and a belt strap.

See instructions below to attach the fabric holster to a belt and shoulder strap.

Using the Belt Strap

Attach the fabric holster to a belt or waistband.

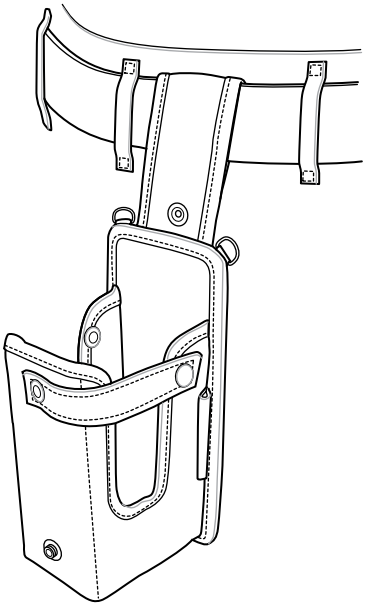

1. Secure the belt strap over the belt or waistband and snap into place.

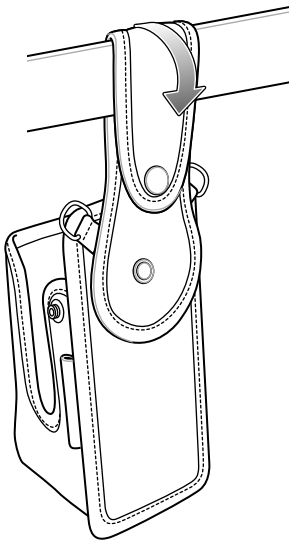

2. To insert the device with the trigger handle, slide the device into the fabric holster with the screen facing forward.

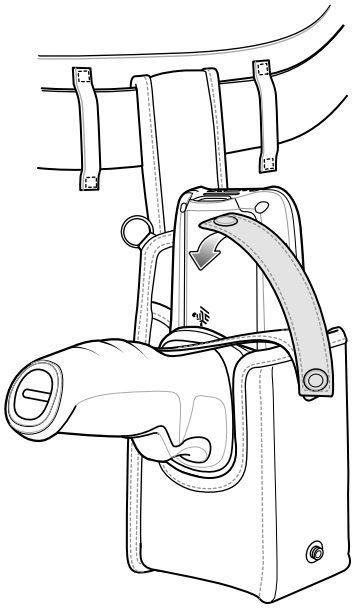

3. Secure the device with the restraining strap and place it over the device to secure it in place.
4. To remove the device, unstrap the restraining strap to release. Lift the device out of the fabric holster.

Using the Shoulder Strap

Attach the fabric holster to a shoulder strap.

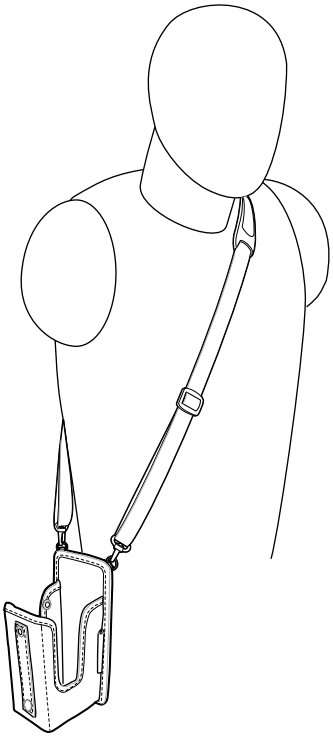

1. Connect the clips on the shoulder strap to the rings on the fabric holster.

2. Place the shoulder strap over your head and rest on your shoulder.
3. Lift the strap and insert the device with the trigger handle into the holster.
4. Secure the strap to hold the device in place.

Rubber Boot

The rubber boot provides additional protection for the device.

Installing the Rubber Boot on the Device

1. Slide the bottom of the device into the bottom of the rubber boot.

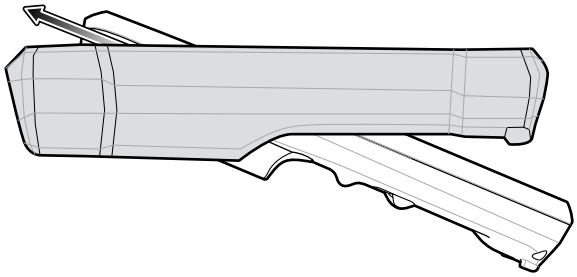

2. Grasp the top of the rubber boot and place over the top of the device.

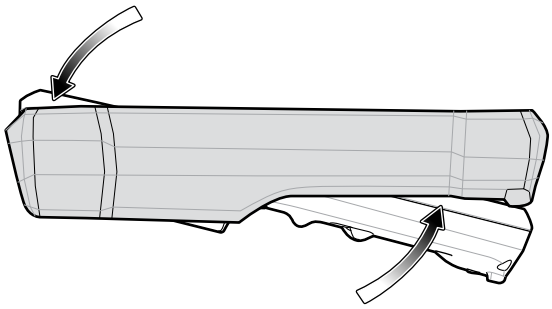

NOTE: To function properly, remove the entire rubber boot from the device before placing the device in a charging cradle.

Installing the Rubber Boot on Device with a Trigger Handle

1. Slide the top of the device into the top of the rubber boot.

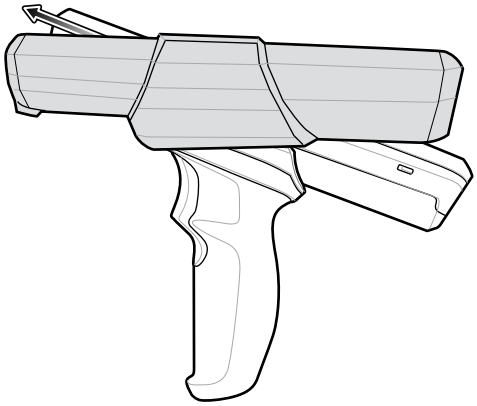

2. Grasp the bottom of the rubber boot and place over the bottom of the device.

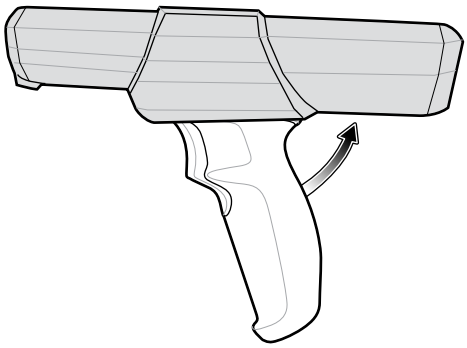

NOTE: To function properly, remove the entire rubber boot from the device before placing the device in a charging cradle.

Application Deployment

This section provides an overview of device security, app development, and app management. It also provides instructions for installing apps and updating the device software.

NOTE: Ensure that the date is set correctly before installing certificates or when accessing secure websites.

Secure Certificates

If the VPN or Wi-Fi networks rely on secure certificates, obtain the certificates and store them in the device's secure credential storage, before configuring access to the VPN or Wi-Fi networks.

If downloading the certificates from a web site, set a password for the credential storage. The device supports X.509 certificates saved in PKCS#12 key store files with a .p12 extension (if key store has a .pfx or other extension, change to .p12).

The device also installs any accompanying private key or certificate authority certificates contained in the key store.

Installing a Secure Certificate

If required by the VPN or Wi-Fi network, install a secure certificate on the device.

1. Copy the certificate from the host computer to the root of the microSD card or the device's internal memory.
2. Go to **Settings**.
3. Touch **Security** > **Advanced** > **Encryption & credentials**.
4. Touch **Install a certificate**.
5. Navigate to the location of the certificate file.
6. Touch the filename of the certificate to install.
7. If prompted, enter the password for credential storage. If a password has not been set for the credential storage, enter a password for it twice, and then touch **OK**.
8. If prompted, enter the certificate's password and touch **OK**.
9. Enter a name for the certificate and in the Credential use drop-down, select **VPN and apps** or **Wi-Fi**.

10. Touch **OK**.

    The certificate can now be used when connecting to a secure network. For security, the certificate is deleted from the microSD card or internal memory.

Configuring Credential Storage Settings

Configure credential storage from the device settings.

1. Go to **Settings**.
2. Touch **Security** > **Advanced** > **Encryption & credentials** .
3. Select an option.
   - Touch **Trusted credentials** to display the trusted system credentials.
   - Touch **User credentials** to display user credentials.
   - Touch **Install from storage** to install a secure certificate from the microSD card or internal storage.
   - Touch **Clear credentials** to delete all secure certificates and related credentials.

Android Development Tools

Development tools for Android include Android Studio, EMDK for Android, and StageNow.

Android Development Workstation

Android development tools are available at developer.android.com.

To start developing applications for the device, download Android Studio. Development can take place on a Microsoft® Windows®, Mac® OS X®, or Linux® operating system.

Applications are written in Java or Kotlin, but compiled and executed in the Dalvik virtual machine. Once the Java code is compiled cleanly, the developer tools make sure the application is packaged properly, including the AndroidManifest.xml file.

Android Studio contains a full featured IDE as well as SDK components required to develop Android applications.

Enabling Developer Options

The **Developer options** screen sets development-related settings. By default, the Developer Options are hidden.

1. Go to **Settings**.
2. Touch **About phone**.
3. Scroll down to **Build number**.
4. Tap **Build number** seven times.

   The message **You are now a developer!** appears.
5. Touch **Back**.
6. Touch **System** > **Advanced** > **Developer options** .
7. Slide the **USB debugging** switch to the **ON** position.

EMDK for Android

EMDK for Android provides developers with tools to create business applications for enterprise mobile devices. It is designed for use with Google's Android Studio and includes Android class libraries such as Barcode, sample applications with source code, and the associated documentation.

EMDK for Android allows applications to take full advantage of the capabilities that Zebra devices have to offer. It embeds Profile Manager technology within Android Studio IDE, providing a GUI-based development tool designed specifically for Zebra devices. This allows fewer lines of code, resulting in reduced development time, effort, and errors.

See Also

For more information go to techdocs.zebra.com.

StageNow for Android

StageNow is Zebra's next-generation Android Staging Solution built on the MX platform. It allows quick and easy creation of device profiles, and can deploy to devices simply by scanning a barcode, reading a tag, or playing an audio file.

The StageNow Staging Solution includes the following components:

- The StageNow Workstation tool installs on the staging workstation (host computer) and lets the administrator easily create staging profiles for configuring device components, and perform other staging actions such as checking the condition of a target device to determine suitability for software upgrades or other activities. The StageNow Workstation stores profiles and other created content for later use.
- The StageNow Client resides on the device and provides a user interface for the staging operator to initiate staging. The operator uses one or more of the desired staging methods (print and scan a barcode, read an NFC tag or play an audio file) to deliver staging material to the device.

See Also

For more information go to techdocs.zebra.com.

GMS Restricted

GMS Restricted mode deactivates Google Mobile Services (GMS). All GMS apps are disabled on the device and communication with Google (analytics data collection and location services) is disabled.

Use StageNow to disable or enable GMS Restricted mode. After a device is in GMS Restricted mode, enable and disable individual GMS apps and services using StageNow. To ensure GMS Restricted mode persists after an Enterprise Reset, use the Persist Manager option in StageNow.

See Also

For more information on StageNow, refer to techdocs.zebra.com.

ADB USB Setup

To use the ADB, install the development SDK on the host computer then install the ADB and USB drivers.

Before installing the USB driver, make sure that the development SDK is installed on the host computer. Go to developer.android.com/sdk/index.html for details on setting up the development SDK.

The ADB and USB drivers for Windows and Linux are available on the Zebra Support Central web site at zebra.com/support. Download the ADB and USB Driver Setup package. Follow the instructions with the package to install the ADB and USB drivers for Windows and Linux.

Enabling USB Debugging

By default, USB debugging is disabled.

1. Go to **Settings**.
2. Touch **About phone**.
3. Scroll down to **Build number**.
4. Tap **Build number** seven times.

   The message **You are now a developer!** appears.
5. Touch **Back**.
6. Touch **System** > **Advanced** > **Developer options** .
7. Slide the **USB debugging** switch to the **ON** position.
8. Touch **OK**.
9. Connect the device to the host computer using the Rugged Charge/USB Cable.

   The **Allow USB debugging?** dialog box appears on the device.

   If the device and host computer are connected for the first time, the **Allow USB debugging?** dialog box with the **Always allow from this computer** check box displays. Select the check box, if required.
10. Touch **OK**.
11. Touch **OK** or **Allow**.
12. On the host computer, navigate to the **platform-tools** folder and open a command prompt window.
13. Type `adb devices`.

    The following displays:

    ```
    List of devices attached          XXXXXXXXXXXXXXX device
    ```

    Where XXXXXXXXXXXXXXX is the device number.

NOTE: If device number does not appear, ensure that ADB drivers are installed properly.

14. Return to the Home screen.

Application Installation Methods

After an application is developed, install the application onto the device using one of the supported methods.

- USB connection
- Android Debug Bridge
- microSD Card
- Mobile device management (MDM) platforms that have application provisioning. Refer to the MDM software documentation for details.

Installing Applications Using the USB Connection

Use the USB connection to install applications onto the device.

1. On the device, pull down the Notification panel and touch **Charging this device via USB**.

   By default, **No data transfer** is selected.
2. Connect the device to a host computer using a USB-C cable or insert the device into the 1-Slot USB/ Ethernet Cradle.
3. Touch **File Transfer**.
4. On the host computer, open a file explorer application.
5. On the host computer, copy the application APK file from the host computer to the device.

CAUTION—PRODUCT DAMAGE: Carefully follow the host computer's instructions to unmount the microSD card and disconnect USB devices correctly to avoid losing information.

6. Disconnect the device from the host computer.
7. Swipe the screen up and select to view files on the Internal Storage.
8. Locate the application APK file.
9. Touch the application file.
10. Touch **Continue** to install the app or **Cancel** to stop the installation.
11. To confirm installation and accept what the application affects, touch **Install** otherwise touch **Cancel**.
12. Touch **Open** to open the application or **Done** to exit the installation process.

    The application appears in the App list.

Installing Applications Using the Android Debug Bridge

Use ADB commands to install applications onto the device.

CAUTION—PRODUCT DAMAGE: When connecting the device to a host computer and mounting the microSD card, follow the host computer's instructions for connecting and disconnecting USB devices to avoid damaging or corrupting files.

1. Ensure that the ADB drivers are installed on the host computer.
2. Connect the device to a host computer using a USB cable.
3. Go to **Settings**.

4. Touch **System** > **Advanced** > **Developer options** .
5. Slide the **USB debugging** switch to the **ON** position.
6. If the device and host computer are connected for the first time, the **Allow USB debugging?** dialog box with the **Always allow from this computer** check box displays. Select the check box, if required.
7. Touch **OK** or **Allow**.
8. On the host computer, navigate to the **platform-tools** folder and open a command prompt window.
9. Type `adb install <application>`.

   where: <application> = the path and filename of the apk file.
10. Disconnect the device from the host computer.

Installing Applications Using Wireless ADB

Use ADB commands to install an application onto the device.

Go to the Zebra Support & Downloads web site at zebra.com/support and download the appropriate Factory Reset file to a host computer.

IMPORTANT:

- Ensure the latest adb files are installed on the host computer.
- The device and host computer must be on the same wireless network.

1. Go to **Settings**.
2. Touch **System** > **Advanced** > **Developer options** .

IMPORTANT: If **Developer options** does not appear in the advanced system settings on your device, perform the steps in Enabling Developer Options on page 136.

3. Slide the **USB debugging** switch to the **ON** position.
4. At the prompt, tap **OK**.
5. Slide the **Wireless debugging** switch to the **ON** position.
   a) If the device and host computer are connected for the first time, the **Allow wireless debugging on this network?** dialog box with the **Always allow on this network** check box displays. Select the check box, if required.
   b) Touch **ALLOW**.

6. Touch **Wireless debugging**.

   The Wireless debugging screen displays.

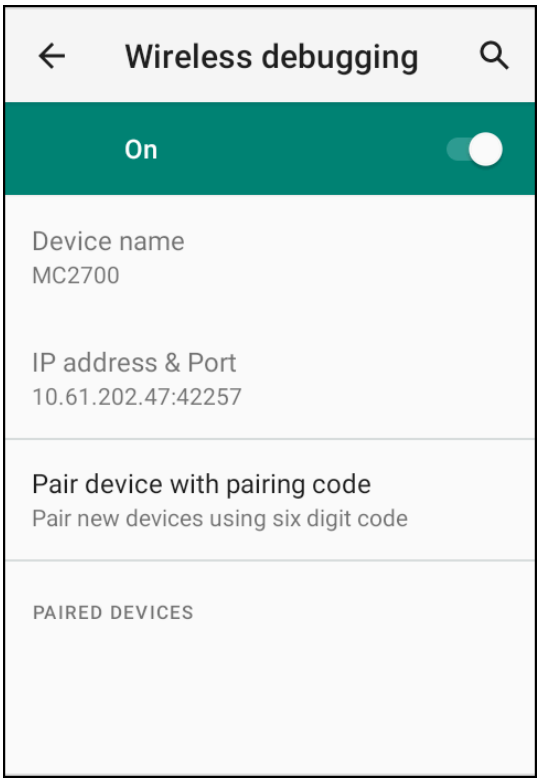

7. Note the IP address and Port on the **Wireless debugging** screen.
8. Touch **Pair device with pairing code**.

   The **Pair with device** dialog box displays.

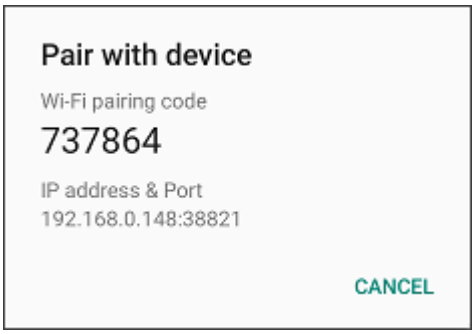

9. Note the Port on the **Pair with device** dialog box. It will be different than the one on the **Wireless debugging** screen. The IP address will be the same.
10. On the host computer, navigate to the **platform-tools** folder and open a command prompt window.
11. Type `adb pair XX.XX.XX.XX:XXXXX`

    where XX.XX.XX.XX:XXXXX is the IP address and port number from the **Pair with device** dialog box.
12. Press **Enter**.
13. Type the pairing code from the **Pair with device** dialog box.

14. Press **Enter**.
15. Type `adb connect XX.XX.XX.XX:XXXXX`

    where XX.XX.XX.XX:XXXXX is the IP address and port number from the **Wireless debugging** screen.
16. Press **Enter**.

    The device is now connected to the host computer.
17. Type `adb devices`.

    The following displays:

    ```
    List of devices attached
    XXXXXXXXXXXXXXX device
    ```

    Where XXXXXXXXXXXXXXX is the device number.

NOTE: If the device number does not appear, ensure that the ADB drivers are installed properly.

18. Press **Enter**.
19. Type `adb install <file>`.

    where <file> = the path and filename of the apk file.
20. Press **Enter**.
21. On the host computer, type `adb disconnect`.
22. Press **Enter**.

Installing Applications Using a microSD Card

Use a microSD card to install applications on your device.

CAUTION—PRODUCT DAMAGE: When connecting the device to a host computer and mounting the microSD card, follow the host computer's instructions for connecting and disconnecting USB devices, to avoid damaging or corrupting files.

1. Copy the APK file to the root of the microSD card.
   - Copy the APK file to a microSD card using a host computer (see USB Communication for more information), and then install the microSD card into the device (see Replacing the microSD Card for more information).
   - Connect the device with a microSD card already installed to the host computer, and copy the .apk file to the microSD card. See USB Communication for more information. Disconnect the device from the host computer.
2. Connect the device to a host computer using USB.
3. Copy the application APK file from the host computer to the microSD card.
4. Remove the microSD card from the host computer.
5. Press and hold the Power button on the device until the menu appears.
6. Touch **Power off**.
7. Press the two battery latches in.

8. Lift the battery from the device.
9. Lift the access door.
10. Insert the microSD card.
11. Replace the access door.
12. Insert the battery, bottom first, into the battery compartment in the back of the device.
13. Press the battery down until the battery release latches snap into place.
14. Press and hold **Power** to turn on the device.
15. Swipe the screen up and select to view files on the microSD card.
16. Touch **SD card**.
17. Locate the application APK file.
18. Touch the application file.
19. Touch **Continue** to install the app or **Cancel** to stop the installation.
20. To confirm installation and accept what the application affects, touch **Install**. Otherwise, touch **Cancel**.
21. Touch **Open** to open the application or **Done** to exit the installation process.

    The application appears in the App list.

Uninstalling an Application

Free up device memory by removing unused apps.

1. Go to **Settings**.
2. Touch **Apps & notifications**.
3. Touch **See all apps** to view all apps in the list.
4. Scroll through the list to the app.
5. Touch the app. The **App info** screen appears.
6. Touch **Uninstall**.
7. Touch **OK** to confirm.

Android System Update

System Update packages can contain either partial or complete updates for the operating system. Zebra distributes the System Update packages on the Zebra Support & Downloads website. Perform a system update using either a microSD card or using ADB.

Performing a System Update Using microSD Card

Go to the Zebra Support & Downloads web site at zebra.com/support and download the appropriate System Update package to a host computer.

1. Copy the System Update zip file to the root of the microSD card.
   - Copy the ZIP file to a microSD card using a host computer, and then install the microSD card into the device. See Getting Started for information on installing the microSD card.
   - Connect the device with a microSD card already installed to the host computer, copy the ZIP file to the microSD card, and then disconnect the device from the host computer.
2. Press and hold **Power** until the menu appears.
3. Touch **Restart**.
4. Press and hold **P1**, or the trigger handle (if connected), and **Power** to enter system recovery mode.
5. Press **Up Arrow** and **Down Arrow** to navigate to **Apply upgrade from SD card**.
6. Press **Enter** or **Power** to select.
7. Press **Up Arrow** and **Down Arrow** to navigate to **Full OTA Package** or **Diff OTA Package**.
8. Press **Enter** or **Power** to select.
9. Use **Up** and **Down** to navigate to the System Update file.
10. Press **Enter** or **Power** to start the system update install. After the installation, the device returns to the Recovery screen.
11. Navigate to **Reboot system now** and press **Enter** or **Power** to reboot the device.

Performing a System Update Using ADB

Use ADB to perform a system update.

Go to the Zebra Support & Downloads web site at zebra.com/support and download the appropriate System Update package to a host computer.

1. Connect the device to a host computer using a USB-C cable or by inserting the device into the 1-Slot USB/Ethernet Cradle.
2. Go to **Settings**.
3. Touch **System** > **Advanced** > **Developer options** .
4. Slide the **USB debugging** switch to the **ON** position.
5. Touch **OK**.
6. If the device and host computer are connected for the first time, the **Allow USB debugging?** dialog box with the **Always allow from this computer** check box displays. Select the check box, if required.
7. Touch **OK** or **Allow**.
8. On the host computer, navigate to the **platform-tools** folder and open a command prompt window.
9. Type `adb devices`.

NOTE: If the device number does not appear, ensure that the ADB drivers are installed properly.

10. Type `adb reboot recovery`.
11. Press **Enter**.

    The System Recovery screen appears on the device.
12. Press **Up Arrow** and **Down Arrow** to navigate to **Apply upgrade from ADB**.

13. Press **Enter** or **Power** to select.
14. On the host computer command prompt window type `adb sideload <file>`.

    where: <file> = the path and filename of the zip file.
15. Press **Enter**.

    The System Update installs (progress appears as a percentage in the Command Prompt window) and then the System Recovery screen appears on the device.
16. Navigate to **Reboot system now** and press the Enter key or Power button to reboot the device.

Verifying System Update Installation

Verify that the system update was successful.

1. Go to **Settings**.
2. Touch **About phone**.
3. Scroll down to **Build number**.
4. Ensure that the build number matches the new system update package file number.

Android Enterprise Reset

An Enterprise Reset erases all user data in the /data partition, including data in the primary storage locations (/sdcard and emulated storage), while preserving the contents of the /enterprise folder and its subfolders. The contents of the /enterprise folder and its subfolders are preserved. Zebra distributes the Enterprise Reset packages on the Zebra Support & Downloads website.

Before performing an Enterprise Reset, provision all necessary configuration files and restore after the reset.

Perform Enterprise Reset from the device settings, using a microSD card, or using ADB.

Performing an Enterprise Reset From Device Settings

Perform an Enterprise Reset from the device settings.

1. Go to **Settings**.
2. Touch **System** > **Advanced** > **Reset Options** > **Erase all data (enterprise reset)**.
3. Touch **Erase all data** twice to confirm the Enterprise Reset.

Performing an Enterprise Reset Using microSD Card

Go to the Zebra Support & Downloads web site at zebra.com/support and download the appropriate Enterprise Reset file to a host computer.

1. Copy the Enterprise Reset zip file to the root of the microSD card.
   - Copy the zip file to a microSD card using a host computer and then install the microSD card into the device. See Getting Started for more information.
   - Connect the device with a microSD card already installed to the host computer and copy zip file to the microSD card. See USB Communication for more information. Disconnect the device from the host computer.

2. Press and hold **Power** until the menu appears.
3. Touch **Restart**.
4. Press and hold **P1**, or the trigger handle (if connected), and **Power** to enter system recovery mode.
5. Press **Up Arrow** and **Down Arrow** to navigate to **Apply upgrade from SD card**.
6. Press **Enter** or **Power** to select.
7. Press **Up Arrow** and **Down Arrow** to navigate to **Full OTA Package**.
8. Press **Enter** or **Power** to select.
9. Press **Up Arrow** and **Down Arrow** to navigate to the Enterprise Reset file.
10. Press **Enter** or **Power** to start the Enterprise Reset.

    The Enterprise Reset occurs and then the device returns to the Recovery screen.
11. Navigate to **Reboot system now** and press **Enter** or **Power** to reboot the device.

Performing an Enterprise Reset Using ADB

Perform an Enterprise Reset using ADB.

1. Connect the device to a host computer using a USB-C cable or by inserting the device into the 1-Slot USB/Ethernet Cradle.
2. Go to **Settings**.
3. Touch **System** > **Advanced** > **Developer options** .
4. Slide the **USB debugging** switch to the **ON** position.
5. If the device and host computer are connected for the first time, the **Allow USB debugging?** dialog box with the **Always allow from this computer** check box displays. Select the check box, if required.
6. Touch **OK** or **Allow**.
7. On the host computer, navigate to the **platform-tools** folder and open a command prompt window.
8. Type `adb devices`.

   The following displays:

   ```
   List of devices attached
   XXXXXXXXXXXXXXX device
   ```

   Where XXXXXXXXXXXXXXX is the device number.

NOTE: If the device number does not appear, ensure that the ADB drivers are installed properly.

9. Type `adb reboot recovery`.
10. Press **Enter**.

    The System Recovery screen appears on the device.
11. Press **Up Arrow** and **Down Arrow** to navigate to **Apply upgrade from ADB**.
12. Press the **Enter** key or **Power** button to select.
13. Press **Up Arrow** and **Down Arrow** keys to navigate to **Full OTA Package**.

14. Press the **Enter** key or **Power** button to select.
15. On the host computer command prompt window type `adb sideload <file>`

    where: <file> = the path and filename of the zip file.
16. Press **Enter**.

    The Enterprise Reset package installs and then the System Recovery screen appears on the device.
17. Navigate to **Reboot system now** and press the Enter key or Power button to reboot the device.

Android Factory Reset

A Factory Reset erases all data in the /data and /enterprise partitions in internal storage and clears all device settings. A Factory Reset returns the device to the last installed operating system image. To revert to a previous operating system version, re-install that operating system image. Zebra distributes the Factory Reset packages on the Zebra Support & Downloads website.

Performing a Factory Reset Using microSD Card

Perform a Factory Reset using a microSD card.

Go to the Zebra Support & Downloads web site at zebra.com/support and download the appropriate Factory Reset file to a host computer.

1. Copy the Factory Reset zip file to the root of the microSD card.
   - Copy the zip file to a microSD card using a host computer and then installing the microSD card into the device. See Getting Started for more information.
   - Connect the device with a microSD card already installed to the host computer, copy zip file to the microSD card, and then disconnect the device from the host computer.
2. Press and hold **Power** until the menu appears.
3. Touch **Restart**.
4. Press and hold **P1**, or the trigger handle (if connected), and **Power** to enter system recovery mode.
5. Press **Up Arrow** and **Down Arrow** to navigate to **Apply upgrade from SD card**.
6. Press **Enter** or **Power** to select.
7. Use **Up** and **Down** to navigate to **Full OTA Package**.
8. Press **Enter** or **Power** to select.
9. Press **Up Arrow** and **Down Arrow** to navigate to the Factory Reset file.
10. Press **Enter** or **Power** to start the Factory Reset.

    After the Factory Reset the device returns to the Recovery screen.
11. Navigate to **Reboot system now** and press the Enter key or Power button to reboot the device.

Performing a Factory Reset Using ADB

Perform a Factory Reset using ADB.

Go to the Zebra Support & Downloads web site at zebra.com/support and download the appropriate Factory Reset file to a host computer.

1. Connect the device to a host computer using a USB-C cable or by inserting the device into the 1-Slot USB/Ethernet Cradle.
2. Go to **Settings**.
3. Touch **System** > **Advanced** > **Developer options** .
4. Slide the **USB debugging** switch to the **ON** position.
5. Touch **OK**.
6. If the device and host computer are connected for the first time, the **Allow USB debugging?** dialog box with the **Always allow from this computer** check box displays. Select the check box, if required.
7. Touch **OK** or **ALLOW**.
8. On the host computer, navigate to the **platform-tools** folder and open a command prompt window.
9. Type `adb devices`.

   The following displays:

   ```
   List of devices attached
   XXXXXXXXXXXXXXX device
   ```

   Where XXXXXXXXXXXXXXX is the device number.

NOTE: If the device number does not appear, ensure that the ADB drivers are installed properly.

10. Type:

    `adb reboot recovery`
11. On the host computer command prompt window type`adb sideload <file>`.

    where: <file> = the path and filename of the zip file.
12. Press **Enter**.

    The System Recovery screen appears on the device.
13. Press **Up Arrow** and **Down Arrow** to navigate to **Apply upgrade from ADB**.
14. Press **Enter** or **Power** to select.
15. Press **Up Arrow** and **Down Arrow** keys to navigate to **Full OTA Package**.
16. Press **Enter**.

    The Factory Reset package installs, and then the System Recovery screen appears on the device.
17. Navigate to **Reboot system now** and press the Enter key or Power button to reboot the device.

Android Storage

The device contains multiple types of file storage.

- Random Access Memory (RAM)
- Internal storage
- External storage (microSD card)
- Enterprise folder.

NOTE: It is recommended to install a microSD card on the device due to limited internal storage space.

Random Access Memory

Executing programs use RAM to store data. Data stored in RAM is lost upon a reset.

The operating system manages how applications use RAM. It only allows applications and component processes and services to use RAM when required. It may cache recently used processes in RAM, so they restart more quickly when opened again, but it will erase the cache if it needs the RAM for new activities.

The screen displays the amount of used and free RAM.

- **Performance** - Indicates memory performance.
- **Total memory** - Indicates the total amount of RAM available.
- **Average used (%)** - Indicates the average amount of memory (as a percentage) used during the period of time selected (default - 3 hours).
- **Free** - Indicates the total amount of unused RAM.
- **Memory used by apps** - Touch to view RAM usage by individual apps.

Viewing Memory

View the amount of memory used and free RAM.

1. Go to **Settings**.
2. Touch **System** > **Advanced** > **Developer options** .
3. Touch **Memory**.

Internal Storage

The device has internal storage. The internal storage content can be viewed and files copied to and from when the device is connected to a host computer. Some applications are designed to be stored on the internal storage rather than in internal memory.

Viewing Internal Storage

View available and used internal storage on the device.

1. Go to **Settings**.
2. Touch **Storage**.

   Internal Storage displays the total amount of space on internal storage and amount used.

   If the device has removable storage installed, touch **Internal shared storage** to display the amount of internal storage used by apps, photos, videos, audio, and other files.

External Storage

The device can have a removable microSD card. The microSD card content can be viewed and files copied to and from when the device is connected to a host computer. The device can have a removable USB drive. The USB drive content can be viewed and files copied to and from when the device is connected to a host computer.

Viewing External Storage

Portable storage displays the total amount of space on the installed microSD card or USB drive and the amount used.

1. Go to **Settings**.
2. Touch **Storage**.

   Touch **General USB Drive** to view the contents of the card.

   Touch **SD card** to view the contents of the card.
3. To unmount the microSD card, touch ⏏.
4. To unmount the USB drive, touch ⏏.

Formatting a microSD Card as Portable Storage

Format a microSD card as portable storage for the device.

1. Touch **SD card**.
2. Touch ⋮ > **Storage settings**.
3. Touch **Format**.
4. Touch **ERASE & FORMAT**.
5. Touch **DONE**.

Formatting a microSD Card as Internal Memory

You can format a microSD card as internal memory to increase the actual amount of the device's internal memory. Once formatted, the microSD card can only be read by this device.

NOTE: The suggested maximum SD card size is 128 GB when using internal storage.

1. Touch **SD card**.
2. Touch ⋮ > **Storage settings**.
3. Touch **Format as internal**.
4. Touch **ERASE & FORMAT**.
5. Touch **DONE**.

Enterprise Folder

The Enterprise folder (within internal flash) is a super-persistent storage that is persistent after a reset and an Enterprise Reset.

The Enterprise folder is erased during a Factory Reset. The Enterprise folder is used for deployment and device-unique data. The Enterprise folder is approximately 128 MB (formatted). Applications can persist data after an Enterprise Reset by saving data to the enterprise/user folder. The folder is ext4 formatted and is only accessible from a host computer using ADB or from an MDM.

Managing Apps

Apps use two kinds of memory: storage memory and RAM. Apps use storage memory for themselves and any files, settings, and other data they use. They also use RAM when they are running.

1. Go to **Settings**.
2. Touch **Apps & notifications**.
3. Touch **See all XX apps** to view all apps on the device.
4. Touch ⋮ > **Show system** to include system processes in the list.
5. Touch an app, process, or service in the list to open a screen with details about it and, depending on the item, to change its settings, permissions, notifications and to force stop or uninstall it.

App Details

Apps have different kinds of information and controls.

- **Force stop** - Stop an app.
- **Disable** - Disable an app.
- **Uninstall** - Remove the app and all of its data and settings from the device.
- **Notifications** - Set the app notification settings.
- **Permissions** - Lists the areas on the device that the app has access to.
- **Storage & cache** - Lists how much information is stored and includes buttons for clearing it.
- **Mobile data & Wi-Fi** - Provides information about data consumed by an app.
- **Advanced**
  - **Screen time** - Displays the amount of time the app has displayed on the screen.
  - **Battery** - Lists the amount of computing power used by the app.
  - **Open by default** - If you have configured an app to launch certain file types by default, you can clear that setting here.
  - **Display over other apps** - Allows an app to display on top of other apps.
  - **App details** - Provides a link to additional app details on the Play store.
  - **Additional settings in the app** - Opens settings in the app.
  - **Modify system settings** - Allows an app to modify the system settings.

Managing Downloads

Files and apps downloaded using the Browser or Email are stored on the USB drive or Internal storage in the Download directory. Use the Downloads app to view, open, or delete downloaded items. Files and apps downloaded using the Browser or Email are stored on the microSD card or Internal storage in the Download directory. Use the Downloads app to view, open, or delete downloaded items.

1. Swipe the screen up and touch .
2. Touch ≡ > **Downloads**.
3. Touch and hold an item, select items to delete and touch 🗑. The item is deleted from the device.

Keypad

The MC2200/MC2700 offers one type of keypad configurations: 34 key.

34-Key Keypad

The 34-key keypad contains a Power button, application keys, scroll keys, and function keys. The keypad is color-coded to indicate the alternate function key (orange) values. Note that keypad functions can be changed by an application so the mobile computer keypad may not function as described.

Figure 27 34-Key Keypad

Key and Button Descriptions

The tables below specify key and button descriptions and keypad alternate functions.

Table 27 34-Key Keypad Descriptions

Key	Description
P1 (Program 1)	User programmable.
Scan (yellow)	Used in scanning applications, press to scan a barcode.

Table 27 34-Key Keypad Descriptions (Continued)

Key	Description
P2 (Program 2)	User programmable.
Scroll Keys/Volume keys	Moves up, down, left, or right from one item to another. Increases/decreases specified values. Increases volume when the up arrow with the orange function key is activated. Decreases volume when the down arrow with the orange function key is activated.
ESC	Produces the ESC function.
TAB	Produces the TAB function.
ALT	Produces the ALT function.
CTRL	Press and release the CTRL key to activate the keypad alternate CTRL functions. The C icon appears in the Status bar. A Press and release the CTRL key two times to return to the default keypad functions.
Numeric/Alpha/Special Function	Numeric, alpha or special function keys. Numeric by default. Produces a special function when the orange function key is activated. Produces alpha values when the orange alpha key is activated. In Alpha state, produces the lower case alphabetic characters on the key. Each key press produces the next alphabetic character in sequence. For example, press and release the alpha key and then press the 4 key once to produce the letter 'g'; press and release the alpha key and then press the 4 key three times to produce the letter 'i'. When the SHIFT key is pressed in Alpha state, the upper case alphabetic characters on the key are produced. For example, press and release the alpha key, press and hold the SHIFT key and then press the 4 key once to produce the letter 'G'; press and release the alpha key, press and hold the SHIFT key and then press the 4 key three times to produce the letter 'I'.The 0 key produces a space when the orange function key is activated.
Period/Comma	Produces a period for numeric entries and a comma for alpha entries by default.
Diamond	Provides a 3x3 matrix on the screen with nine additional symbols. With a single tap, you can select via touch input or the keyboard, 1-9 numerical keys. Double-tapping the Diamond key locks the 3x3 grid, and you can select multiple keys. Pressing the Diamond key a third time closes the 3x3 matrix.
BKSP	Backspace function by default.
Shift	Press and release the SHIFT key to activate the keypad alternate SHIFT functions. The icon appears on the Status bar. After pressing another key, the keypad returns to the non-shift state. Press and release the SHIFT key twice to enable the Shift Lock state. The icon appears in the status bar. Press and release the SHIFT key again to disable the Shift Lock state.
Enter	Executes a selected item or function.

Table 27 34-Key Keypad Descriptions (Continued)

Key	Description
F1 - F12	Special function keys by default.
Orange	Press the orange alpha key to access the alternate alpha characters (shown on the keypad in orange). The icon appears on the Status bar. Press and release the orange alpha key again to return to the default keypad functions.
Power (red)	Powers the mobile computer screen on and off (resume and suspend).

Maintenance and Troubleshooting

This section explains how to maintain and troubleshoot the device.

Maintaining the Device

Follow these guidelines to maintain the device properly.

- To avoid scratching the screen, use a Zebra approved capacitive compatible stylus intended for use with a touch-sensitive screen. Never use an actual pen or pencil or other sharp object on the surface of the device screen.
- The touch-sensitive screen of the device is glass. Do not drop the device or subject it to strong impact.
- Protect the device from temperature extremes. Do not leave it on the dashboard of a car on a hot day, and keep it away from heat sources.
- Do not store the device in any location that is dusty, damp, or wet.
- Use a soft lens cloth to clean the device. If the surface of the device screen becomes soiled, clean it with a soft cloth moistened with an approved cleanser.
- Periodically replace the rechargeable battery to ensure maximum battery life and product performance. Battery life depends on individual usage patterns.

Battery Safety Guidelines

To use the device safely, you must follow the battery guidelines.

- The area in which the units are charged should be clear of debris and combustible materials or chemicals. Particular care should be taken where the device is charged in a non-commercial environment.
- Follow battery usage, storage, and charging guidelines found in this guide.
- Improper battery use may result in a fire, explosion, or other hazard.
- To charge the mobile device battery, the ambient battery and charger temperatures must be between +32ºF and +104ºF (0ºC and +40ºC).
- Do not use incompatible batteries and chargers, including non-Zebra batteries and chargers. Use of an incompatible battery or charger may present a risk of fire, explosion, leakage, or other hazard. If you have any questions about the compatibility of a battery or a charger, contact the Global Customer Support Center.

- For devices that utilize a USB port as a charging source, the device shall only be connected to products that bear the USB-IF logo or have completed the USB-IF compliance program.
- Do not disassemble or open, crush, bend or deform, puncture, or shred the battery.
- Severe impact from dropping any battery-operated device on a hard surface could cause the battery to overheat.
- Do not short circuit a battery or allow metallic or conductive objects to contact the battery terminals.
- Do not modify or remanufacture, attempt to insert foreign objects into the battery, immerse or expose to water or other liquids, or expose to fire, explosion, or other hazard.
- Do not leave or store the equipment in or near areas that might get very hot, such as in a parked vehicle or near a radiator or other heat source. Do not place battery into a microwave oven or dryer.
- Battery usage by children should be supervised.
- Please follow local regulations to properly dispose of used rechargeable batteries.
- Do not dispose of batteries in fire.
- In the event of a battery leak, do not allow the liquid to come in contact with the skin or eyes. If contact has been made, wash the affected area with water for 15 minutes, and seek medical advice.
- If you suspect damage to your equipment or battery, contact Customer Support to arrange for inspection.

Cleaning Instructions

CAUTION: Always wear eye protection. Read the warning label on alcohol product before using. If you have to use any other solution for medical reasons please contact the Global Customer Support Center for more information.

WARNING: Avoid exposing this product to contact with hot oil or other flammable liquids. If such exposure occurs, unplug the device and clean the product immediately in accordance with these guidelines.

Approved Cleanser Active Ingredients

100% of the active ingredients in any cleaner must consist of one or some combination of the following: isopropyl alcohol, bleach/sodium hypochlorite[1] (see important note below), hydrogen peroxide, ammonium chloride, or mild dish soap.

IMPORTANT: Use pre-moistened wipes and do not allow liquid cleaner to pool.

Due to the powerful oxidizing nature of sodium hypochlorite, the metal surfaces on the device are prone to oxidation (corrosion) when exposed to this chemical in the liquid form (including wipes). In the event that these type of disinfectants come in contact with metal on the device, prompt removal with an alcohol-dampened cloth or cotton swab after the cleaning step is critical.

Approved cleaners include:

- Purell Ethanol Wipes

[1] When using sodium hypochlorite (bleach) based products, always follow the manufacturer's recommended instructions: use gloves during application and remove the residue afterwards with a damp alcohol cloth or a cotton swab to avoid prolonged skin contact while handling the device.

- 409 Glass Cleaner
- Windex Blue

Harmful Ingredients

The following chemicals are known to damage the plastics on the device and should not come in contact with the device: acetone; ketones; ethers; aromatic and chlorinated hydrocarbons; aqueous or alcoholic alkaline solutions; ethanolamine; toluene; trichloroethylene; benzene; carbolic acid and TB-lysoform.

Many vinyl gloves contain phthalate additives, which are often not recommended for medical use and are known to be harmful to the housing of the device.

Device Cleaning Instructions

Do not apply liquid directly to the device. Dampen a soft cloth or use pre-moistened wipes. Do not wrap the device in the cloth or wipe, instead gently wipe the unit. Be careful not to let liquid pool around the display window or other places. Before use, allow the unit to air dry.

NOTE: For thorough cleaning, it is recommended to first remove all accessory attachments, such as hand straps or cradle cups from the mobile device and to clean them separately.

Special Cleaning Notes

Do not handle the device while wearing vinyl gloves containing phthalates. Remove vinyl gloves and wash hands to eliminate any residue left from the gloves.

If products containing any of the harmful ingredients listed above are used prior to handling the device, such as a hand sanitizer that contains ethanolamine, hands must be completely dry before handling the device to prevent damage to the device.

IMPORTANT: If the battery connectors are exposed to cleaning agents, thoroughly wipe off as much of the chemical as possible and clean with an alcohol wipe. It is also recommended to install the battery in the terminal prior to cleaning and disinfecting the device to help minimize buildup on the connectors. When using cleaning/disinfectant agents on the device, it is important to follow the directions prescribed by the cleaning/disinfectant agent manufacturer.

Cleaning Materials Required

- Alcohol wipes
- Lens tissue
- Cotton-tipped applicators
- Isopropyl alcohol
- Can of compressed air with a tube.

Cleaning Frequency

The cleaning frequency is at the customer’s discretion due to the varied environments in which the mobile devices are used and may be cleaned as frequently as required. When dirt is visible, it is recommended to

clean the mobile device to avoid the build-up of particles, which makes the device more difficult to clean later on.

For consistency and optimum image capture, it is recommended to clean the camera window periodically especially when used in environments prone to dirt or dust.

Cleaning the Device

This section describes how to clean the housing, display, and camera for the device.

Housing

Thoroughly wipe the housing, including all buttons and triggers, using an approved alcohol wipe.

Display

The display can be wiped down with an approved alcohol wipe, but care should be taken not to allow any pooling of liquid around the edges of the display. Immediately dry the display with a soft, non-abrasive cloth to prevent streaking.

Camera and Exit Window

Wipe the camera and exit window periodically with lens tissue or other material suitable for cleaning optical material such as eyeglasses.

Cleaning Battery Connectors

1. Remove the main battery from the mobile computer.
2. Dip the cotton portion of the cotton-tipped applicator in isopropyl alcohol.
3. To remove any grease or dirt, rub the cotton portion of the cotton-tipped applicator back-and-forth across the connectors on the battery and terminal sides. Do not leave any cotton residue on the connectors.
4. Repeat at least three times.
5. Use a dry cotton-tipped applicator and repeat steps 3 and 4. Do not leave any cotton residue on the connectors.
6. Inspect the area for any grease or dirt and repeat the cleaning process if necessary.

CAUTION: After cleaning the battery connectors with bleach-based chemicals, follow the Battery Connector Cleaning instructions to remove bleach from the connectors.

Cleaning Cradle Connectors

1. Remove the DC power cable from the cradle.
2. Dip the cotton portion of the cotton-tipped applicator in isopropyl alcohol.

3. Rub the cotton portion of the cotton-tipped applicator along the pins of the connector. Slowly move the applicator back-and-forth from one side of the connector to the other. Do not leave any cotton residue on the connector.
4. All sides of the connector should also be rubbed with the cotton-tipped applicator.
5. Remove any lint left by the cotton-tipped applicator.
6. If grease and other dirt can be found on other areas of the cradle, use a lint-free cloth and alcohol to remove.
7. Allow at least 10 to 30 minutes (depending on ambient temperature and humidity) for the alcohol to air dry before applying power to cradle.

   If the temperature is low and humidity is high, longer drying time is required. Warm temperature and low humidity requires less drying time.

CAUTION: After cleaning the cradle connectors with bleach-based chemicals, follow the Cleaning Cradle Connectors instructions to remove bleach from the connectors.

Troubleshooting

In rare circumstances, to troubleshoot the device, you may need to reset the device.

Resetting the Device

This section describes options to reset the device.

There are four reset functions:

- Soft reset
- Hard reset
- Enterprise reset. See Android Enterprise Reset.
- Factory reset. See Android Factory Reset on page 147.

Performing a Soft Reset

Perform a soft reset if applications stop responding.

1. Press and hold the Power button until the menu appears.
2. Touch **Restart**.

   The device reboots.

Performing a Hard Reset

Perform a hard reset if the device stops responding.

CAUTION: Performing a hard reset with a USB drive installed in the device may cause damage or data corruption to the USB drive.

1. Press and hold the Power button for at least 16 seconds.

2. Release the Power button when the Zebra logo appears.

   The device reboots.

Troubleshooting the Device

Table 28 Troubleshooting the Device

Problem	Cause	Solution
After installing the battery, the device does not boot up.	Power button was not pressed.	Press the Power button.
When pressing the power button, the device does not turn on.	Battery not charged.	Charge or replace the battery in the device.
	Battery not installed properly.	Install the battery properly.
	System crash.	Perform a reset.
When pressing the power button, the device does not turn on but two LEDs blink.	Battery charge is at a level where data is maintained but battery should be re-charged.	Charge or replace the battery in the device.
Battery did not charge.	Battery failed.	Replace battery. If the device still does not operate, perform a reset.
	Device removed from cradle while battery was charging.	Insert device in cradle.
	Extreme battery temperature.	Battery does not charge if ambient temperature is below 5°C to 40°C (41°F to 104°F).
Cannot see characters on display.	Device not powered on.	Press the **Power** button.
During data communication with a host computer, no data transmitted, or transmitted data was incomplete.	Device removed from cradle or disconnected from host computer during communication.	Replace the device in the cradle, or reattach the communication cable and re-transmit.
	Incorrect cable configuration.	See the system administrator.
	Communication software was incorrectly installed or configured.	Perform setup.
During data communication over Wi-Fi, no data transmitted, or transmitted data was incomplete.	Wi-Fi radio is not on.	Turn on the Wi-Fi radio.
	You moved out of range of an access point.	Move closer to an access point.

Table 28 Troubleshooting the Device (Continued)

Problem	Cause	Solution
During data communication over Bluetooth, no data transmitted, or transmitted data was incomplete.	Bluetooth radio is not on.	Turn on the Bluetooth radio.
	You moved out of range of another Bluetooth device.	Move within 10 meters (32.8 feet) of the other device.
During data communication over mobile data, no data transmitted, or transmitted data was incomplete.	Mobile data is not on.	Turn on mobile data. If it is already on, turn it off and on again.
	You moved out of the coverage area.	Move into a coverage area.
No sound.	Volume setting is low or turned off.	Adjust the volume.
Device shuts off.	Device is inactive.	The display turns off after a period of inactivity. Set this period to 15 seconds, 30 seconds, 1, 2, 5, 10 or 30 minutes.
	Battery is depleted.	Replace the battery.
Tapping the window buttons or icons does not activate the corresponding feature.	The device is not responding.	Reboot the device.
A message appears stating that the device memory is full.	Too many files stored on the device.	Delete unused memos and records. If necessary, save these records on the host computer (or use an SD card for additional memory).
	Too many applications installed on the device.	Remove user-installed applications on the device to recover memory. Select **Settings** > **Apps & notifications**. Select the app in the list and select **UNINSTALL**.
The device does not decode with reading barcode.	Scanning application is not loaded.	Load a scanning application on the device or enable DataWedge. See the system administrator.
	Unreadable bar code.	Ensure the symbol is not defaced.
	Distance between exit window and bar code is incorrect.	Place the device within proper scanning range.
	Device is not programmed for the bar code.	Program the device to accept the type of bar code being scanned. Refer to the EMDK or DataWedge application.
	Device is not programmed to generate a beep.	If the device does not beep on a good decode, set the application to generate a beep on good decode.
	Battery is low.	If the scanner stops emitting a laser beam upon a trigger press, check the battery level. When the battery is low, the scanner shuts off before the device low battery condition notification. Note: If the scanner is still not reading symbols, contact the distributor or the Global Customer Support Center.

Table 28 Troubleshooting the Device (Continued)

Problem	Cause	Solution
Device cannot find any Bluetooth devices nearby.	Too far from other Bluetooth devices.	Move closer to the other Bluetooth device(s) within a range of 10 meters (32.8 feet).
	The Bluetooth device(s) nearby are not turned on.	Turn on the Bluetooth device(s) to find.
	The Bluetooth device(s) are not in discoverable mode.	Set the Bluetooth device(s) to discoverable mode. If needed, refer to the device's user documentation for help.
Cannot unlock device.	User enters incorrect password.	If the user enters an incorrect password five times, the user is requested to wait for 30 seconds when using a PIN, Pattern or Password.
Multi-User mode is causing undefined behavior.	Multi-User mode is not supported by the Mobility DNA Enterprise License.	Perform a soft or hard reset on the device.

1-Slot Charge/USB Cradle Troubleshooting

Table 29 Troubleshooting the 1-Slot Charge/USB Cradle

Symptom	Possible Cause	Action
LEDs do not light when device is inserted.	Cradle is not receiving power.	Ensure the power cable is connected securely to both the cradle and to AC power.
	Device is not seated firmly in the cradle.	Remove and re-insert the device into the cradle, ensuring it is firmly seated.
Device battery is not charging.	Device was removed from cradle or cradle was unplugged from AC power too soon.	Ensure cradle is receiving power. Ensure device is seated correctly. Confirm main battery is charging. The standard battery charges from fully depleted to 90% in approximately three hours. The extended battery charges from fully depleted to 90% in less than three and a half hours.
	Battery is faulty.	Verify that other batteries charge properly. If so, replace the faulty battery.
	The device is not fully seated in the cradle.	Remove and re-insert the device into the cradle, ensuring it is firmly seated.
	Extreme battery temperature.	Battery does not charge if ambient temperature is below 5°C (41°F) or above 40°C (104°F).

1-Slot Charge/Communication Cradle with Spare Battery Charger Troubleshooting

Table 30 Troubleshooting the 1-Slot Charge/Communication Cradle with Spare Battery Charger

Symptom	Possible Cause	Action
LEDs do not light when device is inserted.	Cradle is not receiving power.	Ensure the power cable is connected securely to both the cradle and to AC power.
	Device is not seated firmly in the cradle.	Remove and re-insert the device into the cradle, ensuring it is firmly seated.
Device battery is not charging.	Device was removed from cradle or cradle was unplugged from AC power too soon.	Ensure cradle is receiving power. Ensure device is seated correctly. Confirm main battery is charging. The standard battery charges from fully depleted to 90% in approximately three hours. The extended battery charges from fully depleted to 90% in less than three and a half hours.
	Battery is faulty.	Verify that other batteries charge properly. If so, replace the faulty battery.
	The device is not fully seated in the cradle.	Remove and re-insert the device into the cradle, ensuring it is firmly seated.
	Extreme battery temperature.	Battery does not charge if ambient temperature is below 5°C (41°F) or above 40°C (104°F).
During communication, no data transmits, or transmitted data was incomplete.	Device removed from cradle during communications.	Replace device in cradle and retransmit.
	Incorrect cable configuration.	Ensure that the correct cable configuration.
	Device has no active connection.	An icon is visible in the status bar if a connection is currently active.

4-Slot Charge Only ShareCradle with Battery Charger Troubleshooting

Table 31 Troubleshooting the 4-Slot Charge Only ShareCradle with Battery Charger

Problem	Cause	Solution
Battery is not charging.	Device removed from the cradle too soon.	Replace the device in the cradle. The standard battery charges from fully depleted to 90% in approximately three hours. The extended battery charges from fully depleted to 90% in less than three and a half hours.
	Battery is faulty.	Verify that other batteries charge properly. If so, replace the faulty battery.
	Device is not inserted correctly in the cradle.	Remove the device and reinsert it correctly. Verify charging is active. Touch ⚙ > **System** > **About phone** > **Status** to view battery status.
	Ambient temperature of the cradle is too warm.	Move the cradle to an area where the ambient temperature is between 5°C (41°F) and 40°C (104°F).

Table 31 Troubleshooting the 4-Slot Charge Only ShareCradle with Battery Charger (Continued)

Problem	Cause	Solution
Spare Battery Charging LED does not light when spare battery is inserted.	Spare battery is not correctly seated.	Remove and re-insert the spare battery into the charging slot, ensuring it is correctly seated.
Spare Battery not charging.	Charger is not receiving power.	Ensure the power cable is connected securely to both the charger and to AC power.
	Spare battery is not correctly seated.	Remove and re-insert the battery into the battery adapter, ensuring it is correctly seated.
	Battery adapter is not seated properly.	Remove and re-insert the battery adapter into the charger, ensuring it is correctly seated.
	Battery was removed from the charger or charger was unplugged from AC power too soon.	Ensure charger is receiving power. Ensure the spare battery is seated correctly. The standard battery charges from fully depleted to 90% in approximately three hours. The extended battery charges from fully depleted to 90% in less than three and a half hours.
	Battery is faulty.	Verify that other batteries charge properly. If so, replace the faulty battery.

5-Slot Charge Only ShareCradle Troubleshooting

Table 32 Troubleshooting the 5-Slot Charge Only ShareCradle

Problem	Cause	Solution
Battery is not charging.	Device removed from the cradle too soon.	Replace the device in the cradle. The standard battery charges from fully depleted to 90% in approximately three hours. The extended battery charges from fully depleted to 90% in less than three and a half hours.
	Battery is faulty.	Verify that other batteries charge properly. If so, replace the faulty battery.
	Device is not inserted correctly in the cradle.	Remove the device and reinsert it correctly. Verify charging is active. Touch ⚙ > **System** > **About phone** > **Status** to view battery status.
	Ambient temperature of the cradle is too warm.	Move the cradle to an area where the ambient temperature is between 5°C (41°F) and 40°C (104°F).

4-Slot Battery Charger Troubleshooting

Table 33 Troubleshooting the 4-Slot Battery Charger

Problem	Cause	Solution
Spare Battery Charging LED does not light when spare battery is inserted.	Spare battery is not correctly seated.	Remove and re-insert the spare battery into the charging slot, ensuring it is correctly seated.
Spare Battery not charging.	Charger is not receiving power.	Ensure the power cable is connected securely to both the charger and to AC power.
	Spare battery is not correctly seated.	Remove and re-insert the battery into the battery adapter, ensuring it is correctly seated.
	Battery adapter is not seated properly.	Remove and re-insert the battery adapter into the charger, ensuring it is correctly seated.
	Battery was removed from the charger or charger was unplugged from AC power too soon.	Ensure charger is receiving power. Ensure the spare battery is seated correctly. The standard battery charges from fully depleted to 90% in approximately three hours. The extended battery charges from fully depleted to 90% in less than three and a half hours.
	Battery is faulty.	Verify that other batteries charge properly. If so, replace the faulty battery.

Technical Specifications

For device technical specifications, go to https://www.zebra.com/us/en/products/spec-sheets/mobile-computers/handheld/mc2200-mc2700.html.

Data Capture Supported Symbologies

Table 34 Data Capture Supported Symbologies

Item	Description
1D Bar Codes	Chinese 2 of 5, Codabar, Code 11, Code 128, Code 39, Code 93, Discrete 2 of 5, EAN-13, EAN-8, Interleaved 2 of 5, MSI, UPCA, UPCE, UPCE1, ISBN/Bookland, ISSN, Coupon Code, Matrix 2 of 5
2D Bar Codes	Australian Post, Aztec Code, Canada Postal, Composite AB, Composite C, DataMatrix, Dutch Postal, GS1 DataBar, GS1 Expanded, GS1 Limited, GS1 Datamatrix, Han Xin, Japan Postal, Maxicode, Micro PDF, Micro QR Code, PDF-417, QR Code, TLC-39, PDF-417, UK Postal, US4state, US4State FICS, US Planet, US Postnet

Decode Distances

The table lists the typical distances for selected bar code densities. The minimum element width (or “symbol density”) is the width in mils of the narrowest element (bar or space) in the symbol.

Table 35 SE4100 Decode Distances

Bar Code Type	Near Distance	Far Distance
	Typical	Typical
5 milCode 39	2.4 in / 6.1 cm	9.5 in / 24.1 cm
5 milCode 128	2.8 in / 7.1 cm	9.0 in / 22.9 cm
6.7 milPDF417	2.4 in / 6.1 cm	8.0 in / 20.3 cm
100% UPCA	1.8 in / 4.6 cm*	19.5 in / 49.5 cm
10 milData Matrix	2.9 in / 7.4 cm	8.5 in / 21.6 cm
20 milCode 39	2.5 in / 5.1 cm	26.0 in / 66.0 cm
15 milQR Code	1.2 in / 3.1 cm	11.5 in / 29.2 cm

Table 35 SE4100 Decode Distances (Continued)

Bar Code Type	Near Distance	Far Distance
	Typical	Typical
20 milQR Code	1.2 in / 3.1 cm	14.0 in / 35.6 cm

*Limited by width of barcode in field of view.

NOTE: Photographic quality barcode at 18° tilt pitch angle under 30 fcd ambient illumination

NOTE: UPC, 20mil code 39, 15mil QR, and 20mil QR near distances correspond to the barcode located in the overlapping region of illumination and imaging fields of view.

1-Slot Charge/USB Cradle Technical Specifications

Table 36 1-Slot Charge/USB Cradle Technical Specifications

Item	Description
Dimensions	Height: 9.0 cm (3.54 in.) Width: 10.7 cm (4.21 in.) Depth: 13.2 cm (5.2 in.) excluding cable
Weight	195 g (6.88 oz.)
Input Voltage	5 Vdc via PWR-WUA5V12W0xx 5 Vdc 2.5 A adapter
Power Consumption	up to 15 watts
Operating Temperature	0°C to 50°C (32°F to 122°F)
Storage Temperature	-40°C to 70°C (-40°F to 158°F)
Charging Temperature	0°C to 40°C (32°F to 104°F)
Humidity	5% to 95% non-condensing
Drop	76.2 cm (30.0 in.) drops to vinyl tiled concrete at room temperature.
Electrostatic Discharge (ESD)	+/- 15 kV air +/- 8 kV contact +/- 8 kV indirect discharge

1-Slot Charge/Communication Cradle with Spare Battery Charger Technical Specifications

Table 37 1-Slot Charge/Communication Cradle with Spare Battery ChargerTechnical Specifications

Item	Description
Dimensions	Height: 11.0 cm (4.33 in.) Width: 9.8 cm (3.86 in.) Depth: 12.9 cm (5.08 in.)
Weight	282 g (9.95 oz.)
Input Voltage	12 VDC (power supply PWR-BGA12V50W0WW, cable CBL-DC-388A1-01, and line cord sold separately)
Power Consumption	up to 15 watts
Ethernet	Via MOD-MT2-EU1-01 accessory (sold separately).
USB Interface	Micro A or micro B cable assembly compatible.
Operating Temperature	0°C to 50°C (32°F to 122°F)
Storage Temperature	-40°C to 70°C (-40°F to 158°F)
Charging Temperature	0°C to 40°C (32°F to 104°F)
Humidity	5% to 95% non-condensing
Drop	76.2 cm (30.0 in.) drops to vinyl tiled concrete at room temperature.
Electrostatic Discharge (ESD)	+/- 15 kV air +/- 8 kV contact +/- 8 kV indirect discharge

4-Slot Charge Only ShareCradle with 4-Slot Battery Charger Technical Specifications

Table 38 4-Slot Charge Only ShareCradle with 4-Slot Battery Charger Technical Specifications

Item	Description
Dimensions	Height: 11.1 cm (4.37 in.) Width: 48.9 cm (19.25 in.) Depth: 13.3 cm (5.24 in.)
Weight	2100 g (74.08 oz.)
Input Voltage	12 VDC (power supply PWR-BGA12V108W0WW, cable CBL-DC-381A1-01, and line cord sold separately)
Power Consumption	up to 95 watts
Operating Temperature	0°C to 50°C (32°F to 122°F)

Table 38 4-Slot Charge Only ShareCradle with 4-Slot Battery Charger Technical Specifications (Continued)

Item	Description
Storage Temperature	-40°C to 70°C (-40°F to 158°F)
Charging Temperature	0°C to 40°C (32°F to 104°F)
Humidity	0% to 95% non-condensing
Drop	76.2 cm (30.0 in.) drops to vinyl tiled concrete at room temperature.
Electrostatic Discharge (ESD)	+/- 15 kV air +/- 8 kV contact +/- 8 kV indirect discharge

5-Slot Charge Only ShareCradle Technical Specifications

Table 39 5-Slot Charge Only ShareCradle Technical Specifications

Item	Description
Dimensions	Height: 11.1 cm (4.37 in.) Width: 48.9 cm (19.25 in.) Depth: 13.3 cm (5.24 in.)
Weight	1980 g (69.84 oz.)
Input Voltage	12 VDC (power supply PWR-BGA12V108W0WW, cable CBL-DC-381A1-01, and line cord sold separately)
Power Consumption	up to 65 watts
Operating Temperature	0°C to 50°C (32°F to 122°F)
Storage Temperature	-40°C to 70°C (-40°F to 158°F)
Charging Temperature	0°C to 40°C (32°F to 104°F)
Humidity	0% to 95% non-condensing
Drop	76.2 cm (30.0 in.) drops to vinyl tiled concrete at room temperature.
Electrostatic Discharge (ESD)	+/- 15 kV air +/- 8 kV contact +/- 8 kV indirect discharge

4-Slot Battery Charger Technical Specifications

Table 40 4–Slot Battery Charger Technical Specifications

Item	Description
Dimensions	Height: 14.3 cm (5.63 in.) excluding base Width: 9.8 cm (3.86 in.) Depth: 15.0 cm (5.91 in.)
Weight	570 g (20.11 oz.)
Input Voltage	12 VDC (power supply PWR-BGA12V50W0WW, cable CBL-DC-388A1-01, and line cord sold separately)
Power Consumption	up to 48 watts
Operating Temperature	0°C to 50°C (32°F to 122°F)
Storage Temperature	-40°C to 70°C (-40°F to 158°F)
Charging Temperature	0°C to 40°C (32°F to 104°F)
Humidity	5% to 95% non-condensing
Drop	76.2 cm (30.0 in.) drops to vinyl tiled concrete at room temperature.
Electrostatic Discharge (ESD)	+/- 15 kV air +/- 8 kV contact +/- 8 kV indirect discharge

Trigger Handle Technical Specifications

Table 41 Trigger Handle Technical Specifications

Item	Description
Dimensions (including common handle and adapter)	Height: 15.7 cm (6.18 in.) Width: 7.6 cm (2.99 in.) Depth: 9.3 cm (3.66 in.)
Weight (including common handle and adapter)	102 g (3.60 oz.)
Operating Temperature	-10°C to 50°C (14°F to 122°F)
Storage Temperature	-40°C to 70°C (-40°F to 158°F)
Humidity	5% to 95% non-condensing
Drop	1.8 m (6 feet) drops to concrete over temperature range.
Electrostatic Discharge (ESD)	+/- 15 kV air +/- 8 kV contact +/- 8 kV indirect discharge