Mobile Barcode Printer

Alpha-30L(HC)/40L Series

Direct Thermal

Series Models

Alpha-30L/ Alpha-40L

User Manual

www.tscprinters.com

Trademark and Copyright Notice

©2025 TSC Auto ID Technology Co., Ltd.

All trademarks mentioned in this document are the property of their respective owners. TSC is a trademark of TSC Auto ID Technology Co., Ltd., registered in many jurisdictions worldwide. Unauthorized reproduction or use of these trademarks, or any part of this document, is strictly prohibited.

Product Improvements and Updates

TSC Auto ID continuously strives to improve our products. All specifications, features, and designs are subject to change without notice as part of our ongoing product enhancement initiatives. It is recommended to regularly consult the latest documentation to ensure the most up-to-date information is being used. Product users should validate that any new specifications or feature updates for compatibility with their existing applications before implementation.

Proprietary Information and Confidentiality

This manual contains proprietary information of TSC Auto ID Technology Co., Ltd. (TSC), which is intended solely for the use of parties operating and maintaining the equipment described herein. Such proprietary information must not be used, reproduced, or disclosed to any third party for any purpose without the express written permission of TSC.

Disclaimer

While TSC Auto ID makes every effort to ensure the accuracy of the information contained in our specifications and manuals, errors may still occur. TSC Auto ID reserves the right to correct any errors, and disclaims any liability caused by such errors. The information provided in this document is for reference only and does not constitute a guarantee of performance or suitability for any particular application.

Limitation of Liability

TSC Auto ID is not responsible for any direct, indirect, incidental, or consequential damages arising from the use, inability to use, or performance of our products. This includes, but is not limited to, business losses, interruptions, or the loss of business data, even if TSC was advised of the possibility of such damages.
Some jurisdictions may not permit the exclusion of incidental or consequential damages, so the limitations and exclusions outlined here may not apply to you.

User Responsibility

It is the responsibility of the user to comply with all relevant laws and licensing agreements when using this document and the associated products. TSC Auto ID disclaims responsibility for any consequences arising from improper usage or unauthorized modifications to the products.

Security and System Integrity

TSC Auto ID is not responsible for security vulnerabilities introduced through third-party software, unauthorized file uploads, or improper system configurations via any access path. Users are responsible for implementing appropriate security measures to prevent potential risks. TSC Auto ID is not liable for any malfunctions, disruptions, or security issues resulting from such actions.

Contents

1. Introduction 1

1.1 Product Specifications 2

1.2 Battery Information 5

2. Operation Overview 6

2.1 Unpacking and Inspection 6

2.2 Printer Overview 7

2.3 Controls and Indicators 10

3. Setup 13

3.1 Setting up the Printer 13

3.2 Charging the Smart Battery 14

3.3 Loading the Media 19

3.4 Loading the Media in Peel-off Mode 21

3.5 Loading the External Media 23

3.6 Installing the Belt Clip 24

3.7 Installing the IP54-rated environmental case with shoulder strap (Optional) 25

3.8 Connecting to the Printer 26

4. LCD Menu Function 27

4.1 How to Use the LCD to Set the Printer 27
4.2 Main Menu Overview 28
4.3 TSPL 29
4.4 ZPL2 31
4.5 Sensor 33
4.6 Interface 34
4.7 File Manager 35
4.8 Diagnostic 36
4.9 Advanced 37
5. TSC Console Utility 39
6. Troubleshooting 40
7. Maintenance 42
8. Agency Compliance and Approvals 44
Revision History 49

1. Introduction

Thank you very much for purchasing TSC bar code printer.

TSC's new mobile barcode label printers, the Alpha-30L(HC) and Alpha-40L are user-friendly, heavy-duty and drop-resistant. The new mobile printers propel you into the next generation of smart, enhanced technology solutions for industrial-grade label printing ting applications.

With the Apple-certified MFi Bluetooth® 5.0 connection and 802.11 a/b/g/n/ac Wi-Fi fast roaming features, the Alpha-30L(HC) andAlpha-40L not only provide reliable and seamless communication with users' devices, they also securely print labels wherever they are needed.

This document provides an easy reference for operating this printer. TSC printers include the Windows labeling software for creating your label template. For system integration, the TSPL/TSPL2 printer programming manual or SDKs can be found on TSC website at: https://www.tscprinters.com.

1.1 Product Specifications

Item (HC: Healthcare)	Alpha-30L(HC)	Alpha-40L
Resolution	8 dots/mm (203 dpi)	
Printing method	Direct thermal	
Max. print speed	Up to 127mm (5")/second	
Max. print width	72mm (2.83")	104mm (4.09")
Max. print length	2,794mm (110")	
Enclosure	■ Plastic with rubber over molded ■ Disinfectant-ready plastic, designed with an easy-to-clean surface and a sealed button interface (for healthcare models only) ■ Antibacterial enclosure (for healthcare models only)	Plastic with rubber over molded
Physical dimension	117mm (W) x 173mm (H) x 79mm (D) 4.61" (W) x 6.81" (H) x 3.11" (D)	160mm (W) x 191mm (H) x 79mm (D) 6.3" (W) x 7.52" (H) x 3.11" (D)
Weight (Including battery)	745g (1.64lbs)	985g (2.17lbs)
Drop specification	1.8m (6ft), with protective case can be 2.5m (8.2ft)	
IP rating	IP54 (without case, paper path is excluded)	
Max. roll capacity	67mm (2.64") OD	
Processor	32-bit RISC CPU	
Memory	■ Standard: 128 MB SDRAM, 128 MB Flash, microSD card reader for Flash memory expansion, up to 32 GB ■ Factory Option: 256 MB SDRAM, 512 MB Flash	
Power	7.4V DC, 3,030 mAh Li-ion rechargeable smart battery	7.4V DC, 6,200 mAh Li-ion rechargeable smart battery
Interface	Either one selected ■ Type C USB 2.0 + MFi Bluetooth 5.0 + Passive NFC tag ■ Type C USB 2.0 + 802.11 a/b/g/n/ac Wi-Fi with Bluetooth 5.0 + Passive NFC tag ＊ Type C is for communication only.	
Operation switch, button	7 buttons (Power, Feed/Enter, Menu, Navigation keys)	
User interface	■ 2 LED indicators (battery charging status, printer status) ■ 2.3” color LCD display, 320 x 240 pixels	
Sensors	■ Reflective sensor ■ Transmissive sensor ■ Peel sensor ■ Head open sensor	

Item (HC: Healthcare)	Alpha-30L(HC)	Alpha-40L
Real time clock	Standard	
Internal font	■ 8 alpha-numeric bitmap fonts ■ Monotype Imaging® true type font engine with one CG Triumvirate Bold Condensed scalable font	
Bar code	■ 1D bar code: Code128UCC, Code128 subsets A、B、C, EAN128, Interleaved 2 of 5, Interleaved 2 of 5 with check digit, Standard 2 of 5, Industrial 2 of 5, Code39, Code39 with check digit, Code93, EAN13, EAN8, UPCA, UPCE, EAN and UPC 2 (5) digits add-on, Codabar, Postnet, MSI, MSI with check digit, PLESSEY, China post, ITF14, EAN14, Code11, TELEPEN, TELEPEN number, PLANET, Code49, Deutsche Post Identcode, Deutsche Post Leitcode, LOGMARS ■ 2D bar code: CODABLOCK F mode, GS1 DataBar, GS1 DataMatrix, Maxicode, AZTEC, PDF417, QR Code, Micro PDF417, TLC39, rMQR Code	
Printer language	TSPL-EZC (EPL2, ZPL2, CPCL), or ESC-POS	
Media type	Die cut, black mark, receipt, fan-fold, linerless, continuous (outside wound)	
Media thickness	0.06mm - 0.16mm (2.36mil - 6.3mil)	
Media width	25.4mm - 80mm (1" - 3.15") with liner	50.8mm - 112mm (2" - 4.4") with liner
Media core diameter	Standard: 12.7mm (0.5") Optional: ◆ 19.1mm (0.75") ◆ 25.4mm + 38.1mm (1" + 1.5")	
Label length	■ 12.7 - 2,794mm (0.5” - 110”) ■ 25.4 - 152.4mm (1” - 6”) for peeler mode	
Environment condition	■ Operation: -20 - 50˚C (-4 - 122˚F), 10 - 90% non-condensing ■ Storage: -30 - 70˚C (-22 - 158˚F), 10 - 90% non-condensing ■ Charging: 0 - 40˚C (32 - 104˚F), 10 - 90% non-condensing	
Environmental concern	Comply with RoHS, WEEE, REACH, China RoHS	
Factory option	■ Media sensor position (default center, right, or left side) ■ Linerless kit	
User option	■ Type C USB 2.0 cable ■ 0.75" media core adaptor ■ 1" + 1.5" media core adaptor ■ Protective case with shoulder strap ■ Shoulder strap ■ Li-ion smart battery ■ 1-slot docking cradle ■ 4-slot docking cradle ■ 1-slot battery charger	

Item (HC: Healthcare)	Alpha-30L(HC)	Alpha-40L
	■ 4-slot battery charger ■ 4-slot battery charger IEC 60601-1 certified power adaptor (for healthcare models) ■ 12-24V DC vehicle power adaptor ■ 12-60V DC vehicle power adaptor ■ 12-60V DC vehicle open end power supply ■ 12-48V DC power source with battery eliminator ■ 12-48V wire to wire battery eliminator with power supply ■ Wire to wire dummy battery pack ■ Vehicle mount adaptor can be used with RAM® MOUNTS ■ Quick release vehicle mount kit ■ External fanfold media holder with expansion kit ■ External fanfold media holder with quick release vehicle mount kit	

1.2 Battery Information

Model	Capacity	Cycle life	Warning conditions	Charging hours	Working hours
Alpha-30L(HC)	3030 mAh	500 times	**GOOD**: Discharged count <= 550 or absolute battery capacity >= 70%. **REPLACE**: 550 < Discharged count <= 600 or 67% =< absolute battery capacity < 70%. **UNUSABLE**: 600 < Discharged count or absolute battery capacity < 67%.	3.5 - 5 hrs	23.5 hrs - 12.5% printing ratio - 1 label per two minutes - Bluetooth
Alpha-40L	6200 mAh	500 times		4.5 - 6.5 hrs	45 hrs - 12.5% printing ratio - 1 label per two minutes - Bluetooth

2. Operation Overview

2.1 Unpacking and Inspection

This printer has been specially packaged to withstand damage during shipping. Please carefully inspect the packaging and printer upon receiving the bar code printer. Please retain the packaging materials in case you need to reship the printer.

Unpacking the printer, the following items are included in the carton.

- One printer unit
- One Li-ion battery
- One quick installation guide
- One auto-switching AC adapter
- One belt clip

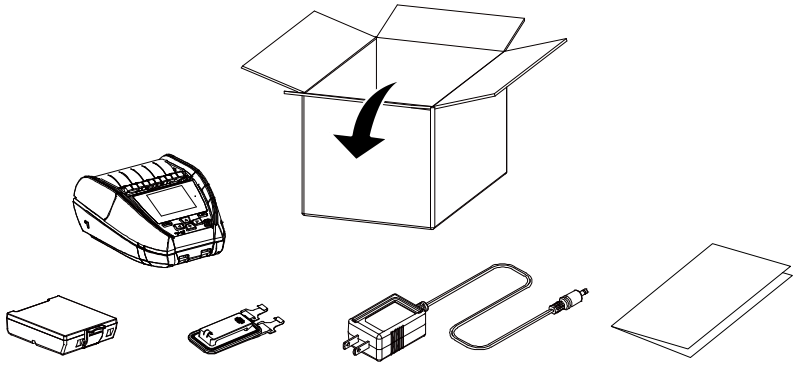

If any parts are missing, please contact the Customer Service Department of your purchased reseller or distributor.

2.2 Printer Overview

Front View

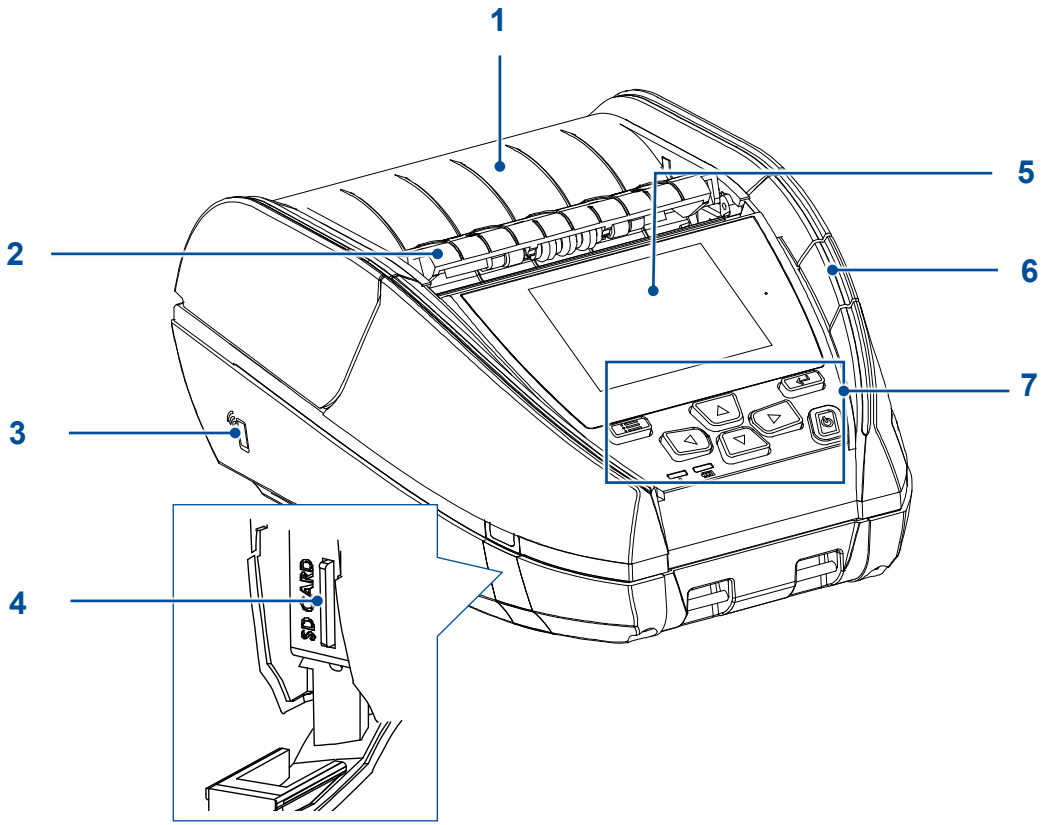

1. Media cover
2. Peeler module
3. NFC touch point
4. MicroSD card socket
5. LCD screen
6. Media cover release button
7. Buttons / LED indicators

Interior View

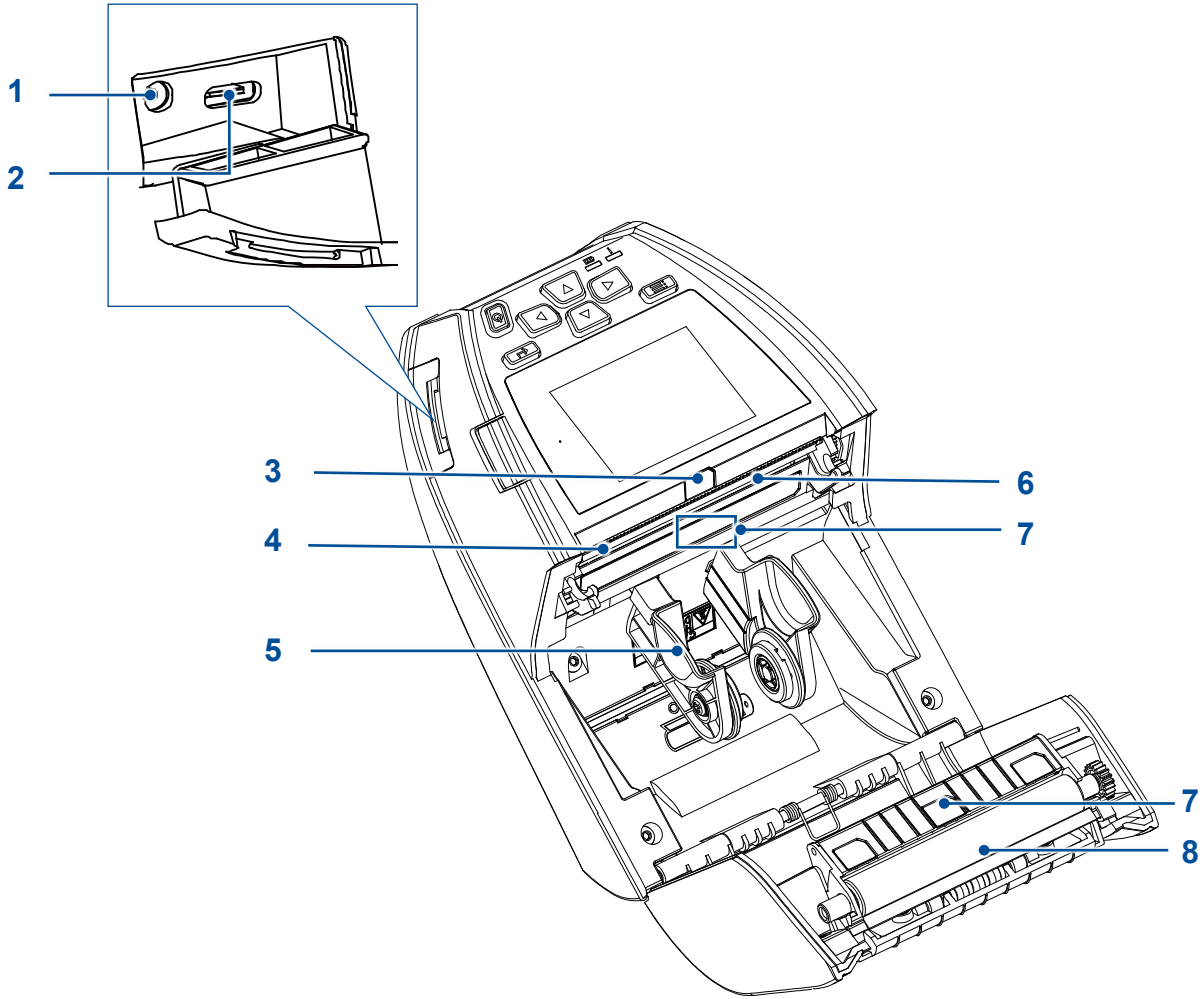

1. Power jack
2. Type C interface
3. Peeler sensor
4. Tear bar
5. Media holder
6. Printhead
7. Gap/Black mark sensors
8. Platen roller

Rear View

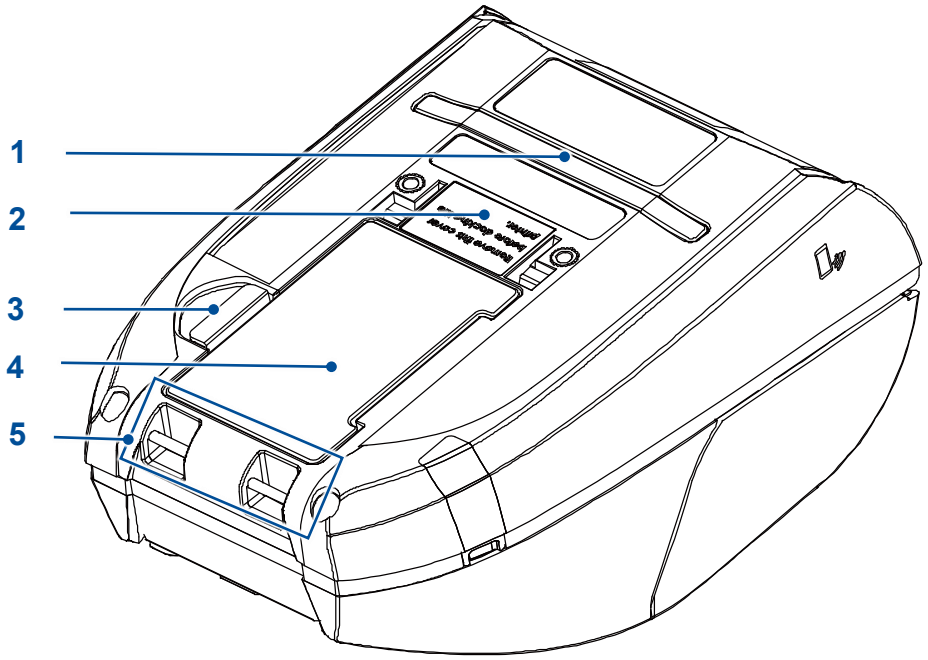

1. External label entrance chute
2. Charging position for docking cradle
3. Battery open clasp
4. Li-ion battery
5. Installation location for belt clip

2.3 Controls and Indicators

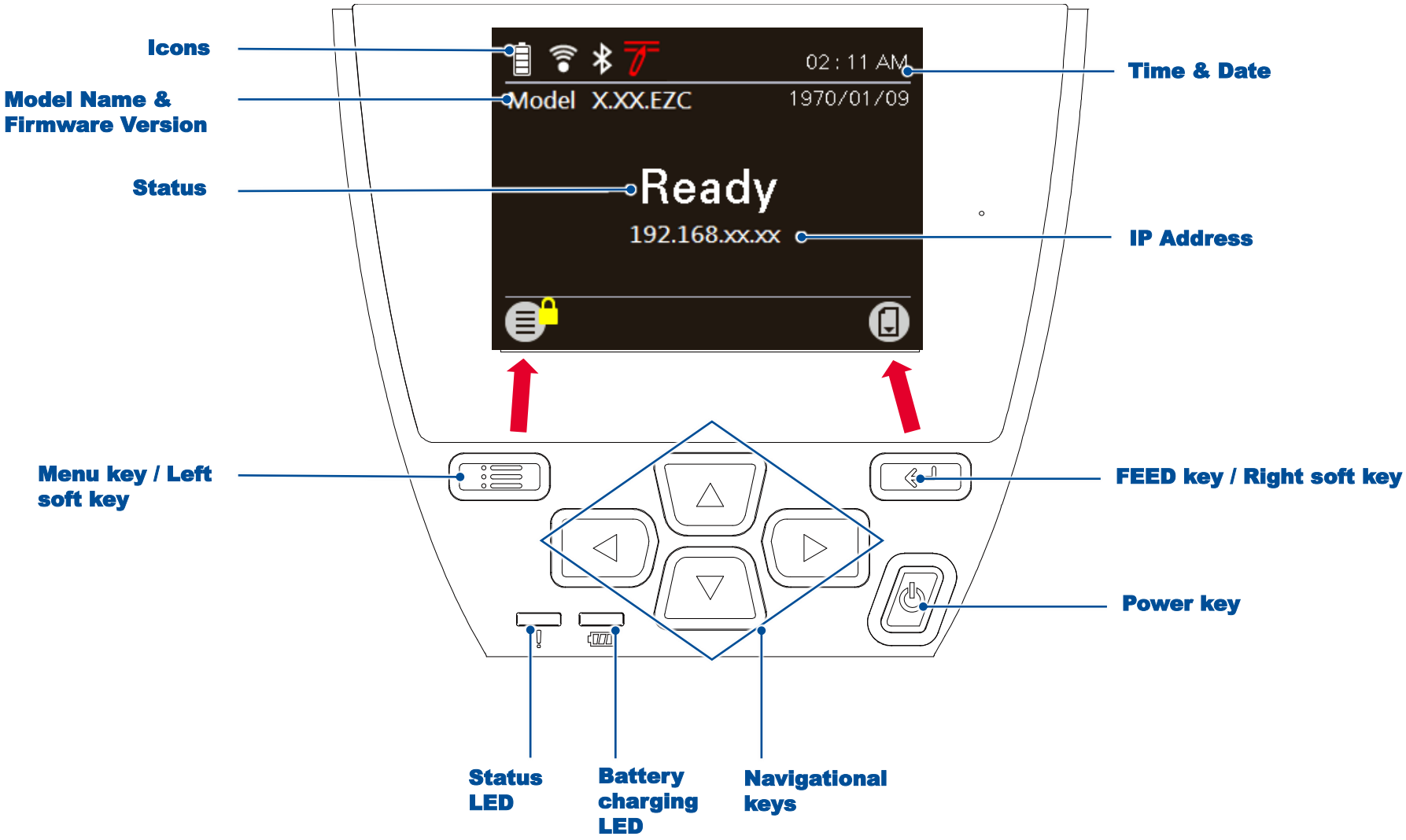

Keys / LCD control panel icon indication

Keys	Function	
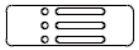	■ Menu key (Ready status) ■ Left soft key (Menu status)	Enter the LCD menu list. The label on the left footer of the UI will explain the function for left soft key. Check the label on the footer of the UI screen. The meaning of the select keys will vary.
	■ Feed key (Ready status) ■ Pause key (Printing status) ■ Right soft key (Menu status)	Feed one label. Pause the print job. The label on the right footer of the UI will explain the function for right soft key. Check the label on the footer of the UI screen. The meaning of the select keys will vary.
	■ Power-on key	Press and hold for 2-3 seconds to turn on the printer. Press and hold for 2-3 seconds to turn off the printer.
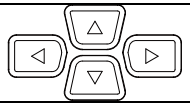	■ Navigational keys	Used to select items, menu selection, and navigation in the UI.

Icon	Indication
	1/4 charging level: 0 - 25% 2/4 charging level: 25 - 50% 3/4 charging level: 50 - 75% 4/4 charging level: 75 - 100%
	Wi-Fi device is ready
	Bluetooth device is ready
	Print head cleaning notice

Icon	Function
	Enter the menu list (the Menu is locked and a password is required.)
	Feed button (advance one label)
	Back button
	Enter cursor (be marked in green) located option
	Scroll down / up button

- **Status LED indication**

Color		Meaning
	Off	Printer is ready to use
	(Green)	**Flash:** System is downloading data or printer is paused.
	(Amber)	System is clearing data.
	(Red)	**Solid:** Printer head open, cutter error. **Flash:** Printing error, such as paper empty, paper jam, ribbon empty, or memory error etc.

- **Battery charging LED indication**

Color		Meaning
	Off	Printer is ready to use
	(Amber)	**Solid**: Printer head open, cutter error. Charging is in progress **Flash:** Battery temperature is too hot or too cold; Battery overvoltage; Charge timeout; Battery absent

3. Setup

Alpha-30L(HC) and Alpha-40L operate in the same way, this manual uses Alpha-30L(HC) as an example.

3.1 Setting up the Printer

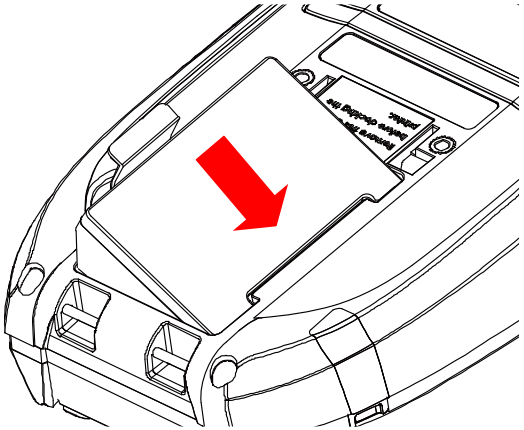

1. Open the printer's top cover Insert the right side to install the battery at the rear of the printer.

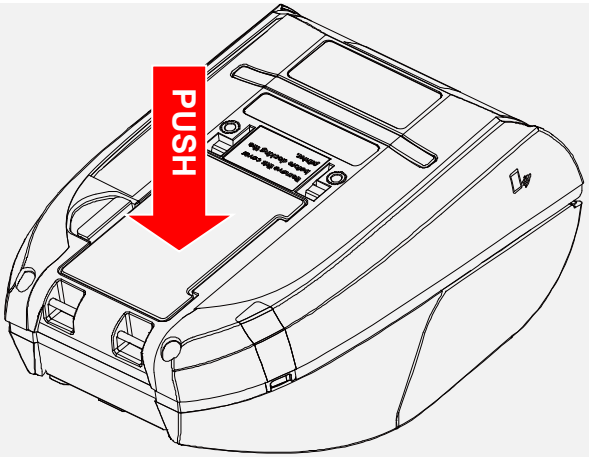

2. Push the left side of the battery.

Battery safety warning
DO NOT throw the battery in fire.
DO NOT short circuit the contacts.
DO NOT disassemble the battery.
DO NOT throw the battery in municipal waste.

The symbol of the crossed out wheeled bin indicates that the battery should not be placed in municipal waste.

3.2 Charging the Smart Battery

Smart Battery Charging Mode and Operation Instructions

In order to battery storage safety and increase battery storage time, the battery will be in shutdown mode for storage and shipping. The smart battery is charged for the first time, it needs to unlock this shutdown mode.

- **For charging via printer:**

  No steps are required.

- **For 1-bay or 4-bay battery charger charging:**

  The LED indicator on the charger will flash red when the battery is charged for the first time. Please remove the smart battery and reinstall it to unlock this shutdown mode.

- **Charging Temperature**

  The battery normal working condition is from 0°C to 40°C (32 °F to 104 °F). The device or battery charger always perform battery charging in a safe and optimummanner. At higher temperatures (e.g. approximately +40 °C (+104 °F) or charging when turning on the printers), the printer or battery charger may stop charging for a period of time to keep the battery at acceptable temperatures.

Charging the Battery

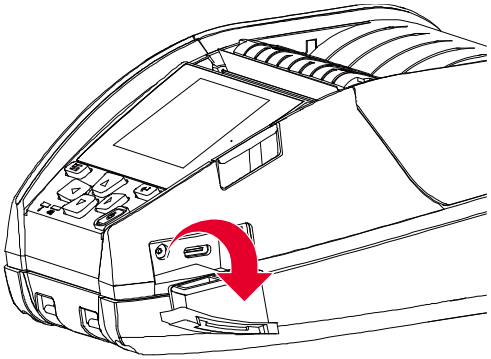

1. Open the interface cover.

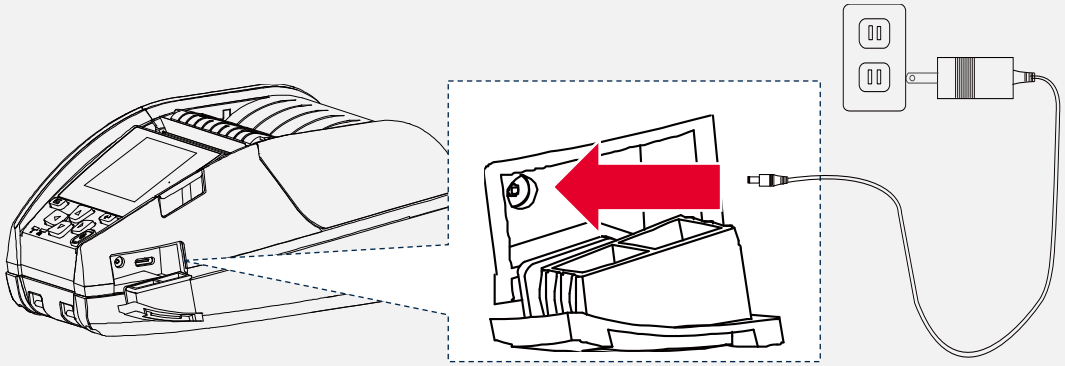

2. Plug the power cord to the power jack and power outlet.
3. When charging, the battery status LED indicator on the printer turns solid amber. After fully charged, the printer LED indicator turns off. It will stop charging automatically after the battery is fully charged.

Note:

Please switch OFF printer power prior to plug in the power cord to printer power jack.

When the battery is charging, please do not remove the battery from the printer, otherwise, please re-plug the power cord into a power outlet.

Charging the Battery by 1-bay/4-bay Battery Charger (Optional)

The battery for 3” printer:

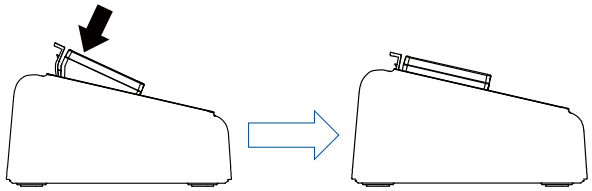

The battery for 4” printer

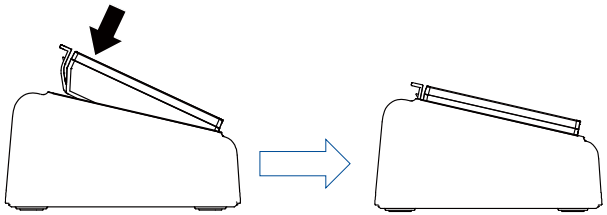

1. Plug the power adapter of the charger into a properly grounded outlet and plug the charger connector to a battery charger DC socket.
2. Push the battery down and locked by the latch as shown below.

1-bay battery charger

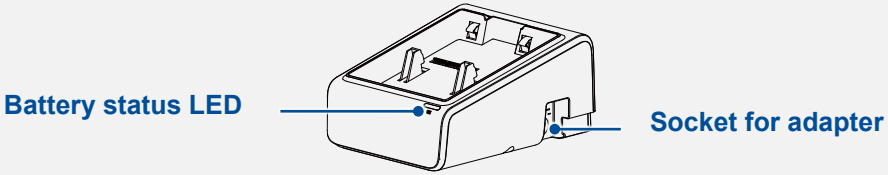

4-bay battery charger

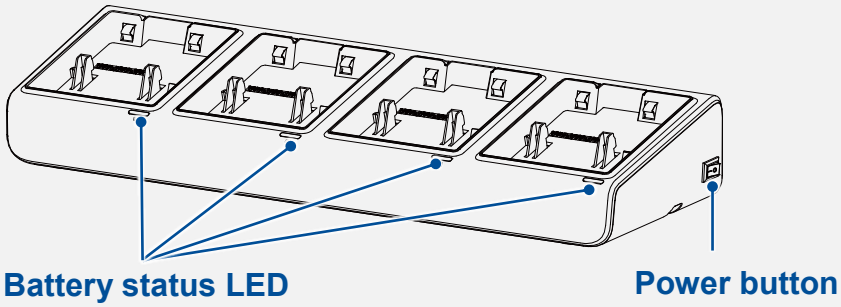

3. Plug the power cord to the power jack and plug the power cord into a properly power outlet.
4. When charging, the battery status LED indicator on the printer turns solid amber. After fully charged, the printer LED indicator turns off. It will stop charging automatically after the battery is fully charged.

Charging the Battery by 1-bay Printer Charger (Optional)

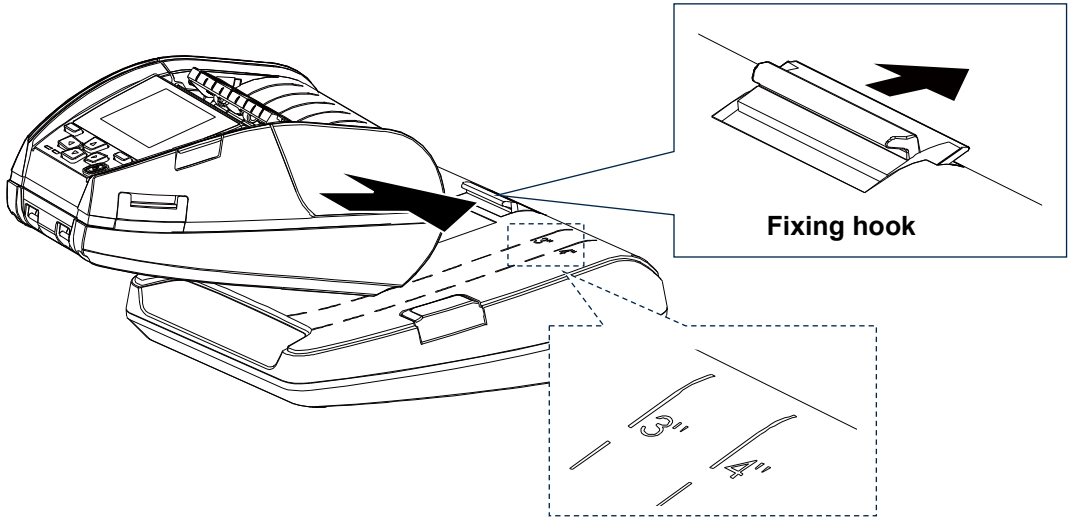

1. Plug the power adapter of the charger into a properly grounded outlet and plug the charger connector to a battery charger DC socket.
2. Push up the fixing hook with the correct angle and direction along the corresponding printer inch mark.

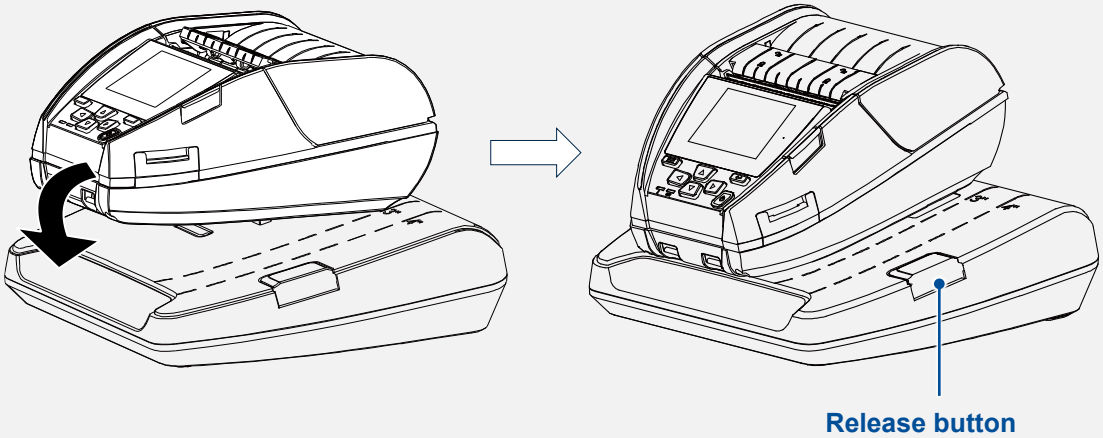

3. Push the printer down and fixed by the charger as shown below, it can start charging.
4. When charging, the battery status LED indicator on the printer turns solid amber. When fully charged, the printer LED indicator turns off. It will stop charging automatically after the battery is fully charged. Press the button to release the printer.

Charging the Battery by 4-bay Printer Charger (Optional)

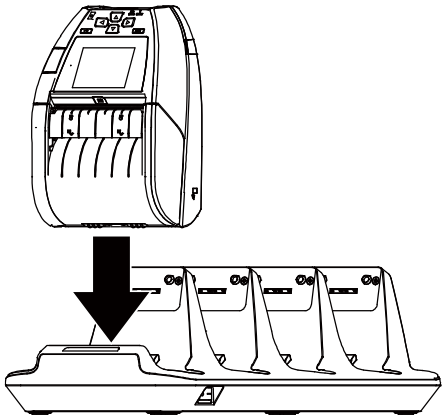

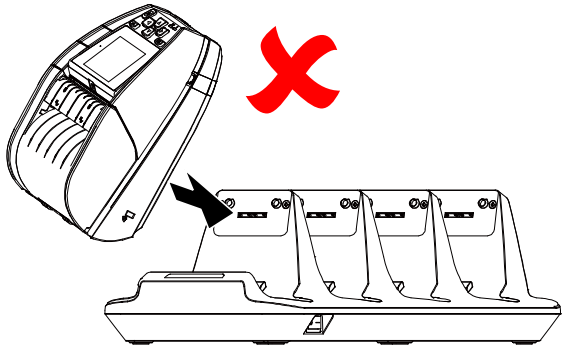

1. Plug the power adapter of the charger into a properly grounded outlet and plug the charger connector to a battery charger DC socket.
2. Install the printer onto the charger at the correct angle and direction as shown below.

   Note: To avoid damage, DO NOT install the printer at the angle shown on left.

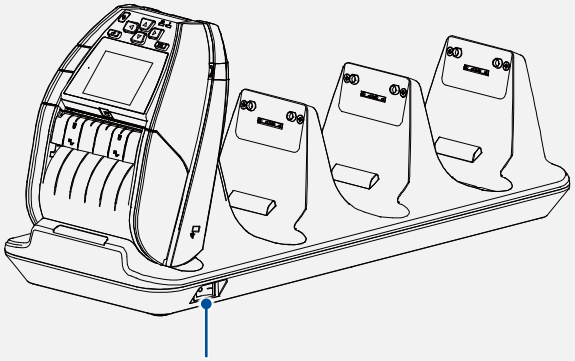

3. Turn on the power button of charger. It will start charging. (The LED on charger will turn on.)
4. When charging, the battery status LED indicator on the printer turns solid amber. When fully charged, the printer LED indicator turns off. It will stop charging automatically after the battery is fully charged.

3.3 Loading the Media

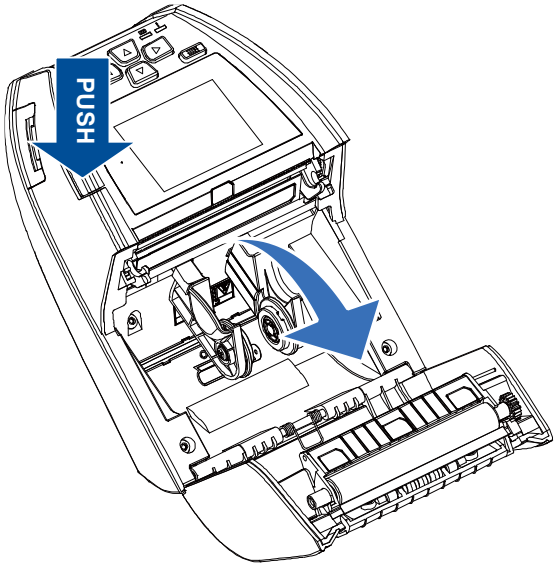

1. Open the printer media cover by pressing the media cover release button.

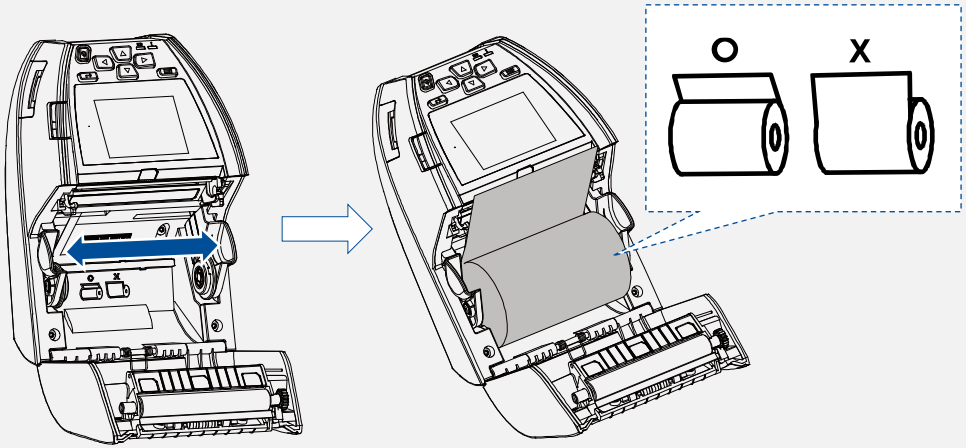

2. Pull the media holders apart to fit the label roll width.
3. Place the roll between the media holders and close them onto the core. Place the paper, printing side face up, and pull out enough paper over the print head.

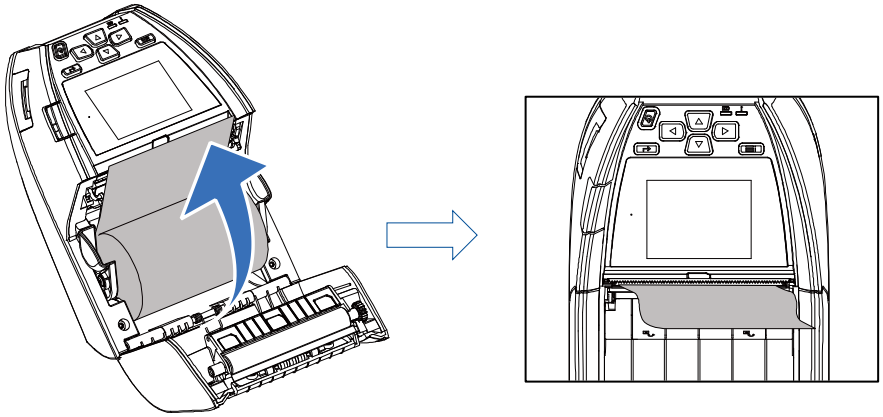

4. Press each side of media cover to close the media cover and make sure the media cover closed correctly.

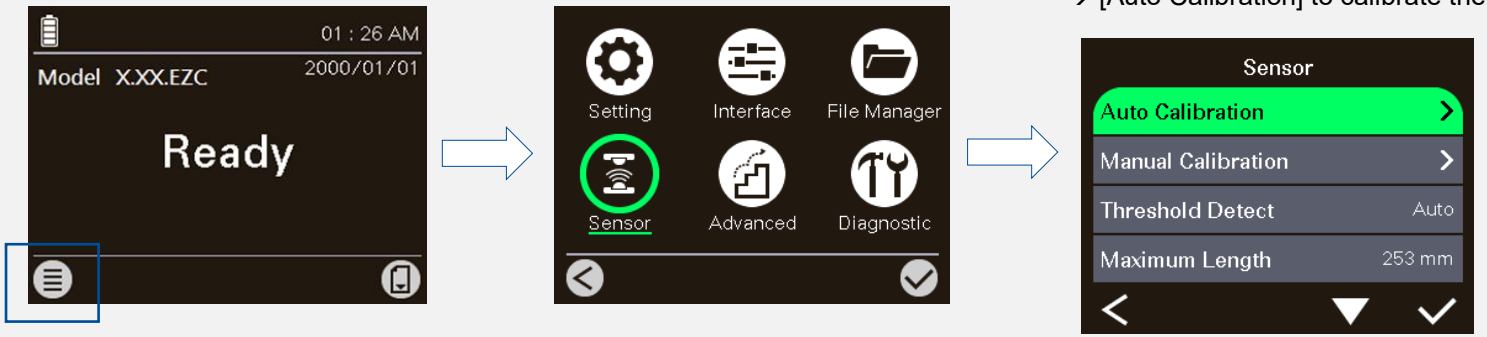

5. Press the Menu key to enter the LCD menu list. Go to [Sensor] → [Auto Calibration] to calibrate the media sensor.

Note: Please calibrate the gap/black mark sensor when changing media.

3.4 Loading the Media in Peel-off Mode

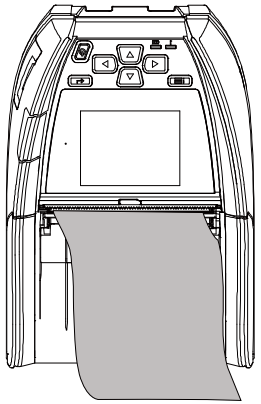

1. Please refer to section 3.3 to install the media and to calibrate the media sensor before loading media in peel-off mode.

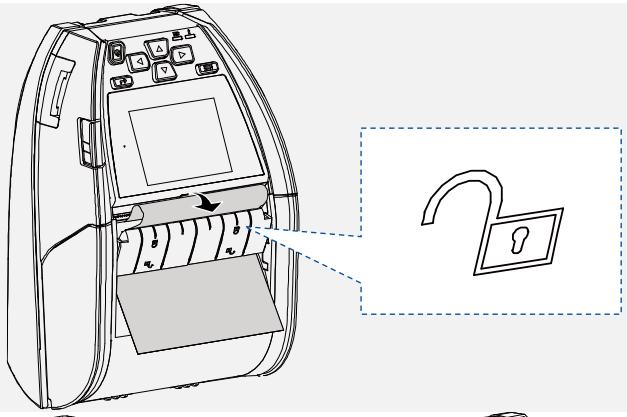

2. Feed the media go through the peeler module. (as figure shown)

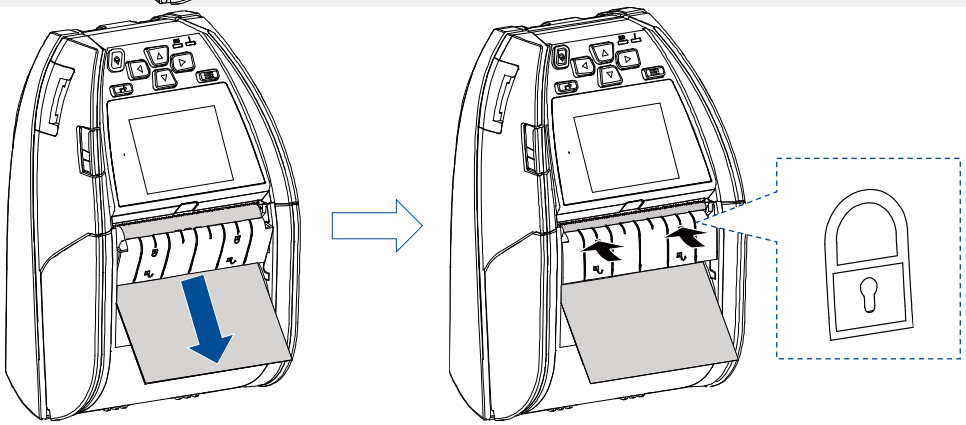

3. Pull the media tightly. Press down the peeler module to lock it.

4. Press the Menu key to enter the LCD menu list. Go to [Setting] → [Print Mode] to set the print mode to [Peeler Mode].

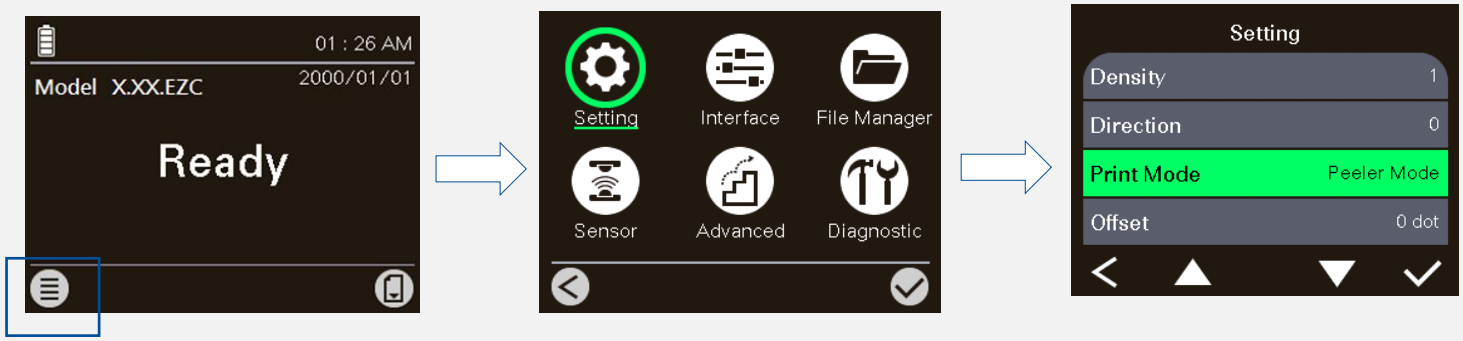

Note: Please calibrate the gap/black mark sensor when changing media.

3.5 Loading the External Media

1. Flip printer to the back side. Take off the rubber bar.

2. Release the lever. Install the label roll to stuck the media holder.

3. Load the paper from the external entrance chute.

4. Print a label for test.
5. Close the lever and make calibration.

3.6 Installing the Belt Clip

1. Lock the belt clip on lower of the printer.

2. Press the hook of belt clip into the bars on the lower printer as pictured. The printer can be hung on the belt.

3.7 Installing the IP54-rated environmental case with shoulder strap (Optional)

1. Zip up the case cover.

2. Place the printer in the case.

3. Close the case cover.

4. Zip up the outside cover to check. The outside cover should be opened and fixed while printing.

3.8 Connecting to the Printer

The printer must establish communication with a host terminal which sends the data to be printed.
There are 3 ways to connect for Alpha-30L series: Cable, Bluetooth, and Wireless LAN.

- **Cable Communication**

  1. Open the interface cover
  2. Connect the printer to the computer/smart phone (host terminal) with Type C cable. (Type C to USB)

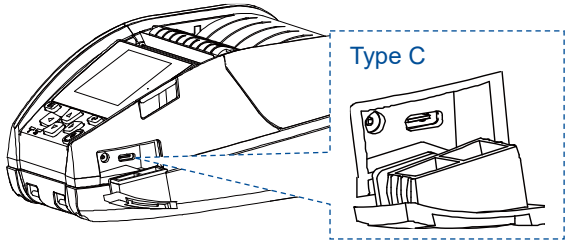

- **Wireless Communication with Bluetooth**

  1. Turn on the printer.
  2. Enable the Bluetooth for mobile device to search (local name) and to connect the printer's Bluetooth module.

     Note: Use the menu (or self-test printout) to check the Bluetooth local name. (Menu → Interface → Bluetooth → Local Name)
  3. Once the Bluetooth module is connected with the mobile device, the Bluetooth logo will be displayed on the LCD control panel.

- **Wireless Communication with Wi-Fi**

  Please refer to chapter TSC Console Utility for the detailed setting.

4. LCD Menu Function

The Alpha-30L(HC)/ Alpha-40L series offer the LCD panel to further enhance its capabilities to meet the demands of a wide range of printing solutions. This feature includes LCD control panel, 4 buttons and 2 LED display. Please press the “Menu” button to enter the setting menu.

4.1 How to Use the LCD to Set the Printer

Press the key to enter the menu list as following shown. You can use this 4 navigational keys and soft keys to scroll, select, enter or return the menu.

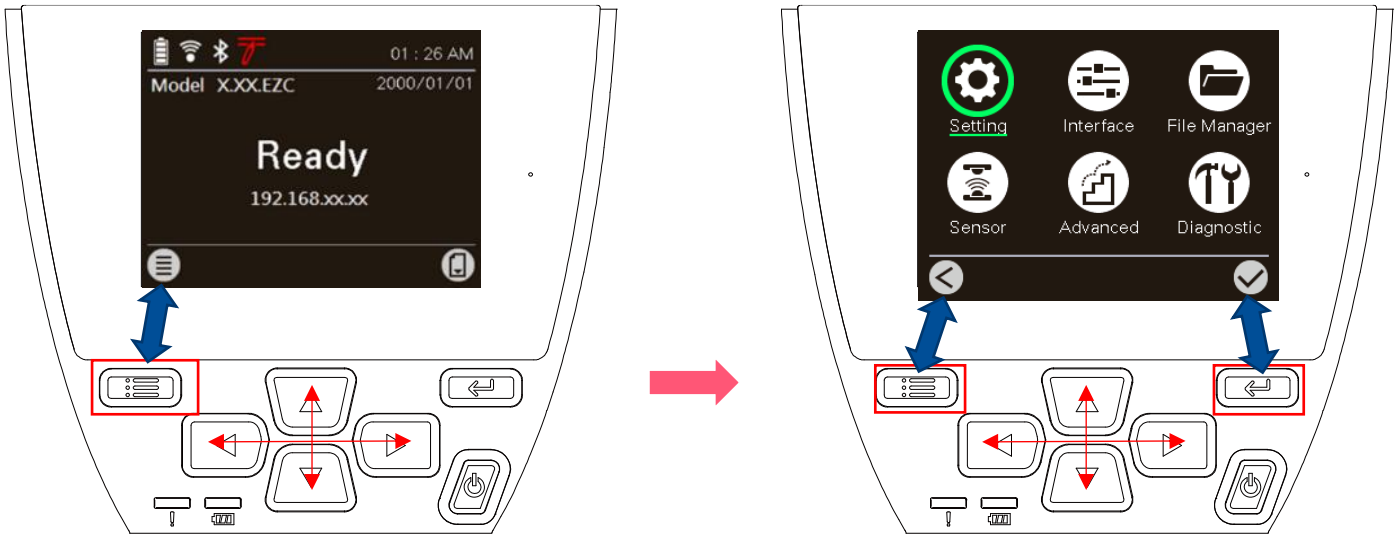

4.2 Main Menu Overview

There are 6 categories on the menu. Users can easily set the settings of the printer without connecting the computer. Please refer to following sections for more details.

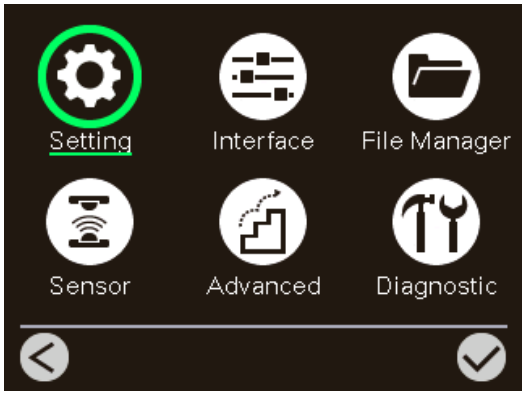

Setting : To set up the printer settings for TSPL & ZPL2.

Advanced : To set LCD, initialization, cutter type,…etc.

Sensor : To calibrate the selected media sensor.

File Manager : To check and manage printer's memory storage.

Interface : To set the printer interface settings.

Diagnostic : To check printer and help users to troubleshoot the problems.

4.3 TSPL

TSPL category can set up the printer settings for TSPL.

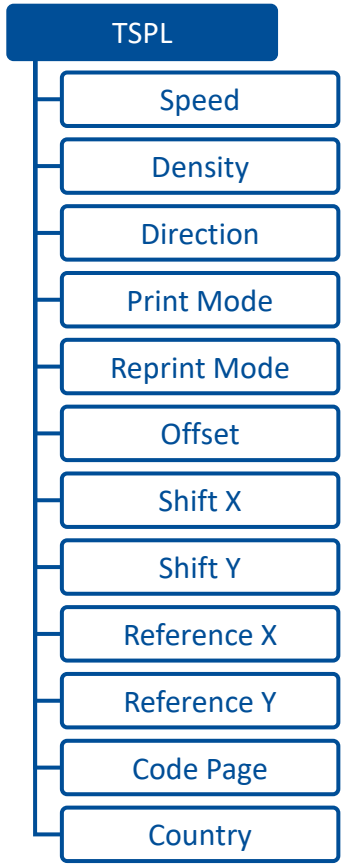

Item	Description	Default
Speed	Set the print speed.	**N/A**
Density	Set the printing darkness.	**8**
Direction	Set the printout direction. Setting Value: 0 and 1.(Feed direction ↓) Direction 0: 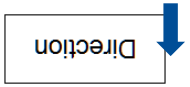 Direction 1: 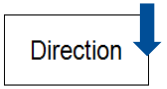	**0**
Print mode	Set the print mode. There are 5 modes in total: **None:** Next label top of form is aligned to the print head burn line location. (Tear Off Mode) **Batch Mode:** Once finishing the printing process, label will be fed to the tear plate location. **Peeler Mode:** Enable the label peel off mode.	**Batch Mode**
Offset	Adjust media stop location. Available value setting range: -999 dots to 999 dots.	**0 dot**
Shift X	Adjust print position. Available value setting range: -999 dots to 999 dots.	**0 dot**
Shift Y		**0 dot**
Reference X	Set the origin of printer coordinate system horizontally and vertically. Available setting range: 0 dot to 999 dots.	**0 dot**
Reference Y		**0 dot**
Code page	Set the code page of international character set.	**850**
Country	Set the country code. Available setting value range: 1 to 358.	**001**

Note: If printing from enclosed software/driver, the software/driver will send out the commands, which will overwrite the settings set from the panel.

4.4 ZPL2

This “ZPL2” category can set up the printer settings for ZPL2.

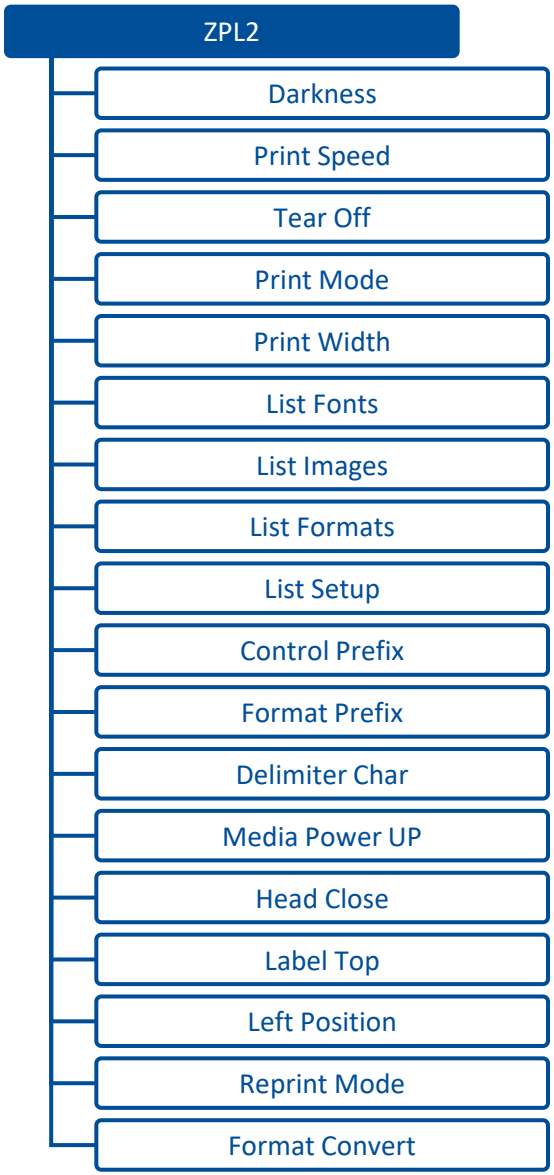

Item	Description	Default
Density	Set the printing darkness. Available setting range: 0 to 30.	**16**
Print Speed	Set the print speed.	**N/A**
Tear Off	Adjust media stop location. Available setting value range: -120 - 120 dots.	**0 dot**
Print mode	Set the print mode. There are 4 modes: **Tear Off:** Next label top of form is aligned to the print head heating line location. **Peeler Off**: Enable the label peel off mode.	**Tear Off**
Print Width	Set the print width. Available setting range: 2 - 999 dots.	**812**
List Fonts	Print the current fonts list from the memory devices to the label.	**N/A**
List Images	Print current printer available images list stored at the memory device to the label.	**N/A**
List Formats	Print current printer available formats list from the memory devices to the label.	**N/A**
List Setup	Print current printer configuration to the label.	**N/A**
Control Prefix	Set control prefix character.	**N/A**
Format Prefix	Set format prefix character.	**N/A**
Delimiter Char	Set delimiter character.	**N/A**
Media Power Up	Set the action of the media when turning on the printer. **Feed:** Printer will advance one label. **Calibration:** Printer will make calibration. **Length:** Printer determine length and feed label. **No Motion:** Printer will not move media.	**No Motion**
Head Close	Set the action of the media when closing the print head. **Feed:** Printer will advance one label. **Calibration:** Printer will make calibration. **Length:** Printer determine length and feed label. **No Motion:** Printer will not move media.	**No Motion**
Label Top	Adjust print position vertically on the label. Value range: -120 to +120 dots.	**0**
Left Position	Adjust print position horizontally on the label. Value range: -9999 to +9999 dots.	**0**
Reprint Mode	Reprint the last label by pressing button on printer's control panel.	**Disabled**
Format Convert	Select the bitmap scaling factor. The first number is the original dots per inch (dpi) value; the second the dpi which you would like to scale.	**None**

Note: printing from other software/drive will overwrite the settings set from the panel.

4.5 Sensor

This option is used to calibrate the selected sensor. We recommend calibrate the sensor before printing when changing the media.

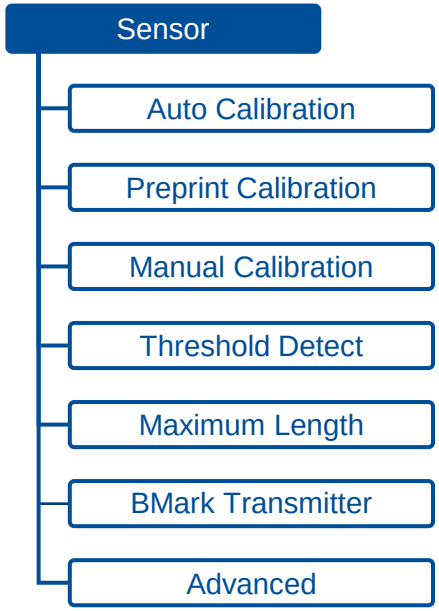

Item	Description	Default
Auto Calibration	Set the media sensor type and calibrate the selected sensor automatically.	**N/A**
Manual Calibration	In case Auto Calibration does not work, please use “Manual” function to set the paper length and gap/bline size to complete the calibration setting.	**N/A**
Preprint Calibration	Runs the calibration automatically when using the preprinted labels.	**N/A**
Threshold Detect	Set sensor sensitivity in fixed or auto.	**Auto**
Maximum Length	Set the maximum length for label calibration.	**152 mm**
BMark Transmitter	This option is used to set upper or lower black mark sensor as the main transmitter.	**Back side**
Advanced	Set the minimum paper length and maximum gap/bline length for auto-calibration.	**0 mm**

4.6 Interface

Interface can set the printer interface settings.

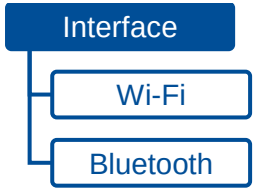

Note:

To comply with the new European RED (Radio Equipment Directive) requirements, the Network Block must be disabled before the printer's first network connection. To enable standard network functions, follow the steps below.

- **For USB setup (recommended in Europe):**
  1. Connect the printer via USB.
  2. Open **TSC Console** and go to **Functions > PRTSecure > Security Mode**.
  3. Set it to **"Standard"**.
- **For printers with LCD:**
  1. Go to **Menu > Advanced > PRTSecure**.
  2. Set Security Mode to **"Standard"**.

For detailed instructions, see the TSC Console Utility and Advanced sections.

Item		Description	Default
Wi-Fi	Status	Check the Wi-Fi status	N/A
	Configure	Set the Wi-Fi configure	DHCP
	SSID	Set the SSID	N/A
	Security	Set the security	Open
	Password	Set the security key	N/A
Bluetooth	Status	Check the Bluetooth status	N/A
	Local Name	Set the local name for Bluetooth	N/A

4.7 File Manager

File Manager is used to check the printer available memory, show the files list, delete the files or run the files that saved in the printer DRAM/Flash/Card memory.

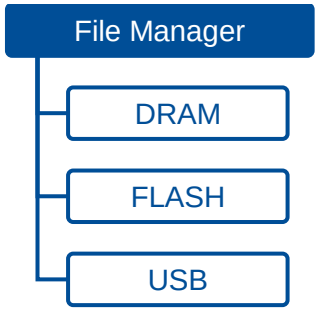

Item	Description
DRAM	Use this menu to show, delete and run (.BAS) the files saved in the printer DRAM memory.
FLASH	Use this menu to show, delete and run (.BAS) the files saved in the printer Flash memory.
CARD	Use this menu to show, delete and run (.BAS) the files saved in the SD card on printer. **Note: This subsection will only be visible when the SD card installed.**

4.8 Diagnostic

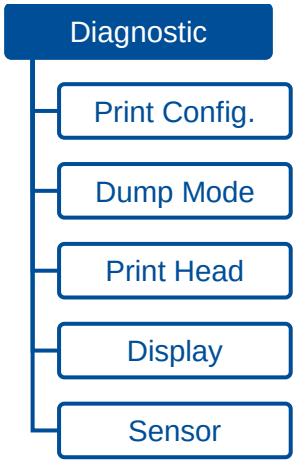

Item	Description
Print Config.	Print current printer configuration to the label. The configuration printout contains print head test pattern, which is useful for checking the dot damage on the print head heater.
Dump Mode	Captures the data from the communications port and prints out the data received by printer. In the dump mode, all characters will be printed in 2 columns. The left side characters are received from your system and the right side data are the corresponding hexadecimal value of the characters. It allows users or engineers to verify and debug the program. **Dump mode requires 4” wide paper width.**
Print Head	Check print head’s temperature and bad dots.
Display	Check LCD’s color state.
Sensor	Check sensors intensity and reading state.

4.9 Advanced

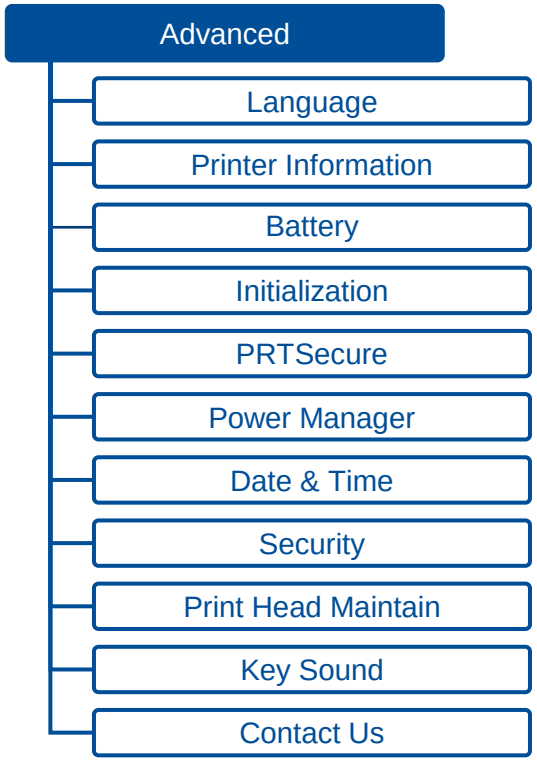

Item	Description	Default
Language	Setup the language on display.	**English**
Printer Information	Check the printer serial number, printed mileage (m), printed labels (pcs), etc.	**N/A**
Battery	Check the battery information and to set the warning for discharge times.	**550 times**
Initialization	Restore printer settings to defaults.	**N/A**
Date & Time	Setup the date and time on display.	**N/A**
Power Manager	Setup the brightness for display, standby mode, display turns off time and sleep mode.	**Brightness: 50** **Standby Mode: ON** **Display turns off after: 120 sec.** **Sleep Mode: OFF**

<table>
<tr><th>Item</th><th>Description</th><th>Default</th></tr>
<tr><td>PRTSecure</td><td>Set up the Printer Secure.
• Strict: Enable this security setting - Network setup via network is blocked
• Standard: Disable this security setting - Normal network setup allowed

If you want to use Strict Mode to connect to the network, please refer to the TSC Network Security Manual for more details. Click the document link or scan the QR code below to access the manual.</td><td>Europe Unit: Strict (Network Block enabled)</td></tr>
<tr><td>Security</td><td>Set the password for locking the menu. The default password is 8888.</td><td>Disable</td></tr>
<tr><td>Printer Head Maintn</td><td>Check print head status and to set the settings for print head care.
<table>
<tr><th>Item</th><th>Description</th></tr>
<tr><td>Warning</td><td>To enable/disable the print head clean warning. If enable this feature, once print head has been reached the setting mileage then the warning icon will be shown on printer UI for reminding user to clean the print head. The default setting is disable.</td></tr>
<tr><td>Reset Counter</td><td>To reset the print head clean warning mileage after cleaned print head.</td></tr>
<tr><td>Interval</td><td>To set the expected mileage for reminding user to clean the print head. Enable the “TPH warning lock” for this function. The default setting is 1 km.</td></tr>
</table></td><td>Disable</td></tr>
<tr><td>Key Sound</td><td>This feature is used to ON/OFF the printer key sound</td><td>ON</td></tr>
<tr><td>Contact us</td><td>This feature is used to check the contact information for tech support service</td><td>N/A</td></tr>
</table>

5. TSC Console Utility

TSC Console (PC Version) is an all-in-one management tool that integrates **Printer Management, Diagnostic Tool, CommTool**, and **Printer Settings**, designed specifically for a wide range of **TSC printers**.
It enables IT personnel to easily deploy, manage, monitor, and troubleshoot both wired and wireless connections for single or multiple printers. Users can adjust printer settings and status, download graphics, deploy fonts, images, and label templates, upgrade firmware, and send additional commands to multiple printers simultaneously.

With its intuitive Windows graphical interface, **TSC Console** simplifies printer setup and daily management, while its integrated management capabilities enhance system stability—ensuring printers remain operational, reliable, and easy to maintain.
Please visit TSC's official website to download this utility, and scan the QR code below to access the **TSC Console Manual** for detailed usage instructions.

6. Troubleshooting

Problem	Possible Cause	Recovery Procedure
No Power	* The battery is not properly installed. * Battery out of power. * Battery damage.	* Reinstall the battery. * Switch the printer on. * Charge the battery. * Replace a new battery.
Not Printing	* Check if interface cable is well connected to the interface connector. * Check if wireless or Bluetooth device is well connected between host and printer. * The port specified in the Windows driver is not correct.	* Re-connect cable to interface change a new cable. * Please reset the wireless device setting. * Select the correct printer port in the driver. * Check your program if there is a command PRINT at the end of the file and there must have CRLF at the end of each command line.
No print on the label	* Label loaded not correctly * Use wrong type paper	* Follow the instructions in loading the media. * Use thermal type paper
The printer status from LCD shows “Carriage Open”.	* The printer carriage is open.	* Please close the print carriage.
The printer status from LCD shows “No Paper”.	* Running out of media roll. * The media is installed incorrectly. * Media sensor is not calibrated.	* Supply a new media roll. * Follow the instructions in loading the media to reinstall the media roll. * Calibrate the media sensor.
The printer status from LCD shows “Paper Jam”.	* Media sensor is not set properly. * The media size is set incorrectly. * Label may be stuck inside the printer mechanism.	* Calibrate the media sensor. (Select the correct sensor) * Set media size correctly. * Remove the stuck label inside the printer mechanism.
Take Label	* Peel function is enabled.	* If use peel-off mode, please remove the label.
Can’t downloading the file to memory (FLASH / DRAM/ CARD)	* The space of memory is full.	* Delete unused files in the memory.

SD card is unable to use	* SD card is damaged. * SD card doesn't insert correctly.	* Use the supported capacity SD card. * Insert the SD card again.
Poor Print Quality	* Media is loaded incorrectly * Dust or adhesive accumulation on the print head. * Print density is not set properly. * Print speed is not set properly. * Print head element is damaged.	* Reload the supply. * Clean the print head. * Clean the platen roller. * Adjust the print density and print speed. * Run printer self-test and check the print head test pattern if there is dot missing in the pattern. * Change proper media roll. * Make sure the print carriage is closed properly.
Missing printing on the left or right side of label	* Wrong label size setup.	* Set the correct label size.
Irregular printing	* The printer is in Hex Dump mode.	* Turn off and on the printer to skip the dump mode.
Skip labels when printing	* Label size is not specified properly. * Sensor sensitivity is not set properly. * The media sensor is covered with dust.	* Check if label size is setup correctly. * Calibrate the sensor by Auto Gap or Manual Gap options. * Clear the sensor by blower.
RTC time is incorrect when reboot the printer	* The battery has run down.	* Check if there is a battery on the main board.

7. Maintenance

This session presents the clean tools and methods to maintain the printer.

For Cleaning

Depending on the media used, the printer may accumulate residues (media dust, adhesives, etc.) as a by-product of normal printing. To maintain the best printing quality, you should remove these residues by cleaning the printer periodically. Regularly clean the print head and supply sensors once change a new media to keep the printer at the optimized performance and extend printer life.

For Disinfecting

Sanitize your printer to protect yourself and others and can help prevent the spread of viruses.

Important

- Set the printer power switch to O (Off) prior to performing any cleaning or disinfecting tasks. Leave the power cord connected to keep the printer grounded and to reduce the risk of electrostatic damage.
- Do not wear rings or other metallic objects while cleaning any interior area of the printer.
- Use only the cleaning agents recommended in this document. Use of other agents may damage the printer and void its warranty.
- Do not spray or drip liquid cleaning solutions directly into the printer. Apply the solution on a clean lint-free cloth and then apply the dampened cloth to the printer.
- Do not use canned air in the interior of the printer as it can blow dust and debris onto sensors and other critical components.
- Only use a vacuum cleaner with a nozzle and hose that are conductive and grounded to drain off static build up.
- All reference in these procedures for use of isopropyl alcohol requires that a 99% or greater isopropyl alcohol content be used to reduce the risk of moisture corrosion to the printhead.
- Do not touch printhead by hand. If you touch it careless, please use 99% Isopropyl alcohol to clean it.
- Always taking personal precaution when using any cleaning agent.

Cleaning Tools

- Cotton swab
- Lint-free cloth
- Brush with soft non-metallic bristles
- Vacuum cleaner
- 75% Ethanol (for disinfecting)
- 99% Isopropyl alcohol (for printhead and platen roller cleaning)
- Genuine printhead cleaning pen
- Mild detergent (without chlorine)

Cleaning Process

Printer Part	Method	Interval
Print Head	I. Always turn off the printer before cleaning the printhead. II. Allow the printhead to cool for at least one minute. III. Use a cotton swab and 99% Isopropyl Alcohol or genuine print head cleaning pen to clean the print head surface.	Clean the print head when changing a new label roll.
Platen Roller	I. Turn off the printer. II. Rotate the platen roller and wipe it thoroughly with the lint-free 99% Isopropyl Alcohol.	Clean the platen roller when changing a new label roll
Peel Bar	Use the lint-free cloth with 99% Isopropyl Alcohol to wipe it.	As needed
Sensor	Use brush with soft non-metallic bristles or a vacuum cleaner, to remove paper dust. Clean upper and lower media sensors to ensure reliable Top of Form and Paper Out sensing.	Monthly
Exterior	Clean the exterior surfaces with a clean, lint-free cloth (water-dampened cloth). If necessary, use a mild detergent or desktop cleaning solution then use the 75% Ethanol to wipe it.	As needed
Interior	Clean the interior of the printer by removing any dirt and lint with a vacuum cleaner, as described above, or use a brush with soft non-metallic bristles then use the 75% Ethanol to wipe it.	As needed

8. Agency Compliance and Approvals

EN 55032, Class B
EN 55024
EN 55035
EN 62368-1

FCC part 15B, Class B
ICES-003, Class B

This equipment has been tested and found to comply with the limits for a Class B digital device, pursuant to part 15 of the FCC Rules. These limits are designed to provide reasonable protection against harmful interference in a residential installation. This equipment generates, uses and can radiate radio frequency energy and, if not installed and used in accordance with the instructions, may cause harmful interference to radio communications. However, there is no guarantee that interference will not occur in a particular installation. If this equipment does cause harmful interference to radio or television reception, which can be determined by turning the equipment off and on, the user is encouraged to try to correct the interference by one or more of the following measures:

-Reorient or relocate the receiving antenna.
-Increase the separation between the equipment and receiver.
-Connect the equipment into an outlet on a circuit different from that to which the receiver is connected.
-Consult the dealer or an experienced radio/ TV technician for help.

This device complies with Part 15 of the FCC Rules. Operation is subject to the following two conditions: (1) This device may cause harmful interference, and (2) this device must accept any interference received, including interference that may cause undesired operation.

This Class B digital apparatus complies with Canadian ICES-003
Cet appareil numérique de la classe B est conforme à la norme NMB-**003 du Canada**

AS/NZS CISPR 32, Class B

GB 4943.1
GB/T9254
GB 17625.1

IS 13252(Part 1)/
IEC 60950-1

TP TC 004
TP TC 020

Important safety instructions:

1. Read all of these instructions and keep them for later use.
2. Follow all warnings and instructions on the product.
3. Disconnect the power plug from the AC outlet before cleaning or if fault happened.
   Do not use liquid or aerosol cleaners. Using a damp cloth is suitable for cleaning.
4. The mains socket shall be installed near the equipment and easily accessible.
5. The unit must be protected against moisture.
6. Ensure the stability when installing the device, Tipping or dropping could cause damage.
7. Make sure to follow the correct power rating and power type indicated on marking label provided by manufacture.
8. Please refer to user manual for maximum operation ambient temperature.

WARNING:
Hazardous moving parts, keep fingers and other body parts away.

CAUTION:
Risk of explosion if battery is replaced by an incorrect type.
Dispose of used batteries according to the Instructions as below.

1. DO NOT throw the battery in fire.
2. DO NOT short circuit the contacts.
3. DO NOT disassemble the battery.
4. DO NOT throw the battery in municipal waste.
5. The symbol of the crossed out wheeled bin indicates that the battery should not be placed in municipal waste.

电池安全警告：

- 勿将电池扔于火中。
- 勿将电池接点短路。
- 不可拆解电池。
- 不乱将电池当成一般废弃物处理。
- 打叉的垃圾桶符号表示电池不应该被放置到一般废弃堆中。

注意:

- 更换不正确型号类型的电池，将产生爆炸危险。
- 请根据使用说明处理用过的电池。

鋰電安全使用指南:

注意：電池若未正確更換，可能會爆炸。請用原廠建議之同款或同等級的電池來更換。請依原廠指示處理廢棄電池。

CAUTION:
The printhead may be hot and could cause severe burns. Allow the printhead to cool.

CAUTION:
Any changes or modifications not expressly approved by the grantee of this device could void the user's authority to operate the equipment.

CE Statement:
This equipment complies with EU radiation exposure limits set forth for an uncontrolled environment. This equipment should be installed and operated with minimum distance 20 cm between the radiator & your body.

All operational modes:
2.4GHz: 802.11b, 802.11g, 802.11n (HT20), 802.11n (HT40)
5GHz: 802.11a,

The frequency, mode and the maximum transmitted power in EU are listed below:
2400 MHz – 2483.5 MHz: 19.88 dBm (EIRP)
5150 MHz – 5250 MHz: 17.51 dBm (EIRP)

5150-5350MHz for Only indoor use
5470-5725MHz for indoor/outdoor use

Restrictions In AZE
National restrictions information is provided below

Frequency Band	Country	Remark
5150-5350MHz	**Azerbaijan**	**No license needed if used indoor and power not exceeding 30mW**
5470-5725MHz		

Hereby, TSC Auto ID Technology Co., Ltd. declares that the radio equipment type [Wi-Fi] IEEE 802.11 a/b/g/n is in compliance with Directive 2014/53/EU
The full text of the EU declaration of conformity is available at the following internet address: http:// www.tscprinters.com

RF exposure warning (Wi-Fi)
This equipment must be installed and operated in accordance with provided instructions and must not be co-located or operating in conjunction with any other

antenna or transmitter. End-users and installers must be providing with antenna installation instructions and transmitter operating conditions for satisfying RF exposure compliance.
SAR Value: 0.736 W/kg

RF exposure warning (For Bluetooth)
The equipment complies with FCC RF exposure limits set forth for an uncontrolled environment.
The equipment must not be co-located or operating in conjunction with any other antenna or transmitter.

Canada, Industry Canada (IC) Notices
This Class B digital apparatus complies with Canadian ICES-003 and RSS-210.
Operation is subject to the following two conditions: (1) this device may not cause interference, and (2) this device must accept any interference, including interference that may cause undesired operation of the device.

Radio Frequency (RF) Exposure Information
The radiated output power of the Wireless Device is below the Industry Canada (IC) radio frequency exposure limits. The Wireless Device should be used in such a manner such that the potential for human contact during normal operation is minimized.

This device has been evaluated for and shown compliant with the IC Specific Absorption Rate ("SAR") limits when installed in specific host products operated in portable exposure conditions. **(For Wi-Fi)**

This device has also been evaluated and shown compliant with the IC RF Exposure limits under portable exposure conditions. (Antennas are less than 20 cm of a person's body). **(For Bluetooth)**

Canada, avis de l'Industry Canada (IC)
Cet appareil numérique de classe B est conforme aux normes canadiennes ICES-003 et RSS-210.
Son fonctionnement est soumis aux deux conditions suivantes : (1) cet appareil ne doit pas causer d'interférence et (2) cet appareil doit accepter toute interférence, notamment les interférences qui peuvent affecter son fonctionnement.

Informations concernant l'exposition aux fréquences radio (RF)
La puissance de sortie émise par l'appareil sans fil est inférieure à la limite d'exposition aux fréquences radio de l'Industry Canada (IC). Utilisez l'appareil sans fil de façon à minimiser les contacts humains lors du fonctionnement normal.

Ce périphérique a été évalué et démontré conforme aux limites SAR (Specific Absorption Rate – Taux d'absorption spécifique) par l'IC lorsqu'il est connecté à des dispositifs hôtes spécifiques opérant dans des conditions d'utilisation mobile. **(Pour le Wi-Fi)**
Ce périphérique a également été évalué et démontré conforme aux limites d'exposition radio-fréquence par l'IC pour des utilisations par des opérateurs mobiles (les antennes sont à moins de 20 cm du corps d'une personne). **(Pour le Bluetooth)**

NCC 警語:

經型式認證合格之低功率射頻電機，非經許可，公司、商號或使用者均不得擅自變更頻率、加大功率或變更原設計之特性及功能。(即低功率電波輻射性電機管理辦法第十二條)

低功率射頻電機之使用不得影響飛航安全及干擾合法通信；經發現有干擾現象時，應立即停用，並改善至無干擾時方得繼續使用。

前項合法通信，指依電信法規定作業之無線電通信。低功率射頻電機須忍受合法通信或工業、科學及醫療用電波輻射性電機設備之干擾。(即低功率電波輻射性電機管理辦法第十四條)

Revision History

Date	Content	Editor
2022/7/4	Modified Sensor Maximum Length default from 254mm to 152mm, BMark Transmitter default value from print side to backside	Linda
2023/3/28	Modified ch.9 (add Thailand NBTC)	Camille
2023/12/15	Added Alpha-30L Healthcare	Camille
2024/1/30	Added new user options	Camille
2025/7/30	Updated Trademark and Copyright Notice info. Updated Specifications section (Add rMQR code)	Camille
2025/11/10	Update the TSC Console Utility section Add a note to Interface section (RED) Update the Advance section for adding PRTSecure item.	Camille

www.tscprinters.com