MINDEO

MP8608 Image Platform

User Manual

Version: MP8608_UM_EN_V1.1.1

NOTICE

⚠	Ensure that the optional DC adapter works at +5V, especially for the RS-232 interface cable.

1. All software, including firmware, furnished to the user is on a licensed basis.
2. The right is reserved to make changes to any software or product to improve reliability, function, or design.
3. The material in this manual is subject to change without notice.
4. A standard packing includes an image platform, a USB cable, a quick guide.
5. Optional accessories include a stand, a RS-232 cable.

Contents

1 Specifications 1

1-1 Technical specifications 1

1-2 Default setting for each barcode 2

2 Getting started 3

2-1 Cable connector pin-outs descriptions 3

2-2 Dimensions 4

2-3 Field of view 7

2-4 Introduction to installation 8

2-4-1 Installation - RS-232 8

2-5-2 Installation - USB 8

3 Parameter menus 9

3-1 Single-parameter setting by scanning 1D barcodes 9

3-2 Single or Multiple-parameter setting by scanning a QR code barcode 10

3-3 Interface selection 11

3-4 RS-232 interface 12

3-5 USB interface 14

3-6 Scan mode & some global settings 17

3-7 LED and Beeper Indication 22

3-8 LED illumination level 24

3-9 Single type of barcode, Multi-symbols read 26

3-10 DPM, Structured append, and Mobile screen read 27

3-11 UPC-A 29

3-12 UPC-E 31

3-13 UPC-E1 33

3-14 EAN-13 (ISBN/ISSN) 35

3-15 EAN-8 37

3-16 Code 39 (Code 32, Trioptic Code 39) 39

3-17 Interleaved 2 of 5 42

3-18 Industrial 2 of 5 (Discrete 2 of 5) 44

3-19 Matrix 2 of 5 45

3-20 Codabar 46

3-21 Code 128 48

3-22 UCC/EAN 128 (GS1-128) 50

3-23 ISBT 128 52

3-24 Code 93 53

3-25 Code 11 54

3-26 MSI/Plessey 56

3-27 UK/Plessey 58

3-28 China Post 59
3-29 China Finance 60
3-30 GS1 DataBar (GS1 DataBar Truncated) 62
3-31 GS1 DataBar Limited 63
3-32 GS1 DataBar Expanded 64
3-33 GS1 Composite 65
3-34 PDF417 67
3-35 MicroPDF417 68
3-36 QR Code 69
3-37 Data Matrix 70
3-38 Han Xin Code 71
3-39 Aztec Code 72
3-40 G1-G6 & C1-C3 & FN1 substitution string setting 73
3-41 G1-G4 string position & Code ID position 78
3-42 String transmission 79
4 Maintenance 82
5 Assembling the stand ..... 错误!未定义书签。
6 Barcode representing non-printable character 83
7 ASCII Table 84
8 Test barcode 85
9 Return default parameters & firmware version 89
10 Configuration alphanumeric entry barcode 90

1 Specifications

1-1 Technical specifications

Table 1-1 Image platform technical specifications

Dimensions (H ×W ×D)	147 mm ×74.5 mm ×139 mm (without stand)
Weight	361 g (without cable)
Cable	Straight 2.0 m
Connector Type	RJ-45 phone jack connector
Case Material	PC
Indicator	Beeper, LED
Interface	RS-232, USB Keyboard, USB virtual COM
Programming Method	Manual (reading special barcode)
Program Upgrade	Online
Input Voltage	DC 5 ±0.25 V
Current	Working: 410 mA, (Max: 700 mA)
Image Size	1280 ×1024 pixels
LED	2700 K
Scanning Angle	±60°, ±54°, 360°(Skew, Pitch, Roll)
Decode Capability	1D: UPC-A, UPC-E, UPC-E1, EAN-13, EAN-8, ISBN (Bookland EAN), ISSN, Code 39, Code 39 full ASCII, Code 32, Trioptic Code 39, Interleaved 2 of 5, Industrial 2 of 5 (Discrete 2 of 5), Matrix 2 of 5, Codabar (NW7), Code 128, UCC/EAN 128 (GS1-128), ISBT 128, Code 93, Code 11 (USD-8), MSI/Plessey, UK/Plessey, China Post, China Finance, GS1 DataBar (formerly RSS) variants
	2D: PDF417, MicroPDF417, QR Code, MicroQR Code, DataMatrix, Han Xin Code, Aztec Code, GS1 Composite
Minimum Resolution	4 mil, 1 mil = 0.0254 mm
Decoding Depth	4 mil Code39 (9 chars): 35 mm - 70 mm
	5 mil Code39 (3 chars): 25 mm - 80 mm
	10 mil Code39 (3 chars): 0 mm - 120 mm
	13 mil UPC (6 chars): 0 mm - 140 mm
	15 mil Code39 (1 char): 0 mm - 145 mm
	20 mil Code39 (1 char): 0 mm - 210 mm
	6.7 mil PDF417 (20 chars): 20 mm - 95 mm
	10 mil QR (20 chars): 10 mm - 100 mm
	10 mil DM (20 chars): 10 mm - 100 mm
	20 mil QR (20 chars): 0 mm - 150 mm
Temperature	0°to 50℃, Operating; -40°to 70℃, Storage
Humidity	5% to 95% (non-condensing)
Safety	Photobiological Safety: EN62471:2008 Illumination: 0~100,000 LUX

1-2 Default setting for each barcode

Table 1-2 Default setting for each barcode

Code type	Read enable	Check digit verification	Check digit transmission	Min. code length	Proprietary code ID	AIM code ID
UPC-A	√	√	√	(12)[2]	A	]Em
UPC-E	√	√	√	(8)[2]	D	]Em
UPC-E1	√	√	√	(8)[2]	D	] Em
EAN-13	√	√	√	(13)[2]	A	]Em
EAN-8	√	√	√	(8)[2]	C	] Em
ISBN (Bookland EAN)/ISSN[1]	√	√	√	(13)[2]	B	]Em
Code 39	√	-	-	1	M	]Am
Interleaved 2 of 5	√	-	-	6	I	]Im
Industrial 2 of 5	-	-	-	4	H	]Im
Matrix 2 of 5	√	-	-	6	X	]Im
Codabar	√	-	-	4	N	]Fm
Code 128	√	√	-	1	K	]Cm
UCC/EAN 128 (GS1-128)	√	√	-	1	K	]Cm
ISBT 128	√	√	-	1	K	]Cm
Code 93	√	√	-	1	L	]Gm
Code 11	-	√	-	4	V	]Hm
MSI/Plessey	-	-	-	4	O	]Mm
UK/Plessey	-	√	-	1	U	]Mm
China Post	√	-	-	(11)[2]	T	]Im
China Finance	√	-	-	(10)[2]	Y	-
GS1 DataBar	√	-	-	(16)[2]	R	]em
GS1 DataBar Truncated[3]	√	-	-	(16)[2]	R	]em
GS1 DataBar Limited	√	-	-	(16)[2]	R	]em
GS1 DataBar Expanded	√	-	-	1	R	]em
GS1 Composite	-	-	-	-	y	]em
PDF417	√	-	-	-	p	]Lm
MicroPDF417	-	-	-	-	p	]Lm
DataMatrix	√	-	-	-	d	]dm
QR code	√	-	-	-	q	]Qm
MicroQR code	√	-	-	-	q	]Qm
Han Xin Code	-	-	-	-	h	]Xm
Aztec Code	-	-	-	-	a	]zm

Note: [1] The settings for ISBN/ISSN and EAN-13 must be the same except the code ID.

[2] Fixed-length barcodes.

[3] The settings for GS1 DataBar Truncated and GS1 DataBar must be the same.

2 Getting started

2-1 Cable connector pin-outs descriptions

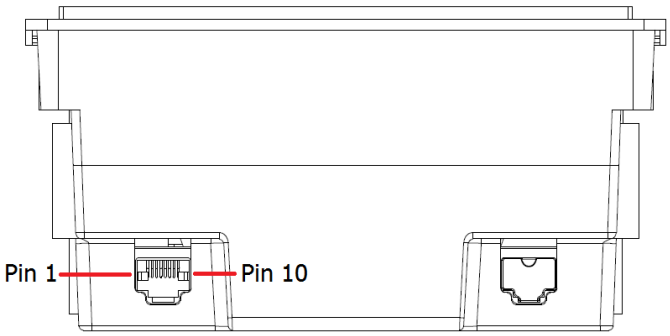

Figure 2-1 Cable connector interface pin-outs

Pin	RS232	USB
1	Power (+5V)	Power (+5V)
2	+3.3V (for interface auto selection purpose)	+3.3V (for interface auto selection purpose)
3	Ground	Ground
4	+3.3V (for interface auto selection purpose)	Ground (for interface auto selection purpose)
5	TxD	Reserved
6	RxD	Reserved
7	Reserved	Reserved
8	Reserved	Reserved
9	CTS	D-
10	RTS	D+

Note: Voltage level of all RS232 Pin-outs (RxD, TxD, CTS and RTS) is 0V for logic low and 3.3V for logic high.

2-2 Dimensions

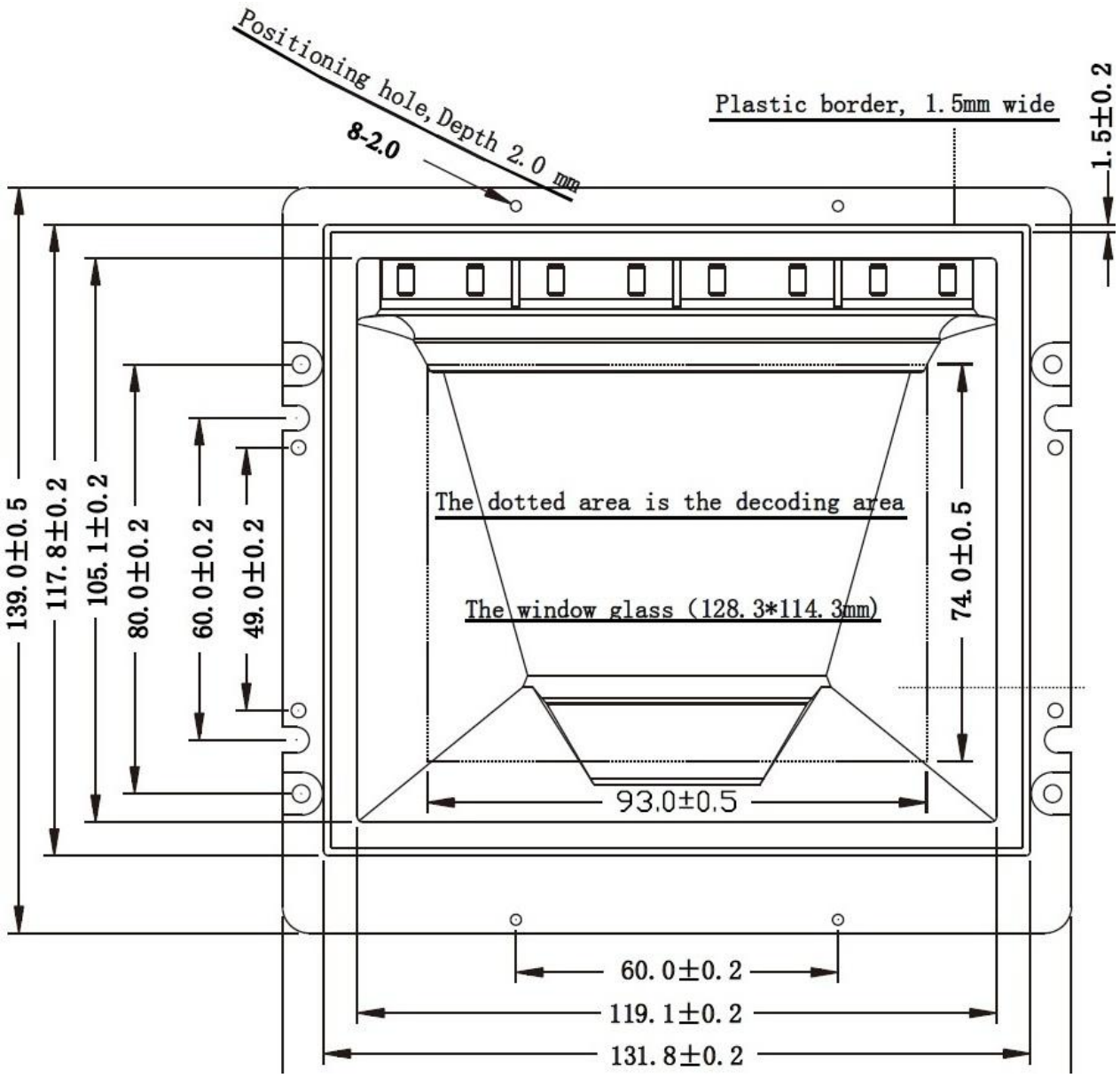

Figure 2-2 Dimensions (without stand)

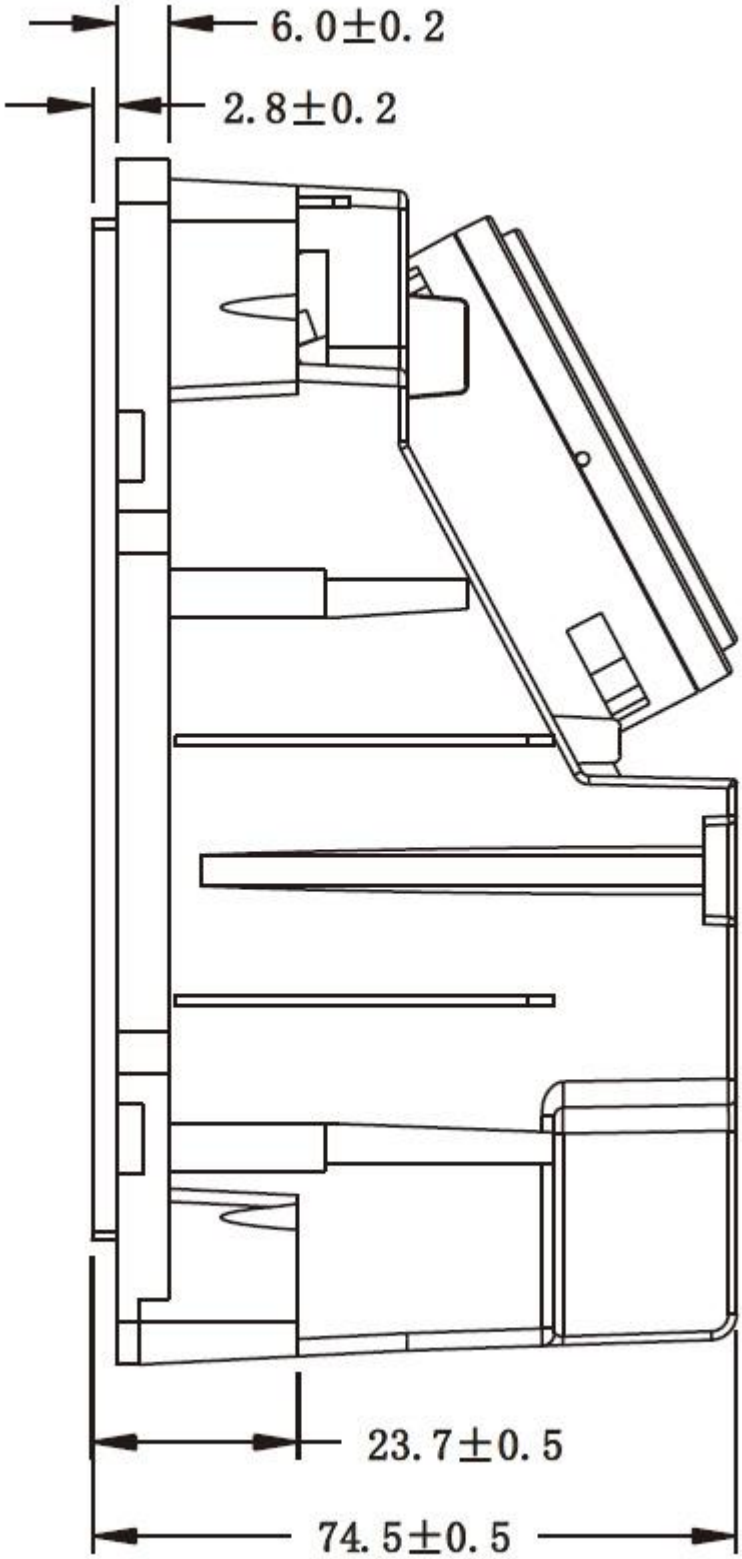

Figure 2-3 Dimensions (with stand)

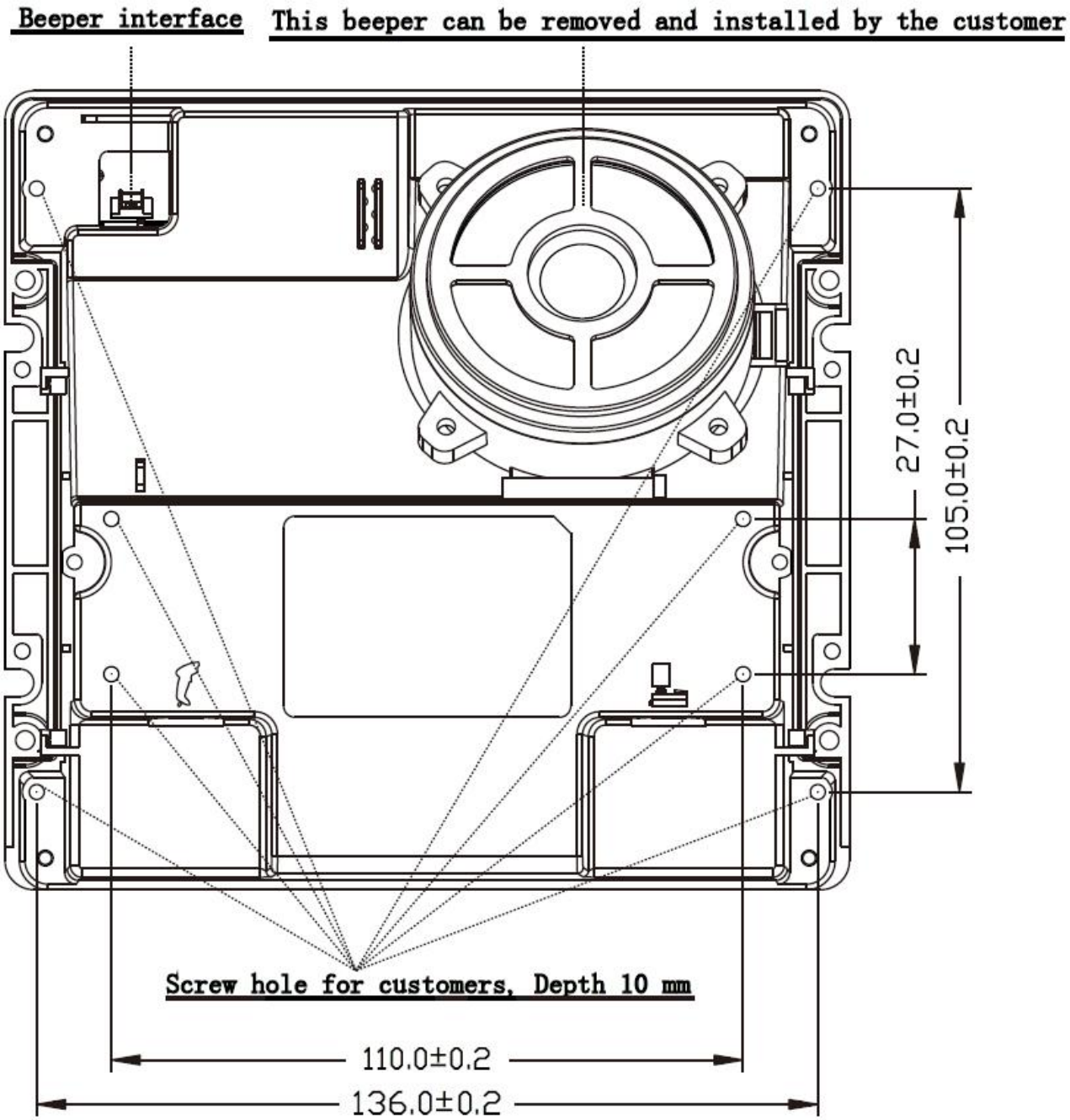

Figure 2-4 Dimensions of hanging holes

2-3 Field of view

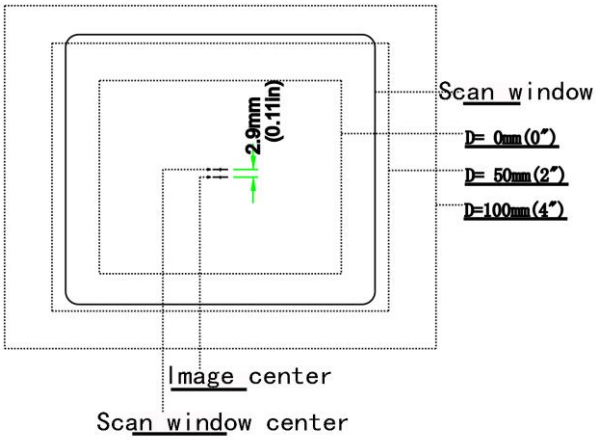

Figure 2-5 Field of view – Front view

2-4 Introduction to installation

Note: If any of the below operation is incorrect, turn off the power immediately and check the image platform for any improper connections. Go through all steps again.

2-4-1 Installation - RS-232

1. Switch off the host.
2. Attach the phone jack connector of the RS-232 cable to Host interface on the image platform.
3. Connect another end of the RS-232 cable to the serial port (PIN 9) on the device.
4. If the host does not have power supply (on PIN 9), connect the external power supply (5 V DC adapter) to the RS-232 cable.
5. Switch on the host. If connect properly, the beeper and the LED of the image platform will indicate.

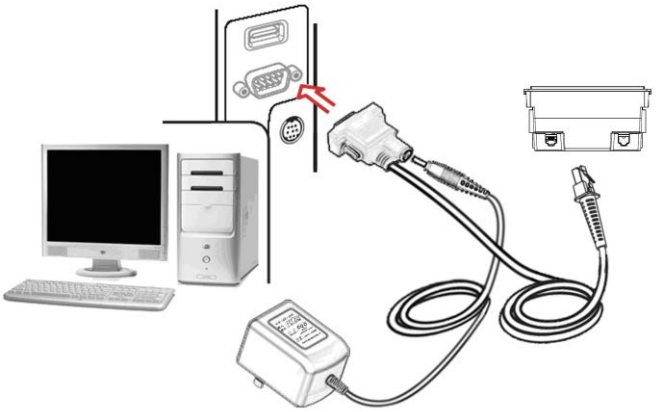

Figure 2-6 Installation of RS232 cable

2-5-2 Installation - USB

The image platform attaches directly to a USB host.

1. Attach the phone jack connector of the USB cable to the Host interface on the image platform.
2. Connect another end of the USB cable to an available USB port of the Host.
3. If connect properly, the beeper and the LED of the image platform will indicate.
4. Windows OS will automatically detect the USB device.

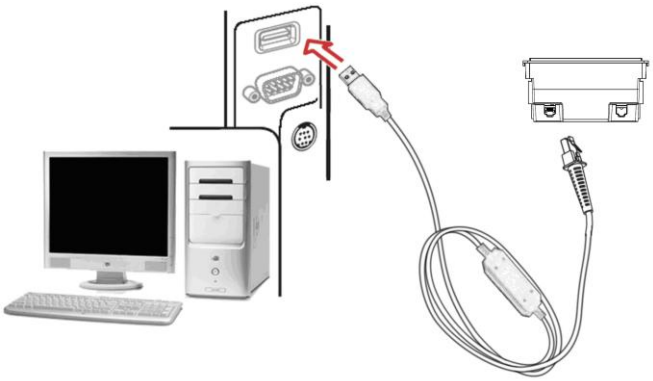

Figure 2-7 Installation of USB cable

3 Parameter menus

3-1 Single-parameter setting by scanning 1D barcodes

Important notes:

1. During the process of programming, LED is lighting to indicate the programming correctness. LED will go off if any incorrect programming operation performed.
2. After each successful programming, LED will go off and the image platform will beep twice.
3. Throughout the programming barcode menus, **the factory default settings are indicated with asterisks (*).**

Two programming modes have been provided as bellows:

❶ Single-scan setting

- Scan the appropriate **Single-scan setting** according to the user's demand.

Example: To set Flow control to be XON/XOFF.

Steps: Scan the following barcode.

%0301D03%

❷ Multiple-scan setting

- Step 1. Scan the **Option barcode** barcode according to the user's demand.
- Step 2. To the right of the option barcode, the necessary alphanumeric inputs are listed. Scan two alphanumeric entries from 0 to 9 or A to F, refer to 10 Configuration alphanumeric entry barcode.
- Step 3. Repeat Step 2, if more user parameters input are required.
- Step 4. Scan the **%END%** barcode, listed on the lower left hand corner of each parameter setting part.

Example: To set Flow control to be XON/XOFF.

Steps: Referring to 3-4 RS-232 interface, scan the following barcodes in order.

%0301M%

0

3

%END%

3-2 Single or Multiple-parameter setting by scanning a QR code barcode

User can customize a QR code barcode to set single or multiple parameters. The image platform can set parameters by scanning this single QR code barcode.

1. The data format of the QR code barcode is as following.

%	Parameter set 1	%	Parameter set 2	%	• • •	Parameter set N	%

<Option barcode index><D/H><Alpha. entries>

Note that:

- <Option barcode index> means the corresponding 4 digits of Option barcode.
- <D/H> means D or H character. D means that the type of alphanumeric entry is decimal, and H means that the type of alphanumeric entry is hexadecimal.
- <Alpha. entries> is a character string with various length of 2, 4, or other values.

Example: Set 0401->03 (decimal); 8002->0D0A (hexadecimal); 8202->01 (decimal). The customized QR code barcode contents and symbol are as following.

%0401D03%8002H0D0A%8202D01%

2. Notes of making QR code barcode

The model is chosen as M2. Other requirements, e.g. ECC level, Start mode, etc, are not specified.

Other notes

- The contents of a QR code barcode can include several same <Option barcode index> associated with same or different <Alpha. entries>. In the case of with different <Alpha. entries>, the latest <Alpha. entries> is the valid one.
- If any one of the parameter settings is invalid, the total setting is failed. The invalid setting can be caused by one of the following problems: invalid <Option barcode index>, invalid type of <D/H>, invalid type, length or value range of <Alpha. entries>, etc.

3-3 Interface selection

This image platform supports interfaces such as RS-232 serial wedge, and USB interface. In most of the cases, simply selecting an appropriate cable provided by the manufacturer will work for a specific interface.

Interface selection:

Auto detection- By setting this function, the image platform will automatically detect the RS-232 or USB interface for user.

Multiple-scan setting			Single-scan setting
Option barcode	Option	Alpha. entry	
Interface selection %0101M%	Auto detection (RS-232/USB)	00*	%0101D00% *

%END%

3-4 RS-232 interface

Flow control:

None-The communication only uses TxD and RxD signals without any hardware or software handshaking protocol.

RTS/CTS- If the image platform wants to send the barcode data to host computer, it will issue the RTS signal first, wait for the CTS signal from the host computer, and then perform the normal data communication. If there is no replied CTS signal from the host computer after the timeout duration, the image platform will issue an error indication. By setting (Host idle: Low RTS) or (Host idle: High RTS), the image platform can be set to match the Serial Host RTS line.

XON/XOFF- An XOFF character turns the image platform transmission off until the image platform receives an XON character.

ACK/NAK- After transmitting data, the image platform expects either an ACK (acknowledge) or NAK (not acknowledge) response from the host. When a NAK is received, the image platform transmits the same data again and waits for either an ACK or NAK. After three unsuccessful attempts to send data when NAKs are received, the image platform issues an error indication and discards the data.

Inter-character delay: Refer to Inter-character delay of 3-5 USB interface.

Response delay: This delay is used for serial communication of the image platform when it waits for a handshaking acknowledgment from the host.

Multiple-scan setting			Single-scan setting
Option barcode	Option	Alpha. entry	
Flow control %0301M%	None	00*	%0301D00% *
	RTS/CTS (Host idle: Low RTS)	01	%0301D01%
	RTS/CTS (Host idle: High RTS)	02	%0301D02%
	XON/XOFF	03	%0301D03%
	ACK/NAK	04	%0301D04%
Inter-character delay %0302M%	0 ms	00*	%0302D00% *
	5 ms	01	%0302D01%
	10 ms	02	%0302D02%
	20 ms	03	%0302D03%
	40 ms	04	%0302D04%

Multiple-scan setting			Single-scan setting
Option barcode	Option	Alpha. entry	
	80 ms	05	%0302D05%
Response delay %0304M%	00-99 (100 ms)	00-99	
		00*	%0304D00% *
Baud rate %0305M%	300	00	%0305D00%
	600	01	%0305D01%
	1200	02	%0305D02%
	2400	03	%0305D03%
	4800	04	%0305D04%
	9600	05*	%0305D05% *
	19200	06	%0305D06%
	38400	07	%0305D07%
	57600	08	%0305D08%
	115200	09	%0305D09%
Parity bit %0306M%	None	00*	%0306D00% *
	Odd	01	%0306D01%
	Even	02	%0306D02%
Data bit %0307M%	8 bits	00*	%0307D00% *
	7 bits	01	%0307D01%
Stop bit %0308M%	One bit	00*	%0308D00% *
	Two bits	01	%0308D01%
%END%			

3-5 USB interface

USB device type:

HID keyboard– By setting, the image platform is used as a USB HID keyboard emulation device. The keyboard layout setting follows the setting of keyboard layout in 3-5 USB interface.

USB virtual COM– By setting, the image platform emulates a regular RS232-based COM port. If a Microsoft Windows PC is connected to the image platform, a driver is required to install on the connected PC. The driver will use the next available COM Port number. The driver and the installation guide can be found in the associated CD and on the manufacturer's website. A Windows-based software COM_Text is recommended to display the barcode data in text format. COM_Text emulates some kind of serial-key typing.

Note: When changing USB Device Type, the image platform automatically restarts.

Simple COM Port Emulation- Please contact the manufacturer for the instruction.

Keyboard layout: The image platform supports different national keyboard layouts. Commonly an appropriate encoding system must be selected. Please refer to Character encoding system of 3-6 Scan mode & some global settings for details.

Inter-character delay: This delay is inserted after each data character transmitted. By selecting, the user can change the output speed of the image platform to match the speed of the host USB communication port.

Numeric key:

Alphabetic key- the image platform will output code result as alphabetic key.

Numeric key- the image platform will output code result as pressing numeric keypad ('0', '1', '2', '3', '4', '5', '6', '7', '8', '9', '.', '+', '-', '/', '*' only).

Alt+ keypad- the image platform will output code result as pressing Alt+ numeric key (on keypad). Note that the Num Lock control key must be ON. This setting can be specially adapted for use with different national keyboard layout.

Multiple-scan setting			Single-scan setting
Option barcode	Option	Alpha. entry	
USB device type %0901M%	HID keyboard	00*	%0901D00% *
	HID keyboard for Apple Mac	01	%0901D01%
	USB virtual COM	02	%0901D02%
	Simple COM Port Emulation	03	%0901D03%
Keyboard layout %0902M%	USA	00*	%0902D00% *
	Turkish F	01	%0902D01%
	Turkish Q	02	%0902D02%
	French	03	%0902D03%
	Italian	04	%0902D04%
	Spanish	05	%0902D05%
	Slovak	06	%0902D06%
	Denmark	07	%0902D07%
	Japanese	08	%0902D08%
	German	09	%0902D09%
	Belgian	10	%0902D10%
	Russian	11	%0902D11%
	Czech	12	%0902D12%
Character encoding system %0413M%	Refer to 3-6 Scan mode & some global settings.		
Inter-character delay %0903M%	0 ms	00	%0903D00%
	5 ms	01*	%0903D01% *
	10 ms	02	%0903D02%

Multiple-scan setting			Single-scan setting
Option barcode	Option	Alpha. entry	
	20 ms	03	%0903D03%
	40 ms	04	%0903D04%
	60 ms	05	%0903D05%
Numeric key %0904M%	Alphabetic key	00*	%0904D00% *
	Numeric keypad	01	%0904D01%
	Alt+ keypad	02	%0904D02%

%END%

3-6 Scan mode & some global settings

Scan mode:

Continue-The image platform always keeps scanning, and it does not matter when Stand-by duration is elapsed.

Auto-detection- Good-read off – By setting Enable, the imager will start operating if any nearby object has been detected. The imager will stop scanning when there is a successful reading or no code is decoded after the Stand-by duration elapsed. Once the imager stops scanning, the present object must be removed to enable Auto-detection.

Auto-detection- Good-read on – By setting Enable, the imager will start operating if any nearby object has been detected. The imager stops scanning when no code is successful decoded after the Stand-by duration elapsed. Once the imager stops scanning, the present object must be removed to enable Auto-detection.

Auto-detection sensitivity: In image auto-induction mode, sensitivity refers to the scanner's reaction time to barcode symbols presentation. The scanner with higher sensitivity is easier to start a new decode operation.

Same barcode delay time for 1D symbol: If a 1D barcode has been scanned and output once successfully, the image platform must output the same barcode data beyond delay time. When this feature is set to be “0xFF”, then the delay time is indefinite.

Same barcode delay time for 2D symbol: If a 2D barcode has been scanned and output once successfully, the image platform must output the same barcode data beyond delay time. When this feature is set to be “0xFF”, then the delay time is indefinite.

Double confirm: If it is enabled, the image platform will require a several times of same-decoded-data to confirm a valid reading.

Global Max./Min. code length for 1D symbol: These two lengths are defined as the valid range of decoded 1D barcode data length. Make sure that the minimum length setting is no greater than the maximum length setting, or otherwise the labels of the symbol will not be readable. In particular, the same value can be set for both minimum and maximum reading length to force the fixed length barcode decoded.

Notes:

1. Please set the max./min. length for individual barcode in later sections, if special demand is requested.
2. The number of check digits is included in max./min. code length.
3. These two settings have no effect on the symbols with fixed-length, e.g. UPC-A, UPC-E, EAN-13, EAN-8 and China Post.

Global G1-G6 string selection: The image platform offer one or two string group for all symbols. By setting one or two digits to indicate which string group you want to apply. You may refer to 3-40 G1-G6 & C1-C3 & FN1 substitution string setting and 3-42 G1-G4 string position & Code ID position.

Example: Group 1 → set 01 or 10. Group 2 and 4 → set 24 or 42.

All valid settings include 00, 01, 02, 03, 04, 05, 06, 10, 11, 12, 13, 14, 15, 16, 20, 21, 22, 23, 24, 25, 26,

30, 31, 32, 33, 34, 35, 36, 40, 41, 42, 43, 44, 45, 46, 50, 51, 52, 53, 54, 55, 56, 60, 61, 62, 63, 64, 65 and 66.

Element amendment: If it is enabled, the image platform can read the barcode comprised with bars and spaces in different scale.

Character output restraint:

Printable character only- If this option is selected, the image platform will output the printable characters only, i.e. in ASCII from 20H to 7EH.

Alphanumeric character only- If this option is selected, the image platform will output the alphanumeric characters only, i.e. “A”-“Z”, “a”-“z”, “0”-“9”.

Decoder optimization: If it is enabled, the image platform will optimize the decoder with error correction. This function is not effective for all types of barcode.

Data output delay in continue-scan mode: If it is enabled, in the continue-scan mode, the image platform can store the data while continue-scanning. The image platform will output the data after the predefined delay elapsed. The maximum storage of data is 1000 characters. If this parameter is set to be “00”, the image platform will not store data. And if the parameter is set to be “FF”, the image platform will output data after stopping scanning.

Character encoding system: A character encoding system consists of a code that pairs each character from a given repertoire. Common examples include Morse code, the Baudot code, the ASCII and Unicode. If the data received does not display with the proper characters (domestic language, e.g. Chinese), it maybe because the barcode being scanned was created using a character encoding system that is different from the one the host program is expecting. Try alternate options to find the proper one.

Complete data output before next decode attempt: This setting is active only when USB device type is set as “HID keyboard” or “HID keyboard for Apple Mac”, refer to 3-5 USB interface. If it is enabled, the image platform will not start next decode attempt until previous data output is completed.

Multiple-scan setting			Single-scan setting
Option barcode	Option	Alpha. entry	
Scan mode %0401M%	Continue	03	%0401D03%
	Auto-detection- Good-read on	06*	%0401D06% *
	Auto-detection- Good-read off	07	%0401D07%
Auto-detection sensitivity %0604M%	High	00*	%0604D00% *
	Low	01	%0604D01%
Standby duration %0402M%	5 seconds	00	%0402D00%
	10 seconds	01*	%0402D01% *
	15 seconds	02	%0402D02%
	30 seconds	03	%0402D03%
	1 minute	04	%0402D04%
	2 minutes	05	%0402D05%
	3 minutes	06	%0402D06%
	5 minutes	07	%0402D07%
	10 minutes	08	%0402D08%
	15 minutes	09	%0402D09%
	30 minutes	10	%0402D10%
	60 minutes	11	%0402D11%
Same barcode delay time for 1D symbol %0403M%	00-FF_{16} (50 ms)	00-FF_{16}	
		00	%0403H00%
		04*	%0403H04% *
Same barcode delay time for 2D symbol %0415M%	00-FF_{16} (50 ms)	00-FF_{16}	
		00	%0415H00%

Multiple-scan setting			Single-scan setting
Option barcode	Option	Alpha. entry	
		08*	%0415H08% *
Double confirm %0404M%	00-09 (00: no)	00-09	
		00*	%0404D00% *
Global max. code length for 1D symbol %0405M%	04-99	04-99	
		99*	%0405D99% *
Global min. code length for 1D symbol %0406M%	01-99	01-99	
		04*	%0406D04% *
Global G1-G6 string selection %0407M%	00-66	00-66	
		00*	%0407D00% *
Element amendment %0408M%	Disable	00	%0408D00%
	Enable	01*	%0408D01% *
Character output restraint %0409M%	None	00*	%0409D00% *
	Printable character only	01	%0409D01%
	Alphanumeric character only	02	%0409D02%
Decoder optimization %0410M%	Disable	00	%0410D00%
	Enable	01*	%0410D01% *
Data output delay in continue-scan mode %0411M%	00-99 (100 ms) FF (Never)	$00\text{-}FF_{16}$	
		00*	%0411H00% *
Character encoding system %0413M%	ASCII	00*	%0413D00% *
	UTF-8	01	%0413D01%
	Windows-1251	02	%0413D02%
Complete data output before	Disable	00*	%0414D00%

Multiple-scan setting			Single-scan setting
Option barcode	Option	Alpha. entry	
next decode attempt %0414M%	Enable	01	%0414D01%

%END%

3-7 LED and Beeper Indication

Power on alert: After power-on the image platform will generate an alert signal to indicate a successful self-test.

LED indication: After each successful reading, the LED above the image platform will light up to indicate a good barcode reading.

Beeper indication: After each successful reading, the image platform will beep to indicate a good barcode reading, and its beep tone duration is adjustable.

Beep tone duration: This parameter can be adjusted for a good reading upon favorite usage.

Volume of beeper: This parameter can be adjusted for different level of the volume of the beeper. This parameter can also be adjusted by pushing Beeper push button.

Beep tone: This parameter can be adjusted for a favorite ring tone. This parameter can also be adjusted by pushing Beeper push button.

Multiple-scan setting			Single-scan setting
Option barcode	Option	Alpha. entry	
Power on alert %0501M%	Disable	00	%0501D00%
	Enable	01*	%0501D01% *
LED indication %0502M%	Disable	00	%0502D00%
	Enable	01*	%0502D01% *
Beeper indication %0503M%	Disable	00	%0503D00%
	Enable	01*	%0503D01% *
Beep tone duration %0504M%	01-09 (10 ms)	01-09	
		05*	%0504D05% *
Volume of beeper %0505M%	Low	00	%0505D00%
	Middle	01	%0505D01%
	High	02*	%0505D02% *
Beeper Tone %0506M%	Type 1	00*	%0506D00% *
	Type 2	01	%0506D01%
	Type 3	02	%0506D02%

%END%

3-8 LED illumination level

Decode illumination mode: Enable illumination causes the embedded scanner to turn on the illumination to aid decoding. Disable illumination to turn off illumination for the embedded scanner during decoding. Better quality images could be obtained with illumination support. The effectiveness of the illumination decreases as the distance to the target increases.

Level of decode illumination: This parameter can be adjusted for different level of decode illumination.

Illumination mode of Auto-detection:

Always off- Illumination LED will be always turned off.

Enable illumination in low light conditions- In low light conditions, the scanner will turn on illumination LED automatically to ensure normal work. While in other light conditions, the illumination LED will be turned off automatically.

Always on- Illumination LED will be always turned on (Default).

Note: This function is only valid in Auto-detection mode.

Multiple-scan setting			Single-scan setting
Option barcode	**Option**	**Alpha. entry**	
Decode illumination mode %9001M%	Always Off	00	%9001D00%
	Always On	01	%9001D01%
	On when reading	03*	%9001D03%
Level of decode illumination %9003M%	Disable decode illumination	00	%9003D00%
	Low	01	%9003D01%
	Middle	02*	%9003D02% *
	High	03	%9003D03%
Illumination mode of Auto-detection %0605M%	Always off	00	%0605D00%
	Enable illumination in low light conditions	01	%0605D01%
	Always on	02*	%0605D02% *

%END%

3-9 Single type of barcode, Multi-symbols read

1D symbols read: A global setting of 1D symbols readability.

2D symbols read: A global setting of 2D symbols readability. Note: When QR Code is disabled, the image platform will not read setting/programming QR Code symbols.

Multi-symbols read: By setting Enable, the image platform allows to read multiple symbols in one image. By setting Disable, the image platform will only read the symbol closest to the center area in the image.

Multiple-scan setting			Single-scan setting
Option barcode	Option	Alpha. entry	
1D symbols read %1005M%	Follow respective 1D symbol setting	00*	%1005D00% *
	All 1D Disable	01	%1005D01%
2D symbols read %1001M%	Follow respective 2D symbol setting	00*	%1001D00% *
	All 2D Disable	01	%1001D01%
	All 2D Enable	02	%1001D02%
	Only PDF417 Enable	03	%1001D03%
	Only QR code Enable	04	%1001D04%
	Only Data Matrix Enable	05	%1001D05%
	Only MaxiCode Enable	06	%1001D06%
	Only Aztec Code Enable	07	%1001D07%
	Only Han Xin Code Enable	08	%1001D08%
Multi-symbols read %1003M%	Disable	00*	%1003D00% *
	Enable	01	%1003D01%

%END%

3-10 DPM, Structured append, and Mobile screen read

DPM format read: By setting Enable, the image platform can read 2D symbols in DPM (Direct Park Marking) format. Some barcodes in DPM format are shown below.

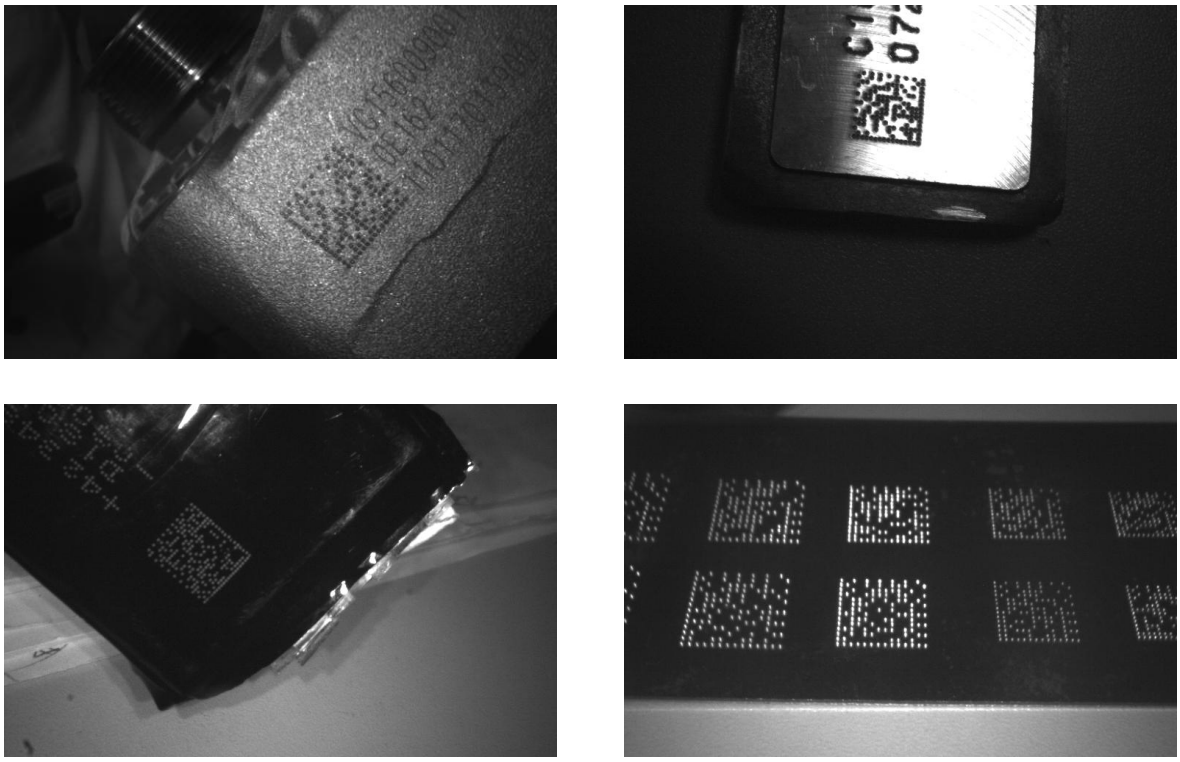

Structured append symbols read: By setting Enable, the image platform will output data only when all Structured Append symbols have been decoded. The symbol types which support Structured Append include QR code, Aztec code, PDF417 and DataMatrix. The lower part of below figure shows an example of four Structured Append symbols, with the same data as that in the upper QR code symbol.

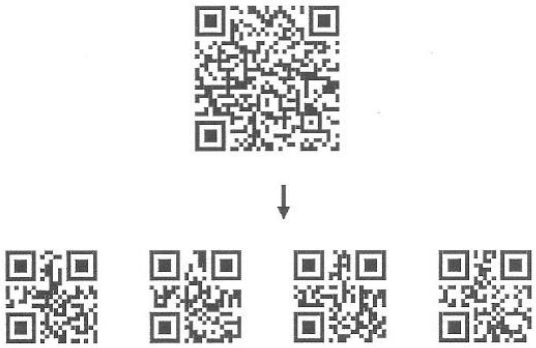

Single symbol (above) and Structured Append series of symbols (below) encoding
“ABCDEFGHIJKMNOPQRSTUVWXYZ0123456789ABCDEFGHIJKLMNOPQRSTUVWXYZ”

Mobile screen read: By setting enable, the image platform can read barcodes on a mobile screen better. However, this will slow the reading speed of normal barcodes a little bit.

Multiple-scan setting			Single-scan setting
Option barcode	Option	Alpha. entry	
DPM format read %1002M%	Disable	00*	%1002D00% *
	Enable	01	%1002D01%
Structured append symbols read %1006M%	Disable	00*	%1006D00% *
	Enable	01	%1006D01%
Mobile screen read %1007M%	Disable	00	%1007D00%
	Enable	01*	%1007D01% *

%END%

3-11 UPC-A

Read:

Format

System character	Data digits (10 digits)	Check digit (1 digit)

Check digit verification: The check digit is optional.

Check digit trans.: By setting Enable, check digit will be transmitted.

Code ID setting: Code ID is a one-or-two-character string used to represent the symbol upon a succeeding reading. If you want application to transmit Code ID, you must set Code ID transmission to be enabled. Refer to 3-42 String transmission.

Insertion group selection: Refer to Global insertion group selection of 3-6 Scan mode & some global settings.

Supplement digits: The Supplement digits barcode is the supplemental 2 or 5 characters.

Format

System character	Data digits (10 digits)	Check digit (1 digit)	Supplement digits 2 or 5

Truncation/Expansion:

Truncate leading zeros - The leading “0” digits of UPC-A data characters can be truncated when the feature is enabled.

Example: Barcode “001234567895”,

Output: “1234567895”.

Expand to EAN-13 - It extends to 13-digits with a “0” leading digit when the feature is enabled.

Example: Barcode “001234567895”,

Output: “0001234567895”.

Truncate system character - The system character of UPC-A data can be truncated when the feature is enabled.

Example: Barcode “001234567895”,

Output: “01234567895”.

Add country code - The country code (“0” for USA) can be added when the feature is enabled.

Example: Barcode “001234567895”,

Output: “0001234567895”.

Multiple-scan setting			Single-scan setting
Option barcode	Option	Alpha. entry	
Read %1101M%	Disable	00	%1101D00%
	Enable	01*	%1101D01% *
Check digit verification %1102M%	Disable	00	%1102D00%
	Enable	01*	%1102D01% *
Check digit trans. %1103M%	Disable	00	%1103D00%
	Enable	01*	%1103D01% *
Code ID setting %1104M%	00-FF_{16} (ASCII)	00-FF_{16}	
		<A>*	%1104H41% *
Insert group selection %1105M%	00-66	00-66	
		00*	%1105D00%
Supplement digits %1106M%	None	00*	%1106D00% *
	2 digits	01	%1106D01%
	5 digits	02	%1106D02%
	2 or 5 digits	03	%1106D03%
Truncation/Expansion %1107M%	None	00*	%1107D00% *
	Truncate leading zeros	01	%1107D01%
	Expand to EAN-13	02	%1107D02%
	Truncate system character	03	%1107D03%
	Add country code	04	%1107D04%

%END%

3-12 UPC-E

Read:

Format

System character “0”	Data digits (6 digits)	Check digit (1 digit)

Check digit verification: The check digit is optional and made as the sum of the numerical value of the data digits.

Check digit trans.: By setting Enable, check digit will be transmitted.

Code ID setting: Refer to Code ID setting of 3-11 UPC-A.

Insertion group selection: Refer to Insertion group selection of 3-11 UPC-A.

Supplement digits:

Format

System character “0”	Data digits (6 digits)	Check digit (1 digit)	Supplement digits 2 or 5

Truncation/Expansion:

Truncate leading zeros - The leading “0” digits of UPC-E data characters can be truncated when the feature is enabled.

Example: Barcode “00123457”,

Output: “123457”.

Expand to EAN-13 - It extends to 13-digits with a “0” leading digit when the feature is enabled.

Example: Barcode “00123457”,

Output: “0001234000057”.

Expand to UPC-A - It extends to 12-digits when the feature is set to be enabled.

Example: Barcode “00123457”,

Output: “001234000057”.

Truncate system character - The system character “0” of UPC-E data can be truncated when the feature is enabled.

Example: Barcode “00123457”,

Output: “0123457”.

Add country code - The country code (“0” for USA) can be added when the feature is enabled.

Example: Barcode “00123457”,

Output: “000123457”.

Multiple-scan setting			Single-scan setting
Option barcode	Option	Alpha. entry	
Read %1201M%	Disable	00	%1201D00%
	Enable	01*	%1201D01% *
Check digit verification %1202M%	Disable	00	%1202D00%
	Enable	01*	%1202D01% *
Check digit trans. %1203M%	Disable	00	%1203D00%
	Enable	01*	%1203D01% *
Code ID setting %1204M%	00-FF_{16} (ASCII)	00-FF_{16}	
		<D>*	%1204H44% *
Insert group selection %1205M%	00-66	00-66	
		00*	%1205D00% *
Supplement digits %1206M%	None	00*	%1206D00% *
	2 digits	01	%1206D01%
	5 digits	02	%1206D02%
	2 or 5 digits	03	%1206D03%
Truncation/Expansion %1207M%	None	00*	%1207D00% *
	Truncate leading zeros	01	%1207D01%
	Expand to EAN-13	02	%1207D02%
	Expand to UPC-A	03	%1207D03%
	Truncate system character	04	%1207D04%
	Add country code	05	%1207D05%

%END%

3-13 UPC-E1

Read:

Format

System character “1”	Data digits (6 digits)	Check digit (1 digit)

Check digit verification: The check digit is optional and made as the sum of the numerical value of the data digits.

Check digit trans.: By setting Enable, check digit will be transmitted.

Code ID setting: Refer to Code ID setting of 3-11 UPC-A.

Insertion group selection: Refer to Insertion group selection of 3-11 UPC-A.

Supplement digits:

Format

System character “1”	Data digits (6 digits)	Check digit (1 digit)	Supplement digits 2 or 5

Truncation/Expansion:

Expand to EAN -13- It extends to 13-digits with “0” digits when the feature is enabled.

Example: Barcode “10012341”,

Output: “0100120000031”.

Expand to UPC-A - It extends to 12-digits when the feature is set to be enabled.

Example: Barcode “10012341”,

Output: “100120000031”.

Truncate system character - The system character “1” of UPC-E1 data can be truncated when the feature is enabled.

Example: Barcode “10012341”,

Output: “0012341”.

Add country code - The country code (“0” for USA) can be added when the feature is enabled.

Example: Barcode “10012341”,

Output: “010012341”.

Multiple-scan setting			Single-scan setting
Option barcode	Option	Alpha. entry	
Read %3401M%	Disable	00	%3401D00%
	Enable	01*	%3401D01% *
Check digit verification %3402M%	Disable	00	%3402D00%
	Enable	01*	%3402D01% *
Check digit trans. %3403M%	Disable	00	%3403D00%
	Enable	01*	%3403D01% *
Code ID setting %3404M%	00-FF$_{16}$ (ASCII)	00-FF$_{16}$	
		<D>*	%3404H44% *
Insert group selection %3405M%	00-66	00-66	
		00*	%3405D00% *
Supplement digits %3406M%	None	00*	%3406D00% *
	2 digits	01	%3406D01%
	5 digits	02	%3406D02%
	2 or 5 digits	03	%3406D03%
Truncation/Expansion %3407M%	None	00*	%3407D00% *
	Expand to EAN-13	02	%3407D02%
	Expand to UPC-A	03	%3407D03%
	Truncate system character	04	%3407D04%
	Add country code	05	%3407D05%

%END%

3-14 EAN-13 (ISBN/ISSN)

Read:

Format

Data digits (12 digits)	Check digit (1 digit)

Check digit verification: The check digit is optional and made as the sum of the numerical value of the data digits.

Check digit transmission: By setting Enable, check digit will be transmitted.

EAN-13 code ID setting: Refer to Code ID setting of 3-11 UPC-A.

Insertion group selection: Refer to Insertion group selection of 3-11 UPC-A.

Supplement digits:

Format

Data digits (12 digits)	Check digit (1 digit)	Supplement digits 2 or 5

ISBN/ISSN conversion: The ISBN (International Standard Book Number, or Bookland EAN) and ISSN (International Standard Serial Number) are two kinds of barcode for books and magazines. The ISBN is 10 digits with leading “978” and the ISSN is 8 digits with leading “977” of the EAN-13 symbol.

Example:

Barcode “9780194315104”, Output: “019431510X”.

Barcode “9771005180004”, Output: “10051805”.

ISBN/ISSN code ID setting: Refer to Code ID setting of 3-11 UPC-A.

Multiple-scan setting			Single-scan setting
Option barcode	Option	Alpha. entry	
Read %1301M%	Disable	00	%1301D00%
	Enable	01*	%1301D01% *
Check digit verification %1302M%	Disable	00	%1302D00%
	Enable	01*	%1302D01% *
Check digit transmission %1303M%	Disable	00	%1303D00%
	Enable	01*	%1303D01% *
EAN-13 code ID setting %1304M%	00-FF_{16} (ASCII)	00-FF_{16}	
		<A>*	%1304H41% *
Insert group selection %1305M%	00-66	00-66	
		00*	%1305D00% *
Supplement digits %1306M%	None	00*	%1306D00% *
	2 digits	01	%1306D01%
	5 digits	02	%1306D02%
	2 or 5 digits	03	%1306D03%
ISBN/ISSN conversion %1307M%	Disable	00*	%1307D00% *
	Enable	01	%1307D01%
ISBN/ISSN code ID setting %1309M%	00-FF_{16} (ASCII)	00-FF_{16}	
		<B>*	%1309H42% *

%END%

3-15 EAN-8

Read:

Format

Data digits (7 digits)	Check digit (1 digit)

Check digit verification: The check digit is optional and made as the sum of the numerical value of the data digits.

Check digit trans.: By setting Enable, check digit will be transmitted.

Code ID setting: Refer to Code ID setting of 3-11 UPC-A.

Insertion group selection: Refer to Insertion group selection of 3-11 UPC-A.

Supplement digits:

Format

Data digits (7 digits)	Check digit (1 digit)	Supplement Digits 2 or 5

Truncation/Expansion: Refer to Truncation/Expansion of 3-11 UPC-A.

Multiple-scan setting			Single-scan setting
Option barcode	Option	Alpha. entry	
Read %1401M%	Disable	00	%1401D00%
	Enable	01*	%1401D01% *
Check digit verification %1402M%	Disable	00	%1402D00%
	Enable	01*	%1402D01% *
Check digit trans. %1403M%	Disable	00	%1403D00%
	Enable	01*	%1403D01% *
Code ID setting %1404M%	00-FF_{16} (ASCII)	00-FF_{16}	
		<C>*	%1404H42% *
Insert group selection %1405M%	00-66	00-66	
		00*	%1405D00% *
Supplement digits %1406M%	None	00*	%1406D00% *
	2 digits	01	%1406D01%
	5 digits	02	%1406D02%
	2 or 5 digits	03	%1406D03%
Truncation/Expansion %1407M%	None	00*	%1407D00% *
	Truncate leading zero	01	%1407D01%
	Expand to EAN-13	02	%1407D02%

%END%

3-16 Code 39 (Code 32, Trioptic Code 39)

Read:

Format

Start character(*)	Data digits (variable)	Check digit (1 digit, optional)	End character(*)

Check digit verification: The check digit is optional and made as the sum module 43 of the numerical value of the data digits.

Check digit transmission: By setting Enable, check digit will be transmitted.

Max./Min. code length: Each symbol has own max./min. code length. If both setting of max./min. code length are "00"s, the setting of global max./min. code length is effective. The length is defined as to the actual barcode data length to be sent. Label with length exceeds these limits will be rejected. Make sure that the minimum length setting is no greater than the maximum length setting, or otherwise all the labels of the symbol will not be readable. In particular, you can see the same value for both minimum and maximum reading length to force the fixed length barcode decoded.

Code ID setting: Refer to Code ID setting of 3-11 UPC-A.

Insertion group selection: Refer to Insertion group selection of 3-11 UPC-A.

Start/End transmission: The start and end characters of Code 39 are "*"s. You can transmit all data digits including two "*"s.

"*" as data character: By setting Enable, "*" can be recognized as data character.

Convert Code 39 to Code 32: Code 32 is a variant of Code 39 used by the Italian pharmaceutical industry. Note that Code 39 must be enabled in order for this parameter to function.

Format of Code 32

"A" (optional)	Data digits (8 digits)	Check digit (1 digit)

Code 32 Prefix "A" transmission: By setting Enable, the prefix character "A" can be added to all Code 32 barcodes.

Trioptic Code 39 read: Trioptic Code 39 is a variant of Code 39 used in the marking of magnetic tapes and computer cartridges. Trioptic Code 39 symbols always contain six characters.

Format

Start character($)	Data digits (6 digits)	End character($)

Trioptic Code 39 Start/End transmission: The start and end characters of Trioptic Code 39 are "$"s. You can transmit all data digits including two "$"s.

Multiple-scan setting			Single-scan setting
Option barcode	Option	Alpha. entry	
Read %1501M%	Disable	00	%1501D00%
	Enable	01*	%1501D01% *
Check digit verification %1502M%	Disable	00*	%1502D00% *
	Enable	01	%1502D01%
Check digit transmission %1503M%	Disable	00*	%1503D00% *
	Enable	01	%1503D01%
Max. code length %1504M%	00-99	00-99	
		00*	%1504D00% *
Min. code length %1505M%	00-99	00-99	
		01*	%1505D01% *
Code ID setting %1506M%	00-FF_{16} (ASCII)	00-FF_{16}	
		<M>*	%1506H4D% *
Insert group selection %1507M%	00-66	00-66	
		00*	%1507D00% *
Format %1508M%	Standard	00*	%1508D00% *
	Full ASCII	01	%1508D01%
Start/End transmission %1509M%	Disable	00*	%1509D00% *
	Enable	01	%1509D01%
"*" as data character %1510M%	Disable	00*	%1510D00% *
	Enable	01	%1510D01%
Convert Code 39 to Code 32	Disable	00*	%1511D00% *

Multiple-scan setting			Single-scan setting
Option barcode	Option	Alpha. entry	
%1511M%	Enable	01	%1511D01%
Code 32 Prefix “A” transmission %1512M%	Disable	00*	%1512D00% *
	Enable	01	%1512D01%
Trioptic Code 39 read %1513M%	Disable	00*	%1513D00% *
	Enable	01	%1513D01%
Trioptic Code 39 Start/End transmission %1514M%	Disable	00*	%1514D00% *
	Enable	01	%1514D01%
%END%			

3-17 Interleaved 2 of 5

Read:

Format

Data digits (Variable)	Check digit (1 digit, optional)

Check digit verification: The check digit is made as the sum module 10 of the numerical values of all data digits. There are two optional check digit algorithms: the specified Uniform Symbol Specification (USS) and the Optical Product Code Council (OPCC).

Check digit transmission: By setting Enable, check digit will be transmitted.

Max./Min. code length: Refer to Max./Min. code length of 3-16 Code 39 (Code 32, Trioptic Code 39).

Code ID setting: Refer to Code ID setting of 3-11 UPC-A.

Insertion group selection: Refer to Insertion group selection of 3-11 UPC-A.

Multiple-scan setting			Single-scan setting
Option barcode	Option	Alpha. entry	
Read %1601M%	Disable	00	%1601D00%
	Enable	01*	%1601D01% *
Check digit verification %1602M%	Disable	00*	%1602D00% *
	USS	01	%1602D01%
	OPCC	02	%1602D02%
Check digit transmission %1603M%	Disable	00*	%1603D00% *
	Enable	01	%1603D01%
Max. code length %1604M%	00-99	00-99	
		00*	%1604D00% *
Min. code length %1605M%	00-99	00-99	
		06*	%1605D06% *
Code ID setting %1606M%	00-FF_{16} (ASCII)	00-FF_{16}	
		<I>*	%1606H49% *
Insert group selection %1607M%	00-66	00-66	
		00*	%1607D00% *

%END%

3-18 Industrial 2 of 5 (Discrete 2 of 5)

Read:

Format

Data digits (variable)

Max./Min. code length: Refer to Max./Min. code length of 3-16 Code 39 (Code 32, Trioptic Code 39).

Code ID setting: Refer to Code ID setting of 3-11 UPC-A.

Insertion group selection: Refer to Insertion group selection of 3-11 UPC-A.

Multiple-scan setting			Single-scan setting
Option barcode	Option	Alpha. entry	
Read %1701M%	Disable	00*	%1701D00% *
	Enable	01	%1701D01%
Max. code length %1702M%	00-99	00-99	
		00*	%1702D00% *
Min. code length %1703M%	00-99	00-99	
		00*	%1703D00% *
Code ID setting %1704M%	00-FF$_{16}$ (ASCII)	00-FF$_{16}$	
		<H>*	%1704H48% *
Insert group selection %1705M%	00-66	00-66	
		00*	%1705D00% *

%END%

3-19 Matrix 2 of 5

Read:

Format

Data digits (variable)	Check digit (1 digit, optional)

Check digit verification: The check digit is made as the sum module 10 of the numerical values of all data digits.

Check digit transmission: By setting Enable, check digit will be transmitted.

Max./Min. code length: Refer to Max./Min. code length of 3-16 Code 39 (Code 32, Trioptic Code 39).

Code ID setting: Refer to Code ID setting of 3-11 UPC-A.

Insertion group selection: Refer to Insertion group selection of 3-11 UPC-A.

Multiple-scan setting			Single-scan setting
Option barcode	Option	Alpha. entry	
Read %1801M%	Disable	00	%1801D00%
	Enable	01*	%1801D01% *
Check digit verification %1802M%	Disable	00*	%1802D00% *
	Enable	01	%1802D01%
Check digit transmission %1803M%	Disable	00*	%1803D00% *
	Enable	01	%1803D01%
Max. code length %1804M%	00-99	00-99	
		00*	%1804D00% *
Min. code length %1805M%	00-99	00-99	
		06*	%1805D06% *
Code ID setting %1806M%	00-FF_{16} (ASCII)	00-FF_{16}	
		<X>*	%1806H58% *
Insert group selection %1807M%	00-66	00-66	
		00*	%1807D00% *

%END%

3-20 Codabar

Read:

Format

Start	Data digits (variable)	Check digit (1 digit, optional)	End

Check digit verification: The check digit is made as the sum module 16 of the numerical values of all data digits.

Check digit transmission: By setting Enable, check digit will be transmitted.

Max./Min. code length: Refer to Max./Min. code length of 3-16 Code 39 (Code 32, Trioptic Code 39).

Code ID setting: Refer to Code ID setting of 3-11 UPC-A.

Insertion group selection: Refer to Insertion group selection of 3-11 UPC-A.

Start/End type: Codabar has four pairs of Start/End pattern, you may select one pair to match your application.

Start/End transmission: Refer to Start/End transmission of 3-16 Code 39 (Code 32, Trioptic Code 39).

Start/End character equality: By setting Enable, the start and end character of a Codabar barcode must be the same.

Multiple-scan setting			Single-scan setting
Option barcode	Option	Alpha. entry	
Read %1901M%	Disable	00	%1901D00%
	Enable	01*	%1901D01% *
Check digit verification %1902M%	Disable	00*	%1902D00% *
	Enable	01	%1902D01%
Check digit transmission %1903M%	Disable	00*	%1903D00% *
	Enable	01	%1903D01%
Max. code length %1904M%	00-99	00-99	
		00*	%1904D00% *
Min. code length %1905M%	00-99	00-99	
		00*	%1905D00% *
Code ID setting %1906M%	00-FF_{16} (ASCII)	00-FF_{16}	
		<N>*	%1906H4E% *

Multiple-scan setting			Single-scan setting
Option barcode	Option	Alpha. entry	
Insert group selection %1907M%	00-66	00-66	
		00*	%1907D00% *
Start/End type %1908M%	ABCD/ABCD	00*	%1908D00% *
	abcd/abcd	01	%1908D01%
	ABCD/TN⋆E	02	%1908D02%
	abcd/tn⋆e	03	%1908D03%
Start/End transmission %1909M%	Disable	00*	%1909D00% *
	Enable	01	%1909D01%
Start/End character equality %1910M%	Disable	00*	%1910D00% *
	Enable	01	%1910D01%

%END%

3-21 Code 128

Read:

Format

Data digits (variable)	Check digit (1 digit, optional)

Check digit verification: The check digit is made as the sum module 103 of all data digits.

Check digit transmission: By setting Enable, check digit will be transmitted.

Max./Min. code length: Refer to Max./Min. code length of 3-16 Code 39 (Code 32, Trioptic Code 39).

Code ID setting: Refer to Code ID setting of 3-11 UPC-A.

Insertion group selection: Refer to Insertion group selection of 3-11 UPC-A.

Truncate leading zeros: The leading “0” digits of Code 128 barcode characters can be truncated when the feature is enabled.

Multiple-scan setting			Single-scan setting
Option barcode	Option	Alpha. entry	
Read %2001M%	Disable	00	%2001D00%
	Enable	01*	%2001D01% *
Check digit verification %2002M%	Disable	00	%2002D00%
	Enable	01*	%2002D01% *
Check digit transmission %2003M%	Disable	00*	%2003D00% *
	Reserved	01	%2003D01%
Max. code length %2004M%	00-99	00-99	
		00*	%2004D00% *
Min. code length %2005M%	00-99	00-99	
		01*	%2005D01% *
Code ID setting %2006M%	00-FF_{16} (ASCII)	00-FF_{16}	
		<K>*	%2006H4B% *
Insert group selection %2007M%	00-66	00-66	
		00*	%2007D00% *
Truncate leading zeros %2008M%	Disable	00*	%2008D00% *
	All leading “0”s	01	%2008D01%
	Only the first “0”	02	%2008D02%

%END%

3-22 UCC/EAN 128 (GS1-128)

UCC/EAN 128 and GS1-128 are the same kind of barcode symbols with same standard.

Read:

Format

Data digits (variable)	Check digit (1 digit, optional)

Check digit verification: The check digit is made as the sum module 103 of all data digits.

Check digit transmission: By setting Enable, check digit will be transmitted.

Max. /Min. code length: Refer to Max./Min. code length of 3-16 Code 39 (Code 32, Trioptic Code 39).

Code ID setting: Refer to Code ID setting of 3-11 UPC-A.

Insertion group selection: Refer to Insertion group selection of 3-11 UPC-A.

Truncate leading zeros: Refer to Truncate leading zeros of 3-21 Code 128.

Multiple-scan setting			Single-scan setting
Option barcode	Option	Alpha. entry	
Read %2501M%	Disable	00	%2501D00%
	Enable	01*	%2501D01% *
Check digit verification %2502M%	Disable	00	%2502D00%
	Enable	01*	%2502D01% *
Check digit transmission %2503M%	Disable	00*	%2503D00% *
	Reserved	01	%2503D01%
Max. code length %2504M%	00-99	00-99	
		00*	%2504D00% *
Min. code length %2505M%	00-99	00-99	
		01*	%2505D01% *
Code ID setting %2506M%	00-FF_{16} (ASCII)	00-FF_{16}	
		<K>*	%2506H4B% *
Insert group selection %2507M%	00-66	00-66	
		00*	%2507D00% *
Truncate leading zeros %2508M%	Disable	00*	%2508D00% *
	All leading “0”s	01	%2508D01%
	Only the first “0”	02	%2508D02%

%END%

3-23 ISBT 128

Read:

Format

"=" or "&"	Data digits (variable)	Check digit (1 digit, optional)

Check digit verification: The check digit is made as the sum module 103 of all data digits.

Check digit transmission: By setting Enable, check digit will be transmitted.

Max./Min. code length: Refer to Max./Min. code length of 3-16 Code 39 (Code 32, Trioptic Code 39).

Code ID setting: Refer to Code ID setting of 3-11 UPC-A.

Insertion group selection: Refer to Insertion group selection of 3-11 UPC-A.

Multiple-scan setting			Single-scan setting
Option barcode	Option	Alpha. entry	
Read %3301M%	Disable	00	%3301D00%
	Enable	01*	%3301D01% *
Check digit verification %3302M%	Disable	00	%3302D00%
	Enable	01*	%3302D01% *
Check digit transmission %3303M%	Disable	00*	%3303D00% *
	Reserved	01	%3303D01%
Max. code length %3304M%	00-99	00-99	
		00*	%3304D00% *
Min. code length %3305M%	00-99	00-99	
		01*	%3305D01% *
Code ID setting %3306M%	00-FF$_{16}$ (ASCII)	00-FF$_{16}$	
		<K>*	%3306H4B% *
Insert group selection %3307M%	00-66	00-66	
		00*	%3307D00% *

%END%

3-24 Code 93

Read:

Format

Data digits (variable)	Check digits (2 digits, optional)

Check digit verification: The check digit is made as the sum module 47 of the numerical values of all data digits.

Check digit transmission: By setting Enable, check digit will be transmitted.

Max./Min. code length: Refer to Max./Min. code length of 3-16 Code 39 (Code 32, Trioptic Code 39).

Code ID setting: Refer to Code ID setting of 3-11 UPC-A.

Insertion group selection: Refer to Insertion group selection of 3-11 UPC-A.

Multiple-scan setting			Single-scan setting
Option barcode	Option	Alpha. entry	
Read %2101M%	Disable	00	%2101D00%
	Enable	01*	%2101D01% *
Check digit verification %2102M%	Disable	00	%2102D00%
	Enable	01*	%2102D01% *
Check digit transmission %2103M%	Disable	00*	%2103D00% *
	Enable	01	%2103D01%
Max. code length %2104M%	00-99	00-99	
		00*	%2104D00% *
Min. code length %2105M%	00-99	00-99	
		01*	%2105D01% *
Code ID setting %2106M%	00-FF$_{16}$ (ASCII)	00-FF$_{16}$	
		<L>*	%2106H4C% *
Insert group selection %2107M%	00-66	00-66	
		00*	%2107D00% *

%END%

3-25 Code 11

Read:

Format

Data digits (variable)	Check digit 1 (optional)	Check digit 2 (optional)

Check digit verification: The check digit is presented as the sum module 11 of all data digits.

Check digit transmission: By setting Enable, check digit 1 and check digit 2 will be transmitted upon your selected check digit verification method.

Max./Min. code length: Refer to Max./Min. code length of 3-16 Code 39 (Code 32, Trioptic Code 39).

Code ID setting: Refer to Code ID setting of 3-11 UPC-A.

Insertion group selection: Refer to Insertion group selection of 3-11 UPC-A.

Multiple-scan setting			Single-scan setting
Option barcode	Option	Alpha. entry	
Read %2201M%	Disable	00*	%2201D00% *
	Enable	01	%2201D01%
Check digit verification %2202M%	Disable	00	%2202D00%
	One digit	01*	%2202D01% *
	Reserved	02	%2202D02%
	Reserved	03	%2202D03%
Check digit transmission %2203M%	Disable	00*	%2203D00% *
	Enable	01	%2203D01%
Max. code length %2204M%	00-99	00-99	
		00*	%2204D00% *
Min. code length %2205M%	00-99	00-99	
		00*	%2205D00% *
Code ID setting %2206M%	00-FF_{16} (ASCII)	00-FF_{16}	
		<V>*	%2206H56% *
Insert group selection %2207M%	00-66	00-66	
		00*	%2207D00% *

%END%

3-26 MSI/Plessey

Read:

Format

Data digits (variable)	Check digit 1 (optional)	Check digit 2 (optional)

Check digit verification: The MSI/Plessey has one or two optional check digits. There are three methods of verifying check digits, i.e. Mod10, Mod10/10 and Mod 11/10. The check digit 1 and check digit 2 will be calculated as the sum module 10 or 11 of the data digits.

Check digit transmission: By setting Enable, check digit 1 and check digit 2 will be transmitted upon your selected check digit verification method.

Max./Min. code length: Refer to Max./Min. code length of 3-16 Code 39 (Code 32, Trioptic Code 39).

Code ID setting: Refer to Code ID setting of 3-11 UPC-A.

Insertion group selection: Refer to Insertion group selection of 3-11 UPC-A.

Multiple-scan setting			Single-scan setting
Option barcode	Option	Alpha. entry	
Read %2301M%	Disable	00*	%2301D00% *
	Enable	01	%2301D01%
Check digit verification %2302M%	Disable	00*	%2302D00% *
	1 digit (mod 10)	01	%2302D01%
	Reserved	02	%2302D02%
	Reserved	03	%2302D03%
Check digit transmission %2303M%	Disable	00*	%2303D00% *
	Enable	01	%2303D01%
Max. code length %2304M%	00-99	00-99	
		00*	%2304D00% *
Min. code length %2305M%	00-99	00-99	
		00*	%2305D00% *
Code ID setting %2306M%	00-FF_{16} (ASCII)	00-FF_{16}	
		<O>*	%2306H4F% *
Insert group selection %2307M%	00-66	00-66	
		00*	%2307D00% *

%END%

3-27 UK/Plessey

Read:

Format

Data digits (variable)	Check digits (2 digits, optional)

Check digit verification: The UK/Plessey has one or two optional check digits. The check digit 1 and check digit 2 will be calculated as the sum module 10 or 11 of the data digits.

Check digit transmission: By setting Enable, check digit will be transmitted.

Max./Min. code length: Refer to Max./Min. code length of 3-16 Code 39 (Code 32, Trioptic Code 39).

Code ID setting: Refer to Code ID setting of 3-11 UPC-A.

Insertion group selection: Refer to Insertion group selection of 3-11 UPC-A.

Multiple-scan setting			Single-scan setting
Option barcode	Option	Alpha. entry	
Read %2401M%	Disable	00*	%2401D00% *
	Enable	01	%2401D01%
Check digit verification %2402M%	Disable	00	%2402D00%
	Enable	01*	%2402D01% *
Check digit transmission %2403M%	Disable	00*	%2403D00% *
	Enable	01	%2403D01%
Max. code length %2404M%	00-99	00-99	
		00*	%2404D00% *
Min. code length %2405M%	00-99	00-99	
		01*	%2405D01% *
Code ID setting %2406M%	00-FF_{16} (ASCII)	00-FF_{16}	
		<U>*	%2406H55% *
Insert group selection %2407M%	00-66	00-66	
		00*	%2407D00% *
%END%			

3-28 China Post

Read:

Format

Data digits (11 digits)

Max. /Min. code length: Refer to Max./Min. code length of 3-16 Code 39 (Code 32, Trioptic Code 39).
The code length of China Post is 11.

Code ID setting: Refer to Code ID setting of 3-11 UPC-A.

Insertion group selection: Refer to Insertion group selection of 3-11 UPC-A.

Multiple-scan setting			Single-scan setting
Option barcode	Option	Alpha. entry	
Read %2601M%	Disable	00	%2601D00%
	Enable	01*	%2601D01% *
Max. code length %2604M%	00-99	00-99	
		11*	%2604D11% *
Min. code length %2605M%	00-99	00-99	
		11*	%2605D11% *
Code ID setting %2606M%	00-FF$_{16}$ (ASCII)	00-FF$_{16}$	
		<T>*	%2606H54% *
Insert group selection %2607M%	00-66	00-66	
		00*	%2607D00% *
%END%			

3-29 China Finance

Note: This type of barcode is not Omni-directionally decodable. The encodable character set includes numeric 0 to 9. Among the symbol of 0 to 9, 0 and 2, 4 and 9, 5 and 8, 6 and 7, have the symmetrical pattern; the pattern of 1 and 3 is symmetrical.

Read:

Format

Data digits (10 digits)

Max./Min. code length: Refer to Max./Min. code length of 3-16 Code 39 (Code 32, Trioptic Code 39).

Check digit verification: The check digit is made as the sum module 10 of the numerical values of all data digits.

Leading character 5/6/7/8/9 converted to A/B/C/D/E: By setting, leading character 5/6/7/8/9 can be converted to A/B/C/D/E.

Leading character assignment: By setting, only the barcode with the assigned leading character can be output.

Code ID setting: Refer to Code ID setting of 3-11 UPC-A.

Insertion group selection: Refer to Insertion group selection of 3-11 UPC-A.

Multiple-scan setting			Single-scan setting
Option barcode	Option	Alpha. entry	
Read %3201M%	Disable	00	%3201D00%
	Enable	01*	%3201D01% *
Max. code length %3202M%	00-99	00-99	
		10*	%3202D10% *
Min. code length %3203M%	00-99	00-99	
		10*	%3203D10% *
Check digit verification %3204M%	Disable	00*	%3204D00% *
	Reserved	01	%3204D01%
Leading character 5/6/7/8/9 converted to A/B/C/D/E %3205M%	Disable	00	%3205D00%
	Enable	01*	%3205D01% *
	Only 5 converted to A	02	%3205D02%

Multiple-scan setting			Single-scan setting
Option barcode	Option	Alpha. entry	
	Only 6 converted to B	03	%3205D03%
	Only 7 converted to C	04	%3205D04%
	Only 8 converted to D	05	%3205D05%
	Only 9 converted to E	06	%3205D06%
Leading character assignment %3206M%	Disable	00	%3206D00%
	Assigned to 0	01*	%3206D01% *
	Assigned to 5(A)	02	%3206D02%
	Assigned to 6(B)	03	%3206D03%
	Assigned to 7(C)	04	%3206D04%
	Assigned to 8(D)	05	%3206D05%
	Assigned to 9(E)	06	%3206D06%
	Assigned to 1	07	%3206D07%
	Assigned to 2	08	%3206D08%
	Assigned to 3	09	%3206D09%
	Assigned to 4	10	%3206D10%
Code ID setting %3207M%	$00\text{-}FF_{16}$ (ASCII)	$00\text{-}FF_{16}$	
		<Y>*	%3207H59% *
Insert group selection %3208M%	00-66	00-66	
		00*	%3208D00% *

%END%

3-30 GS1 DataBar (GS1 DataBar Truncated)

GS1 DataBar Truncated is structured and encoded the same as the standard GS1 DataBar format, except its height is reduced to a 13 modules minimum; while GS1 DataBar should have a height greater than or equal to 33 modules.

Read:

Format

Data digits (16 digits)

Code ID setting: Refer to Code ID setting of 3-11 UPC-A.

Insertion group selection: Refer to Insertion group selection of 3-11 UPC-A.

Conversion:

UCC/EAN 128- Refer to Code ID transmission of 3-42 String transmission,]Cm will be identified as AIM ID.

UPC-A or EAN-13- Barcode beginning with a single zero as the first digit has the leading "010" stripped and the barcode reported as EAN-13. Barcode beginning with two or more zeros but not six zeros has the leading "0100" stripped and the barcode reported as UPC-A.

Multiple-scan setting			Single-scan setting
Option barcode	Option	Alpha. entry	
Read %2701M%	Disable	00	%2701D00%
	Enable	01*	%2701D01% *
Code ID setting %2702M%	00-FF$_{16}$ (ASCII)	00-FF$_{16}$	
		<R>*	%2702H52% *
Insert group selection %2703M%	00-66	00-66	
		00*	%2703D00% *
Conversion %2704M%	None	00*	%2704D00% *
	UCC/EAN 128	01	%2704D01%
	UPC-A or EAN-13	02	%2704D02%

%END%

3-31 GS1 DataBar Limited

Read:

Format

Data digits (16 digits)

Code ID setting: Refer to Code ID setting of 3-11 UPC-A.

Insertion group selection: Refer to Insertion group selection of 3-11 UPC-A.

Conversion: Refer to Conversion of 3-30 GS1 DataBar (GS1 DataBar Truncated).

Multiple-scan setting			Single-scan setting
Option barcode	Option	Alpha. entry	
Read %2801M%	Disable	00	%2801D00%
	Enable	01*	%2801D01% *
Code ID setting %2802M%	00-FF$_{16}$ (ASCII)	00-FF$_{16}$	
		<R>*	%2802H52% *
Insert group selection %2803M%	00-66	00-66	
		00*	%2803D00% *
Conversion %2804M%	None	00*	%2804D00% *
	UCC/EAN 128	01	%2804D01%
	UPC-A or EAN-13	02	%2804D02%

%END%

3-32 GS1 DataBar Expanded

Read:

Format

Data characters (variable)

Code ID setting: Refer to Code ID setting of 3-11 UPC-A.

Insertion group selection: Refer to Insertion group selection of 3-11 UPC-A.

Conversion:

UCC/EAN 128- Refer to Code ID transmission of 3-42 String transmission,]Cm will be identified as AIM ID.

Multiple-scan setting			Single-scan setting
Option barcode	Option	Alpha. entry	
Read %2901M%	Disable	00	%2901D00%
	Enable	01*	%2901D01% *
Max. code length %2902M%	00-99	00-99	
		00*	%2902D00% *
Min. code length %2903M%	00-99	00-99	
		01*	%2903D01% *
Code ID setting %2904M%	00-FF$_{16}$ (ASCII)	00-FF$_{16}$	
		<R>*	%2904H52% *
Insert group selection %2905M%	00-66	00-66	
		00*	%2905D00% *
Conversion %2906M%	None	00*	%2906D00% *
	UCC/EAN 128	01	%2906D01%

%END%

3-33 GS1 Composite

GS1 Composite symbol group consists of two components: a linear component, which encodes the item's primary data; and an adjacent 2D composite component, which contains supplementary data.
The linear component will be a traditional symbol of types: GS-128, EAN-8, EAN-13, UPC-A, UPC-E or DataBar.
The composite component will be either a CC-A (encoding up to 56 digits), a CC-B (up to 338 digits) or a CC-C (up to 2361 digits).

GS1-128 Composite

(01) 0 0614141 99999 6

GS1 DataBar Stacked Composite

(01) 0 0614141 99999 6

GS1 DataBar Expanded Stacked Composite

(01) 0 0000000 00614 9 (10) ABCF1234 (21) 6543FEDC

GS1 DataBar Composite

(01) 0 0614141 99999 6

UPC-E Composite

04029311

EAN-13 Composite

2112345678917

GS1 composite version enabled:

- ✓ **Note 1-** While this feature is enabled, the decode speed will be dropped. The more versions are enabled, the more obvious influence.
- ✓ **Note 2-** If the corresponding linear 1D barcode symbol is set disable, only 2D composite data will be output after a success decode.
- ✓ **Note 3-** While this feature is set disable, if the corresponding linear 1D barcode symbol is set enable, only 1D data will be output after a success decode.
- ✓ **Note 4-** For UPC/EAN Composite, if 2D composite component is failed to decode and 1D linear component is successful to decode, then only 1D data will be output.
- ✓ **Note 5-** If both GS-128 and DataBar Composite are set Enable, both 1D and 2D components

must be successfully decoded to output both 1D and 2D data.

GS1-128 Composite, DataBar Composite- Two versions of GS1 Composite symbol are enabled.

GS1-128 Composite, DataBar Composite, UPC/EAN Composite- Three versions of GS1 Composite symbol are enabled.

Multiple-scan setting			Single-scan setting
Option barcode	Option	Alpha. entry	
GS1 composite version enabled %3501M%	None (Disable)	00*	%3501D00% *
	GS1-128 Composite, DataBar Composite	01	%3501D01%
	GS1-128 Composite, DataBar Composite, UPC/EAN Composite	02	%3501D02%

%END%

3-34 PDF417

Read:

Format

Data characters (variable)

Multiple-scan setting			Single-scan setting
Option barcode	Option	Alpha. entry	
Read %3001M%	Disable	00	%3001D00%
	Enable	01*	%3001D01% *

%END%

3-35 MicroPDF417

Read:

Format

Data characters (variable)

Multiple-scan setting			Single-scan setting
Option barcode	Option	Alpha. entry	
Read %3101M%	Disable	00*	%3101D00% *
	Enable	01	%3101D01%

%END%

3-36 QR Code

Read:

Format

Data characters (variable)

Multiple-scan setting			Single-scan setting
Option barcode	Option	Alpha. entry	
Read %4001M%	Disable	00	%4001D00%
	Enable	01*	%4001D01% *

%END%

3-37 Data Matrix

Read:

Format

Data characters (variable)

Multiple-scan setting			Single-scan setting
Option barcode	Option	Alpha. entry	
Read %4101M%	Disable	00	%4101D00%
	Enable	01*	%4101D01% *

%END%

3-38 Han Xin Code

Read:

Format

Data characters (variable)

Multiple-scan setting			Single-scan setting
Option barcode	Option	Alpha. entry	
Read %4201M%	Disable	00*	%4201D00% *
	Enable	01	%4201D01%

%END%

3-39 Aztec Code

Read:

Format

Data characters (variable)

Multiple-scan setting			Single-scan setting
Option barcode	Option	Alpha. entry	
Read %4301M%	Disable	00*	%4301D00% *
	Enable	01	%4301D01%

%END%

3-40 G1-G6 & C1-C3 & FN1 substitution string setting

Format of barcode data transmission:

Prefix	Code name	Preamble	Code ID	Code length	Code data	Code ID	Postamble	Suffix

Suffix string setting: The <enter > key is represented in different ASCII when it is applied by different OS. For a Windows/DOS OS, <enter> is represented as <CR><LF> (0x0D 0x0A); for an Apple MAC OS, <enter> is represented as <CR> (0x0D); for a Linux/Unix OS, <enter> is represented as <LF> (0x0A).

Prefix/Suffix/Preamble/Postamble string setting:

They are appended to the data automatically when a barcode is decoded.

Example: Add a symbol of "$" as a prefix for all symbols.

Steps:

1) Scan the option barcode of Prefix string setting.
2) Use the ASCII table to find the value of $→24.
3) Scan 2 and 4 from the barcode on the last page.
4) Scan END barcode.

Scanning steps: Scan the following barcodes in order.

OR

%8001H24%8201D01%

Insert G1/G2/G3/G4 string setting: The image platform offers 4 positions and 4 character strings to insert among the symbol.

Example: Set G1 string to be "AB".

Original code data	"1 2 3 4 5 6"
Output code data	"1 2 A B 3 4 5 6"

Steps:

1) Scan the option barcode of Insert G1 string setting.
2) Use the ASCII table to find the value of A→41, B→42.
3) Scan 4, 1 and 4, 2 from the barcode on the last page.
4) Scan END barcode.
5) Refer to 3-41 G1-G4 string position & Code ID position.
6) Refer to 3-6 Scan mode & some global settings.

OR

%8005H4142

%8101D02

%0407D01%

Testing barcode:

123456

FN1 substitution string setting: The FN1 character (0x1D) in an UCC/EAN128 barcode, or a Code 128 barcode, or a GS1 DataBar barcode can be substituted with a defined string.

Truncate leading G5 string setting: By setting, a defined leading character or string can be truncated. Also a single character can be un-defined.

Repeat of a G5 character setting: While G5 is set as a single defined/un-defined character, G5 can also be set to be repeated. This setting is ignored when the truncate number is more than the barcode data characters. The option of "FF" for this setting is not active while the option of Truncate leading G5 string setting is "00".

Example: Truncate all leading zeros for all symbols.

Original code data	"0 0 0 1 2 3 4 5 6"
Output code data	"1 2 3 4 5 6"

Steps: scan the following data in order.

%8010M% 3 0 %END%

%8011M% F F %END%

%0407M% 0 5 %END%

OR

%8010H30

%8011HFF

%0407D05%

Testing barcode:

000123456

Truncate ending G6 string setting: By setting, a defined ending character or string can be truncated. Also a single character can be un-defined.

Repeat of a G6 character setting: While G5 is set as a single defined/un-defined character, G6 can also be set to be repeated. This setting is ignored when the truncate number is more than the barcode data characters. The option of "FF" for this setting is not active while the option of Truncate ending G6 string setting is "00".

Single character C1/C2 replacement: By setting, a defined character in the data string can be replaced by another defined character. The C1 and C2 replacement can be applied simultaneously.

Example: Replace all the "A" character in a data string with "B" character.

Original code data	"1 2 3 A 5 A"
Output code data	"1 2 3 B 5 B"

Steps: scan the following barcodes in order. The ASCII value for "A" is 41, and the ASCII value for "B" is 42.

%8014M%
4
1
4
2
%END%

OR

%8014H4142%

Testing barcode:

123A5A

Multiple characters C3 replacement: By setting, a number of defined characters in the data string can be replaced by other defined characters. The maximum number of characters to replace is 11.

Example: Replace all the “A” character in a data string with “B” character; replace “C” with “D”; replace “E” with “F”.

Original code data	“1 2 3 A 4 C 5 6 E 7 8”
Output code data	“1 2 3 B 4 D 5 6 F 7 8”

Steps: scan the following barcodes in order. The ASCII value for “A” is 41, for “B” is 42, for “C” is 43, for “D” is “44”, for “E” is 45, and for “F” is 46.

%8016M%
4
1
4
2
4
3
4
4
4
5
4
6
%END%

OR

%8016H414243444546%

Testing barcode:

123A4C56E78

Multiple-scan setting			Single-scan setting
Option barcode	Option	Alpha. Entry	
Prefix string setting %8001M%	0-22 characters	00-FF$_{16}$	
	None	00*	%8001H00% *
Suffix string setting %8002M%	0-22 characters	00-FF$_{16}$	
	<ENTER>	0D0A*	
Preamble string setting %8003M%	0-22 characters	00-FF$_{16}$	
	None	00*	%8003H00% *
Postamble string setting %8004M%	0-22 characters	00-FF$_{16}$	
	None	00*	%8004H00% *
Insert G1 string setting %8005M%	0-22 characters	00-FF$_{16}$	
	None	00*	%8005H00% *
Insert G2 string setting %8006M%	0-22 characters	00-FF$_{16}$	
	None	00*	%8006H00% *
Insert G3 string setting %8007M%	0-22 characters	00-FF$_{16}$	
	None	00*	%8007H00% *
Insert G4 string setting %8008M%	0-22 characters	00-FF$_{16}$	
	None	00*	%8008H00% *
FN1 substitution string setting %8009M%	0-4 characters	00-FF$_{16}$	
	<SP>	20*	%8009H20% *
Truncate leading G5 string setting %8010M%	A un-defined character	00	%8010H00%
	1-22 defined characters	01-7F$_{16}$	
	<0>	30*	%8010H30% *

Multiple-scan setting			Single-scan setting
Option barcode	Option	Alpha. Entry	
Repeat of a G5 character setting %8011M%	Once	01*	%8011H01% *
	Defined times	01-22	
	Un-defined times (All)	FF	%8011HFF%
Truncate ending G6 string setting %8012M%	A un-defined character	00	%8012H00%
	1-22 defined characters	$01\text{-}7F_{16}$	
	<0>	30*	%8012H30% *
Repeat of a G6 character setting %8013M%	Once	01*	%8013H01% *
	Defined times	01-22	
	Un-defined times (All)	FF	%8013HFF%
Single character C1 replacement %8014M%	<0000>	0000_{16}*	
		$0000\text{-}FFFF_{16}$	
Single character C2 replacement %8015M%	<0000>	0000_{16}*	
		$0000\text{-}FFFF_{16}$	
Multiple characters C3 replacement %8016M%	-	0000_{16}*	
		-	

%END%

3-41 G1-G4 string position & Code ID position

Format of barcode data transmission:

Prefix	Code name	Preamble	Code ID	Code length	Code data	Code ID	Postamble	Suffix

Insert G1/G2/G3/G4 string position: The image platform offers 4 positions to insert strings among the symbol. In case of the insertion position is greater than the length of the symbol, the insertion of string is not effective.

Code ID position: It is allowed to select different positions of code ID placement.

Multiple-scan setting			Single-scan setting
Option barcode	Option	Alpha. entry	
Insert G1 string position %8101M%	00-99	00-99	
		00*	%8101D00% *
Insert G2 string position %8102M%	00-99	00-99	
		00*	%8102D00% *
Insert G3 string position %8103M%	00-99	00-99	
		00*	%8103D00% *
Insert G4 string position %8104M%	00-99	00-99	
		00*	%8104D00% *
Code ID position %8105M%	Before code data	00*	%8105D00% *
	After code data	01	%8105D01%

%END%

3-42 String transmission

Note: The information in this chapter is closely related to the chapter of String setting.

Format of barcode data transmission:

Prefix	Code name	Preamble	Code ID	Code length	Code data	Code ID	Postamble	Suffix

Prefix transmission: By setting Enable, prefix will be appended before the data transmitted.

Suffix transmission: By setting Enable, suffix will be appended after the data is transmitted.

Code name transmission: By setting Enable, code name will be transmitted before code data.

Preamble transmission: By setting Enable, preamble will be appended before the data transmitted.

Postamble transmission: By setting Enable, postamble will be appended after the data is transmitted.

Code ID transmission: Code ID can be transmitted in the format of either Proprietary ID or AIM ID. Refer to 1-2 Default setting for each barcode.

Code length transmission: The length of code data string can be transmitted before the code data when Enable is selected. The length is represented by a number with two digits.

Case conversion: The characters within code data or the whole output string can be set in either upper case or lower case.

FN1 substitution transmission: The image platform supports a FN1 substitution feature for keyboard wedge, USB and RS-232 interface. The replacement string of FN1 can be chosen by user (see 3-40 G1-G6 & C1-C3 & FN1 substitution string setting).

All-non-printable-character string transmission with string setting: By setting enable, all string settings, e.g. Preamble transmission or Insert G1 string setting, are active for an all-non-printable-character string. Here a non-printable character means a character with ASCII value between 0x00 to 0x1F.

Transmit the first N data characters only: The image platform supports to only transmit the first N data characters of a barcode. The number of N can be set as a digit between 1 and 99.

Transmit the last N data characters only: The image platform supports to only transmit the last N data characters of a barcode. The number of N can be set as a digit between 1 and 99.

Multiple-scan setting			Single-scan setting
Option barcode	Option	Alpha. entry	
Prefix transmission %8201M%	Disable	00*	%8201D00% *
	Enable	01	%8201D01%
Suffix transmission %8202M%	Disable	00	%8202D00%
	Enable	01*	%8202D01% *
Code name transmission %8203M%	Disable	00*	%8203D00% *
	Enable	01	%8203D01%
Preamble transmission %8204M%	Disable	00*	%8204D00% *
	Enable	01	%8204D01%
Postamble transmission %8205M%	Disable	00*	%8205D00% *
	Enable	01	%8205D01%
Code ID transmission %8206M%	Disable	00*	%8206D00% *
	Proprietary ID	01	%8206D01%
	AIM ID	02	%8206D02%
Code length transmission %8207M%	Disable	00*	%8207D00% *
	Enable	01	%8207D01%
Case conversion %8208M%	Disable	00*	%8208D00% *
	Upper (data only)	01	%8208D01%
	Lower (data only)	02	%8208D02%
	Upper (whole string)	03	%8208D03%
	Lower (whole string)	04	%8208D04%
FN1 substitution transmission	Disable	00*	%8209D00% *

Multiple-scan setting			Single-scan setting
Option barcode	Option	Alpha. entry	
%8209M%	Keyboard wedge/USB	01	%8209D01%
	RS-232	02	%8209D02%
	Keyboard wedge / USB / RS-232	03	%8209D03%
All-non-printable-character string transmission with string setting %8210M%	Disable	00*	%8210D00% *
	Enable	01	%8210D01%
Transmit the first N data characters only %8211M%	All	99*	%8211D99% *
	01-99		
Transmit the last N data characters only %8212M%	All	99*	%8212D99% *
	01-99		

%END%

4 Maintenance

Cleaning the scan window is the only maintenance required. A dirty window may affect scanning accuracy.

1. Do not allow any abrasive material to touch the window.
2. Remove any dirt particles with a damp cloth.
3. Wipe the window using a tissue moistened with water.
4. Do not spray water or other cleaning liquids directly into the window.
5. Use a piece of soft and dry cloth when cleaning the image platform.

5 Barcode representing non-printable character

Notes to make the following barcode:

1. According to different barcode printing software, the method of printing following barcode is different.
2. If using CODESOFT software, firstly read the information through “Help→Index→Code128→Special input syntax”. Also refer to ASCII table. For example, if we wish to make “F1” barcode, select “CODE 128”, then select “CODE A” type, and input “{DC1}” as data.

Up ↑

Down ↓

Left ←

Right →

Page Up

Page Down

Backspace

Tab

Home

End

Enter

Insert

Delete

F1

F2

F3

F4

F5

F6

F7

F8

F9

F10

Esc

F11

F12

6 ASCII Table

	for keyboard wedge		for RS-232	
H / L	0	1	0	1
0	Null		NUL	DLE
1	Up	F1	SOH	DC1
2	Down	F2	STX	DC2
3	Left	F3	ETX	DC3
4	Right	F4	EOT	DC4
5	PgUp	F5	ENQ	NAK
6	PgDn	F6	ACK	SYN
7		F7	BEL	ETB
8	Bs	F8	BS	CAN
9	Tab	F9	HT	EM
A		F10	LF	SUB
B	Home	Esc	VT	ESC
C	End	F11	FF	FS
D	Enter	F12	CR	GS
E	Insert	Ctrl+	SO	RS
F	Delete	Alt+	SI	US

Notes: The 2nd and the 3rd columns above are used for keyboard wedge only.

H / L	2	3	4	5	6	7
0	SP	0	@	P	`	p
1	!	1	A	Q	a	q
2	“	2	B	R	b	r
3	#	3	C	S	c	s
4	$	4	D	T	d	t
5	%	5	E	U	e	u
6	&	6	F	V	f	v
7	‘	7	G	W	g	w
8	(	8	H	X	h	x
9	)	9	I	Y	i	y
A	*	:	J	Z	j	z
B	+	;	K	[	k	{
C	,	<	L	\	l	|
D	-	=	M	]	m	}
E	.	>	N	^	n	~
F	/	?	O	_	o	DEL

Example: ASCII “A” = “41”.

7 Test barcode

UPC-A

6 59871 23231 9

UPC-E

0 232310 7

UPC-E1

1 2 3 2 3 1 0 4

EAN-8

0123 4510

EAN-13

1 234567 891019

Code 39

0189-.+$AZ

Code 32

A908765439

Code 128

01AZ[+-*/]za98

Interleaved 2 of 5

0123456789

Industrial 2 of 5

(Default setting: Read disable)

0123456789

Matrix 2 of 5

9876543210

Code 93

01AZ+-/*az89

UCC/EAN 128

01AZ[}+-az54

Code 11

(Default setting: Read disable)

123456789-0

MSI/Plessey

(Default setting: Read disable)

0123456789

UK/Plessey

01ABEF89

ISBN/ISSN

9 780194 315104

China Post

54789632145

GS1 DataBar (GS1 DataBar Truncated)

1234567890123

GS1 DataBar Limited

987654321012

GS1 DataBar Expanded

Ab_09+yZ

PDF417

12=890ab-+%xyz

MicroPDF417

0239+-mdo

QR code

1234567890ABCD-+()&*%^@#$!XYZ

Data Matrix

123890abc-+=&*%^!mdo

Aztec Code

12345678901234567890

Han Xin Code

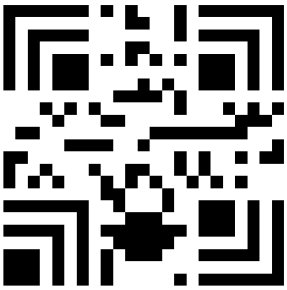

12345678901234567890

8 Return default parameters & firmware version

%%%DEF

WARNING: Default value initialization

If you wish to return the image platform to all the factory default settings, scan the barcode above.

%%%VER

Firmware version list

If you wish to display the firmware version, scan the barcode above.

9 Configuration alphanumeric entry barcode

0

1

2

3

4

5

6

7

8

9

A

B

C

D

E

F

To finish parameter setting, please scan the bar code below.

%END%